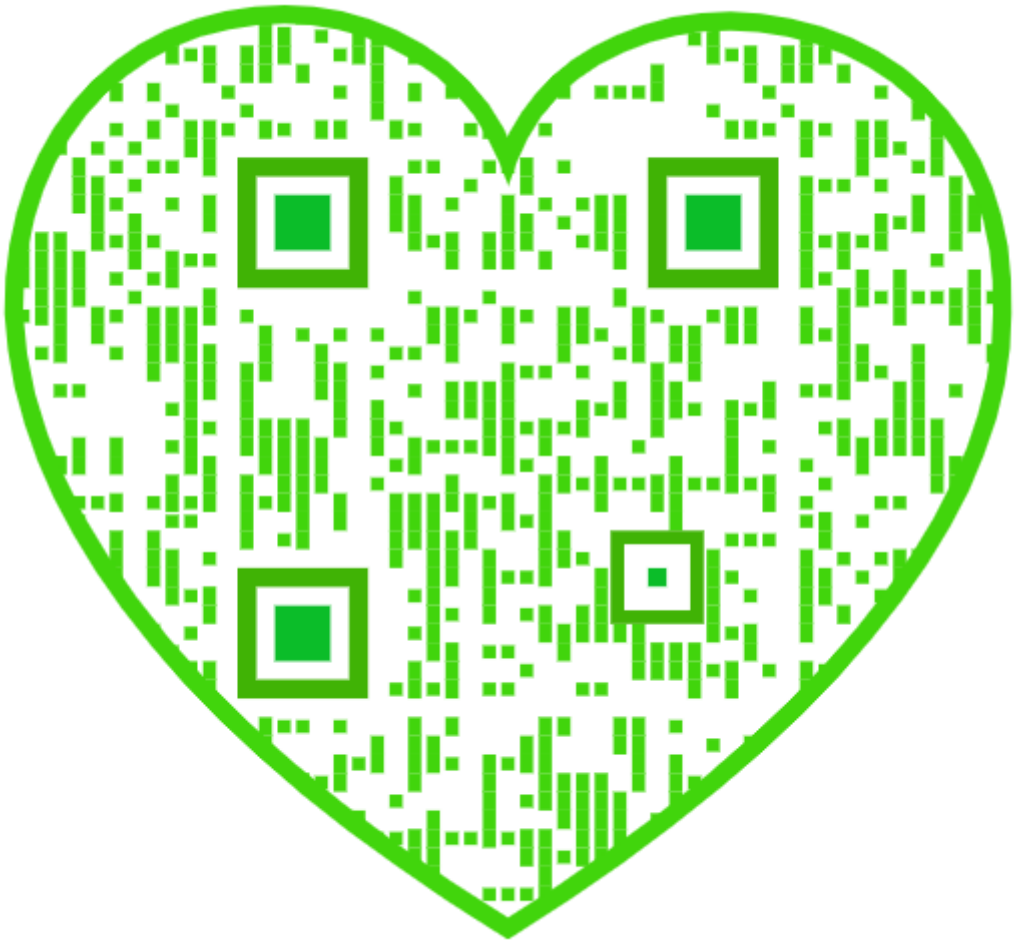

THE LIBRARY
OF
THE UNIVERSITY
OF CALIFORNIA
LOS ANGELES

GIFT OF

R. L. Huntley

R. L. Hunter
Aug 6th 1930

STEAM-ENGINE THEORY AND PRACTICE

BY THE SAME AUTHOR

Crown 8vo.

Heat Engines. With numerous Illustrations and an Appendix of Questions and Exercises.

LONGMANS, GREEN AND CO.
LONDON, NEW YORK, TORONTO, BOMBAY, CALCUTTA AND MADRAS.

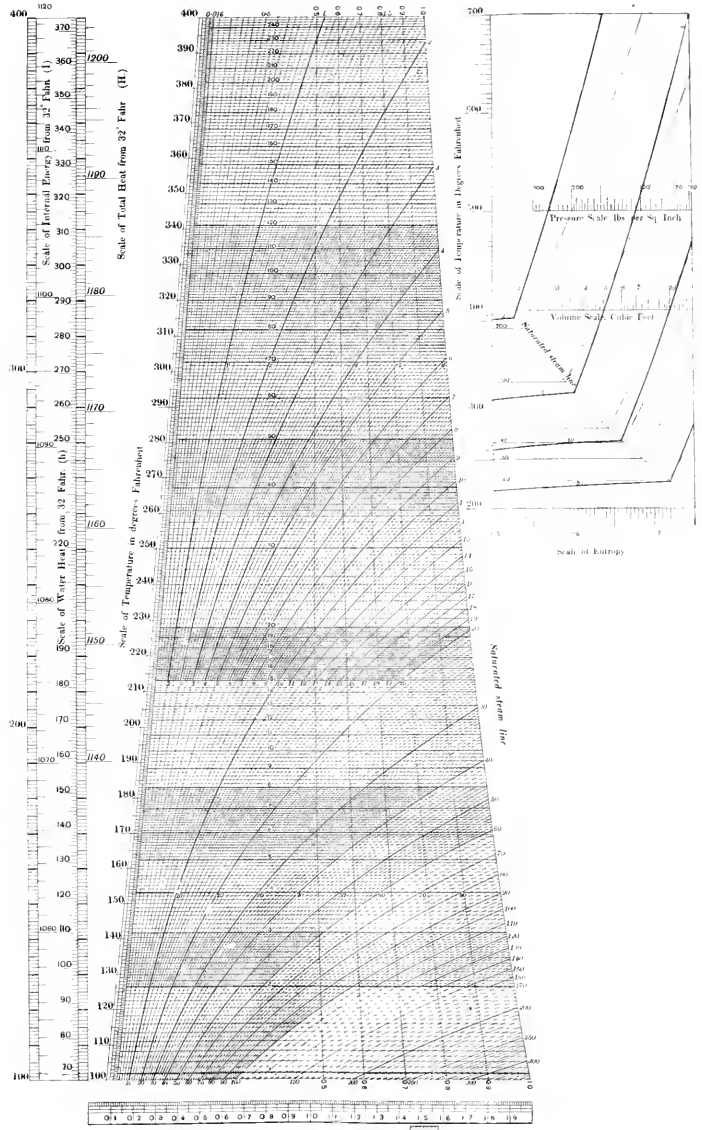
Scale of Internal Energy from 32° Fahr. (I)
Scale of Total Heat from 32° Fahr. (H)
Scale of Water Heat from 32° Fahr. (h)
Scale of Temperature in degrees Fahrenheit
Scale of Temperature in Degrees Fahrenheit
Pressure Scale lbs. per Sq. Inch
Volume Scale Cubic Feet
Saturated steam line
Superheated steam lines
Scale of Entropy
One British Thermal unit is represented by this area
or 0·1 sq. inch
Volumes in cubic feet are figured thus
Absolute pressures in lbs. per sq. inch are figured thus
Dryness fractions are figured thus .06

STEAM-ENGINE
THEORY AND PRACTICE

BY

WILLIAM RIPPER, C.H.

D.ENG. (SHEFFIELD), HON. D.SC. ENG. (BRISTOL)

MEMBER OF THE INSTITUTION OF CIVIL ENGINEERS
MEMBER OF THE INSTITUTION OF MECHANICAL ENGINEERS
PROFESSOR OF ENGINEERING AND LATE VICE-CHANCELLOR OF
THE UNIVERSITY OF SHEFFIELD

WITH 496 ILLUSTRATIONS

NEW IMPRESSION

LONGMANS, GREEN AND CO.
39 PATERNOSTER ROW, LONDON, E.C.4
NEW YORK, TORONTO
BOMBAY, CALCUTTA AND MADRAS
1922

All rights reserved

BIBLIOGRAPHICAL NOTE

First Edition	*November, 1899*
Second Edition	*August, 1901*
Third Edition	*October, 1903*
Fourth Edition	*October, 1905*
Fifth Edition	*January, 1908*
Reprinted	*November, 1909*
Sixth Edition	*June, 1912*
Reprinted	*March, 1920*
Reprinted	*July, 1922*

Engineering
Library

TO

SIR FREDERICK MAPPIN, BART., M.P.

CHAIRMAN OF THE TECHNICAL DEPARTMENT OF THE

UNIVERSITY COLLEGE OF SHEFFIELD

AS A

TRIBUTE TO HIS LONG AND VALUED SERVICES

IN PROMOTING THE STUDY OF SCIENCE

AS APPLIED TO INDUSTRY

THIS BOOK

IS INSCRIBED BY THE AUTHOR

PREFACE

THIS book is written as a sequel to the author's elementary book on "Steam." It was prepared in the first instance as notes for the second-year engineering students in this college, and deals, in as simple a form as possible, with those branches of the subject which are of fundamental importance to a sound knowledge of steam-engine design and management.

Modern students of steam engineering have a great advantage over their predecessors, in possessing such a wealth of recorded practical experience as appears in the *Proceedings* of the Engineering Institutions, as well as in the Technical Journals, and the writer has to express his personal indebtedness to all these sources of information in the preparation of this book. The assistance received is acknowledged, as far as possible, throughout.

Special attention has been given to the subject of the heat quantities involved in the generation and use of steam. For this purpose the temperature-entropy diagram has been used, and its applications in the solution of a number of ordinary everyday problems exemplified.

In this connection, as well as for many beautiful graphical methods of illustration now employed by engineers, students and teachers of the subject are greatly indebted to the work of Mr. J. Macfarlane Gray, Capt. H. Riall Sankey, the late P. W. Willans, and many others. The writer desires to express his personal indebtedness to Capt. Sankey for his kindness in supplying him with copies of his temperature-entropy chart, which appears for the first time, as Plate I. of this book. This chart has gone through an interesting process of evolution since the occasion when Mr. J. Macfarlane Gray read his paper at the Paris meeting of the Institution of Mechanical Engineers in July, 1889,

"On the Rationalization of Regnault's Steam Experiments," describing and explaining the use of the steam and water lines of the temperature-entropy chart. Since that time Capt. Sankey has added lines of constant pressure, and constant volume in 1892; and more recently also the scales of total heat and internal energy, as well as the chart for the superheated-steam field. All these additions now appear upon the chart as shown in Plate I. of this book.

Other subjects dealt with include the compound engine, superheated steam, and superheaters, the use of high steam-pressures, valve gears, steam-engine governors, flywheels, and other engine details. There are also chapters on the balancing of engines, and steam-engine performance, embodying the most recent results obtained from all classes of engines; and on modern steam-engine design, including the Corliss mill engine, the modern quick-revolution engine, the marine engine, and the locomotive.

The author here desires to express his acknowledgments to Mr. T. Scott King for the valuable original designs, both of engine details and complete engines, which he has prepared for the author specially for this book; also to Mr. J. W. Kershaw, M.Sc., for much valuable help, and to Mr. F. Boulden for kindly reading the proof-sheets.

W. RIPPER.

UNIVERSITY COLLEGE, SHEFFIELD,
November, 1899.

PREFACE TO THE FOURTH EDITION

In the present edition a new chapter is added on the Steam Turbine, and a very full series of Questions with Answers has been appended, which covers the requirements of the various public examinations on Steam, including the examinations of the Institution of Civil Engineers, the Universities, and the Board of Education, Honours Stages.

W. RIPPER.

The University, Sheffield,
September, 1905.

SIXTH EDITION

Considerable additions have been made to the chapter on the Steam Turbine. The Total Heat-entropy Chart introduced by Dr. Mollier has also been added, and its application to various practical problems in Steam Turbine work has been explained and illustrated.

The author is indebted to the British Westinghouse Co., the Brush Electrical Engineering Co, and Messrs. G. and J. Weir for kindly supplying diagrams, and to Mr. J. W. Kershaw, M.Sc. B.Eng., for much valuable assistance.

April, 1912.

SEVENTH EDITION

Experience of the requirements of students preparing for University and other examinations in Steam Engineering has suggested the addition to this new edition of much valuable matter to the Questions at the end of the book, which it is believed will be of great service to the private student. The additions consist of a large number of fully worked-out typical examples, carefully classified, and fairly fully covering the field of the subject required of the student by the Professional Institutions.

W. RIPPER.

University of Sheffield,
July, 1914.

CONTENTS

		PAGE
	INTRODUCTORY	1
CHAPTER		
I.	THERMODYNAMICS OF GASES	5
II.	PROPERTIES OF STEAM	25
III.	TEMPERATURE-ENTROPY DIAGRAMS	41
IV.	THE SLIDE-VALVE	60
V.	THE INDICATOR	90
VI.	QUALITY OF THE STEAM IN THE CYLINDER	110
VII.	COMPOUND ENGINES	125
VIII.	SUPERHEATED STEAM	146
IX.	INTERNAL SURFACE OF ENGINE CYLINDERS	164
X.	THE STEAM-JACKET	166
XI.	THE INJECTOR	172
XII.	CONDENSERS	179
XIII.	FEED-WATER HEATERS	191
XIV.	GOVERNORS	200
XV.	TURNING EFFORT IN THE CRANK-SHAFT	227
XVI.	FLYWHEELS	245
XVII.	ENGINE DETAILS	252
XVIII.	FRICTION OF ENGINES	275
XIX.	BALANCING THE ENGINE	277
XX.	STEAM-ENGINE PERFORMANCE	300
XXI.	TYPES OF STEAM-ENGINES—THE MILL ENGINE	320
XXII.	THE CORLISS ENGINE	331

CHAPTER PAGE
XXIII. Quick-revolution Engines 348
XXIV. The Marine Engine 363
XXV. The Locomotive 368
XXVI. The Steam Turbine 385

APPENDIX

I. Ripper's Mean-pressure Indicator 451
II. Saturated-steam Tables 453
III. Saturated-steam Tables 455
IV. Condenser Temperatures and Pressures 456
V. Table of Mean-pressure Ratios 457
VI. Table of Entropy 458

QUESTIONS WITH SOLUTIONS 459
INDEX 511

LIST OF PLATES

PLATE
I. The Temperature-entropy Chart . . . . *Frontispiece*
II. Quick-revolution Engines . . . . . *To face* 358
III. Marine Engines . . . . . ,, 366
IV. The Locomotive . . . . . ,, 372
V. Total Heat-entropy Diagram . . . . . ,, 490

STEAM-ENGINE THEORY AND PRACTICE

INTRODUCTORY.

DEFINITIONS AND UNITS.

Work is defined as the overcoming of a resistance through a space by the application of a force, and the amount of work (U) done is measured by the resistance (R) or the force (F) in pounds, multiplied by the distance (S) in feet through which the resistance is overcome or through which the force acts; and the product is given in foot-pounds, thus:

$$U = RS = FS \text{ foot-lbs.}$$

The **unit of work** is the foot-pound, or the work done by a force of one pound acting through the space of one foot.

The unit of work in metric units is the work done by the force of one kilogramme acting through the space of one metre = one kilogrammetre;

$$1 \text{ kilogrammetre} = 7{\cdot}233 \text{ foot-lbs.}$$

When the motion takes place round a fixed axis, as in the case of a crank, then the mean resistance (R) multiplied by the space traversed ($2\pi r$ feet per revolution) gives the work done, and—

$$U = 2\pi rR \text{ foot-lbs. per revolution.}$$

When work is done by pressure upon a moving piston, as in steam-engines, it is measured by the product of the mean pressure p per square inch, the area of the piston A in square inches, and the length of stroke of the piston S in feet; then—

$$U = pAS \text{ foot-lbs. per stroke}$$

or, if A be expressed in square feet, then the pressure per square foot $P = p \times 144$, and—

$$U = p \times 144 \times A \times S$$

But $A \times S = V$ = volume of piston displacement in cubic feet;

$$\therefore U = p \times 144 \times V = PV$$

and if area of piston be 1 sq. ft., then V in cubic feet will be numerically equal to the length of stroke of the piston in feet.

Work represented by an Area.—Since work is expressed as a product of two numbers, it may therefore be represented by the area of a plane figure; thus the work done on the piston of the steam-engine is represented by an area drawn by an "indicator," the length of the diagram corresponding with the length of stroke of the piston to a reduced scale, and the mean height of the diagram giving the mean pressure on the piston throughout the stroke.

Efficiency.—The total amount of energy received by an engine or machine of any kind is either used in the doing of *useful work* or is wasted, and—

$$\text{energy received} = \text{useful work} + \text{lost work}$$

$$\text{efficiency} = \frac{\text{useful work done}}{\text{total energy received}}$$

Power is defined as the "rate of expenditure of energy," or the amount of work performed in a unit of time—

$$\text{power} = \text{pounds} \times \text{feet} \div \text{minutes}$$

The Horse-power.—The unit of power used by British engineers is the "horse-power," which is equivalent to the performance of 33,000 foot lbs. of work per minute; or $33{,}000 \div 60 = 550$ foot-lbs. per second; or $33{,}000 \times 60 = 1{,}980{,}000$ foot-lbs. per hour. In heat-units the horse-power $= 33{,}000 \div 778 = 42{\cdot}42$ B.T.U. (British thermal units) per minute, or $= 42{\cdot}42 \times 60 = 2545$ B.T.U. per hour.

The French horse-power (cheval) is 75 kilogrammetres per second $= 75 \times 7{\cdot}233$ foot-lbs. $= 542{\cdot}5$ foot-lbs. per second, or rather less than the British horse-power.

1 horse-power	= 1·0139 cheval
1 lb. per horse-power	= 0·447 kilogramme per cheval
1 kilogramme per cheval	= 2·235 lbs. per horse-power.

Indicated Horse-power is the work done by the steam in the cylinder as obtained by the aid of the indicator, and expressed in horse-power units. This power includes, of course, that necessary to drive the engine against external resistance, and that used to overcome the frictional resistance of the engine itself.

$$\text{I.H.P.} = \frac{\text{units of work done per minute}}{33{,}000} = \frac{\text{PLAN}}{33{,}000}$$

where P = mean effective pressure in pounds per square inch on piston.

A = effective area of piston in square inches.
= (diameter of cylinder in inches)$^2 \times 0{\cdot}7854$ less area of piston-rod.

L = length of stroke in feet, or distance travelled by piston from end to end of cylinder.

N = number of strokes per minute, or } for double-acting
= number of revolutions $\times$ 2 } engines.
= number of revolutions, for single-acting engines.
= number of *impulses* per minute, for gas-engines.

EXAMPLE 1.—Find the indicated horse-power of an engine with

a cylinder 12 in. diameter, length of stroke 18 in., number of revolutions per minute 90, mean effective pressure per square inch on piston 40 lbs.

$$\text{Then I.H.P.} = \frac{\text{PLAN}}{33{,}000}$$
$$= \frac{(\text{P} \times \text{A}) \text{ lbs.} \times (\text{L} \times \text{N}) \text{ ft. per min.}}{33{,}000}$$
$$= \frac{(40 \times 12 \times 12 \times 0{\cdot}7854) \text{ lbs} \times (1{\cdot}5 \times 90 \times 2) \text{ ft. per min.}}{33{,}000}$$
$$= \frac{4520 \text{ lbs.} \times 270 \text{ ft. per min.}}{33{,}000}$$
$$= 37 \text{ nearly}$$

EXAMPLE 2.—An engine is required to indicate 37 horse-power with a mean effective pressure on piston of 40 lbs. per square inch, length of stroke 18 in., number of revolutions per minute 90: find the diameter of the cylinder.

First find the *area* from the formula—

$$\text{I.H.P.} = \frac{\text{PLAN}}{33{,}000}$$
$$\text{A} = \frac{33{,}000 \text{ I.H.P.}}{\text{P} \times \text{L} \times \text{N}}$$
$$= \frac{33{,}000 \times 37}{40 \times 1{\cdot}5 \times 90 \times 2}$$

A, or area of piston, = 113 sq. in.

From which the diameter may be obtained thus:

$$\text{Diameter} = \sqrt{\frac{\text{area}}{0{\cdot}7854}} = \sqrt{\frac{113}{0{\cdot}7854}} = \sqrt{144} = 12 \text{ in.}$$

Brake Horse-power (B.H P.) represents the power which the engine is capable of transmitting for the purposes of useful work, that is, the total power exerted by the steam in the cylinder less the power absorbed in driving the engine itself.

This power is measured—except where the engines are too large—by means of a brake dynamometer.

$$\frac{\text{B.H.P.}}{\text{I.H.P.}} = \text{mechanical efficiency of engine}$$

The efficiency of a whole machine is the product of the efficiencies of its several parts.

Practical Electrical Units—

Ampère = the unit of strength of current, or rate of flow.
Volt = the unit of electro motive force.
Ohm = the unit of resistance.
Coulomb = (ampère-second) = the unit of quantity.
1 watt = 1 ampère × 1 volt = the unit of power.

1 watt = 0·7373 foot-lbs. per second
= 0·0009477 heat-units per second (Fahr.)
= $\frac{1}{746}$ horse-power.

1 kilowatt, or 1000 watts, = 0·9477 heat-units per second
= 1·3405 horse-power.

1 horse-power = 746 watts = 746 volt-ampères.

$$\frac{\text{volts} \times \text{ampères}}{746} = \text{electrical horse-power.}$$

1 electrical unit = 1000 watt-hours.

Other Useful Constants—

1 cub. ft. of water weighs 62·3 lbs.
1 gallon = 0·1605 cub. ft. = 10 lbs. of water at 62° F.
A column of water 2·3 ft. high corresponds to a pressure of 1 lb. per sq. in.
1 knot = 6080 feet per hour.
1 inch = 25·4 millimetres.
1 metre = 39·37 inches.
1 cubic metre = 35·32 cubic feet.
1 kilogramme = 2·2 lbs.
1 lb. = 7000 grains = 453·6 grammes.
1 lb. per sq. in. = 0·0703 kilogramme per sq. cm.
1 kilo. per sq. cm. = 14·223 lbs. per sq. in.
1 lb. of air at 0° C. and at atmospheric pressure = 12·387 cub. ft.
1 cub. ft. of air at 0° C. and at atmospheric pressure weighs 0·0807 lb.

CHAPTER I.

THERMODYNAMICS OF GASES.

Heat.—Heat is a form of molecular energy, and it may be converted into mechanical work by means of the change of volume which it produces in bodies acted upon by it. The medium through which work is done by the action of heat may be either solid, liquid, or gaseous, and the nature of the substance used is a question of relative convenience or suitability. Thus, if an iron bar be heated, the bar expands, and if some form of resistance be interposed to its expansion, then the work done in overcoming the resistance = U = R × S, where R may represent an enormous force, and S a very small space.

On the other hand, if a gas be used as the "working fluid," and be heated in a closed cylinder behind a movable piston, then the work done by the heat through the expanding gas = U = R × S, as before, where the resistance is comparatively small, and the space S moved through by the piston is comparatively large.

Engineers generally utilize the smaller forces acting through large distances, rather than unmanageably large forces acting through small distances.

If a quantity of heat (Q) be applied to unit weight of any substance, it increases the energy contained in the substance, and its effects may in general be divided as follows: (1) It raises the temperature of the body; that is, it increases the rate of molecular vibration. The heat-units involved in raising the temperature = S. (2) It causes the body to expand against its own internal resistances; that is, it increases the range of molecular vibration. The heat so expended in doing internal work is written ρ (rho). And (3) it does external work, E, by overcoming external resistance to expansion.

$$\text{Then } Q = S + \rho + E$$

In the case of the generation of steam from water, the internal work ρ is large and the external work E is small. In the case of a perfect gas, the internal work is nothing.

Unit of Heat.—The British thermal unit (B.T.U.) is the heat required to raise 1 lb. of pure water one degree Fahrenheit, measured at a standard temperature, usually given as 39° Fahr., but more recently as 62° Fahr.

$$1 \text{ B.T.U.} = 0{\cdot}252 \text{ calorie}$$
$$1 \text{ French calorie} = 3{\cdot}968 \text{ B.T.U.}$$

Specific Heat.—When equal weights of different substances are raised

through an equal range of temperature, the quantities of heat involved are not the same in each case, but vary in accordance with the thermal capacity of the substances. Thus, if an iron vessel weighing 62·5 lbs. contain a cubic foot of water also weighing 62·5 lbs., then, though both iron and water are at the same temperature, and are equal in weight, they do not contain the same quantity of heat. As a matter of fact, the water contains about eight times the heat contained by the iron.

The relative thermal capacity, or the "specific heat," of substances is defined as the amount of heat necessary to raise unit weight of the substance one degree measured at the standard temperature. A more correct term than "specific heat" would be "coefficient of thermal capacity."

TABLE OF SPECIFIC HEATS.

			Constant p.		Constant v.
Water	1·000	Air	0·237	...	0·169
Glass	0·194	Oxygen	0·217	..	0·155
Cast iron	0·130	Hydrogen ...	3·410	...	2·412
Wrought iron	0·114	Nitrogen	0·244	...	0·173
Steel (hard)	0·117	Superheated steam	0·480	...	0·346
Copper	0·100	Carbonic acid ...	0·217	...	0·153
Mercury	0·033				

The specific heat of gases increases as the temperature increases.

Temperature.—Temperature is that quality of bodies which determines the intensity of the heat-energy contained by them. If two bodies of different temperature be placed near each other, heat tends to pass from the hotter to the colder till they both reach the same temperature.

Temperature difference is that which determines the transfer of heat from body to body, and the greater the difference of temperature the more rapidly the heat flows.

Difference of temperature is what renders heat-energy available for the performance of mechanical work, and the greater the difference or range of temperature the greater the possible efficiency of the heat. The heat contained by a body at the ordinary temperature of the surrounding bodies is not available for the performance of mechanical work.

The potential energy of high temperature may be compared to the potential energy due to a head of water. Thus, water falling from a height h and acting on a turbine, loses potential energy, which is converted into mechanical work at the turbine. The water loses potential energy, but not weight, for the same weight of water passes away as entered the turbine. So also, in the case of a steam-engine, the steam supplied to the engine loses heat-energy, but not weight. The same weight of steam passes away as entered the engine, but the heat-energy which leaves the engine is less than that which entered it by the amount which has disappeared by transmutation of heat into work.

Heat supplied = useful work + heat rejected

First Law of Thermodynamics.—The following statement is known as the *First Law of Thermodynamics:* "Heat and mechanical energy

are mutually convertible, and heat requires for its production, and produces by its disappearance, a definite number of units of work for each thermal unit."

The value of the mechanical equivalent of the thermal unit as determined by Joule was 772 foot-lbs., sometimes called Joule's equivalent, and written J.

Recent investigations, by Rowland and many others, as to the exact value of J have led to the conclusion that 778 is a more nearly correct value for the mechanical equivalent, and this value will be used throughout.

Thus 1 B.T.U. = 778 foot-lbs. = J

Second Law of Thermodynamics.—"Heat cannot pass from a cold body to a hot one by a purely self-acting process" (Clausius). That is to say, heat flows from hot to cold, but not in the reverse direction, and it is impossible, having once permitted a fall of temperature, as from the boiler furnace to the water in the boiler, or from the boiler to the condenser, to render the heat available for work by an attempt to return the heat by a self-acting process in the opposite direction.

It follows from this law that no heat-engine can convert the whole of the heat supplied to it into work, but that, as soon as the temperature of the added heat has fallen to that of the surrounding atmosphere, the heat remaining is no longer available for doing useful work. Also that if T_1 be the highest absolute temperature available, and T_2 the lowest absolute temperature available, it is impossible to obtain a greater efficiency than is represented by the fraction $\frac{T_1 - T_2}{T_1}$, whatever the nature of the working fluid. The truth of these statements will be illustrated later.

Effect of Heat upon Gases.—In order to understand more clearly the principles involved in the transformation of heat into work by steam, it will be helpful to consider first the simpler case of the action of heat upon air, which is subject approximately to very simple laws, and which laws, it is assumed, would be absolutely obeyed by a perfect gas.

Boyle's Law.—The product of the pressure P and the volume V of a perfect gas is a constant quantity when the temperature remains constant.

PV = constant (at const. temp.) where P = pressure per square foot, and V = volume in cubic feet.

The constants for various gases have been determined with great accuracy by Regnault.

The value of P_0V_0 may be calculated thus: if the volume V_0 of 1 lb. of air at 32° Fahr. and at atmospheric pressure (760 mm.) be 12 387 cub. ft. per pound—

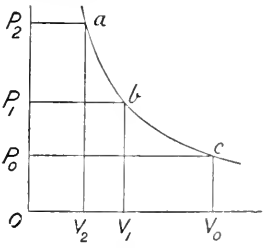

FIG. 1.

P_0V_0 = constant

$14{\cdot}7 \times 144 \times 12\,387 = 26{,}220$ foot-lbs.

If a number of rectangles of equal areas P_0V_0, P_1V_1, P_2V_2, be drawn, then the line joining the points *a*, *b*, *c* is an isothermal line, or line of constant temperature. Here P varies inversely as V, thus—

$$\begin{aligned} PV &= \text{constant} \\ 2P \times \tfrac{1}{2}V &= \quad ,, \\ 3P \times \tfrac{1}{3}V &= \quad ,, \qquad \text{etc.} \end{aligned}$$

Law of Charles.—Under constant pressure, equal volumes of different gases expand equally for the same increment of temperature, and the volume changes proportionally to the absolute temperature.

The product P_0V_0 being given for a gas at T_0, or 32° Fahr., then the value of the constant for any new PV due to change of temperature, being proportional to the absolute temperature, may be found thus:

$$P_1V_1 = P_0V_0\frac{T_1}{T_0}$$

But $P_0V_0 = 26{,}220$, and $T_0 = 32 + 461 = 493$

$$\therefore P_1V_1 = 26{,}220\,\frac{T_1}{T_0} = \frac{26220}{493}\,T_1 = 53{\cdot}2T_1 \text{ nearly}$$

This equation for a perfect gas is written $PV = RT$, where R is a constant depending on the density of the gas. For air the constant $R = 53{\cdot}2$.

Absolute Temperature.—It is found by experiment that when air is heated or cooled under constant pressure, its volume increases or decreases in such a way that if the volume of the gas at freezing-point of water be 1 cub. ft., then its volume, when heated to the boiling-point of water, will have expanded to 1·3654 cub. ft.

Or, inversely, if the volume remain constant, and the pressure exerted by the gas at freezing-point = 1 atmosphere, then the pressure at boiling-point of water = 1·3654 atmospheres.

These results may be set out in the form of a diagram (Fig. 2). Thus, draw a vertical line to represent temperatures to any scale, and mark on it points representing the freezing-point and boiling-point of water—marked 32° and 212° respectively. From 32° set out, at right angles to the line of temperature, a line of pressure *ab* = 1 atmosphere to any scale, and at 212° a line *cd* = 1·3654 atmospheres to the same scale. Join the extremities *db* of these lines, and continue the line to intersect the line of temperatures.

It is assumed by physicists that, since the pressures vary regularly per degree of change of temperature between certain limits within the range of experiment, they vary also at the same rate beyond that range, and, therefore, that the point of intersection of the straight line *db* produced gives the point at which the pressure is reduced to zero.

So long as the gas exerts any pressure, it is presumed to exert that pressure by virtue of the heat-energy contained in it; the point, therefore, of zero pressure is reckoned as the point of zero temperature on the absolute scale. Then—

$$oa + 180 : oa :: 1{\cdot}3654 : 1$$
$$\text{or } oa = 492{\cdot}6$$

that is, the zero of absolute temperature is 492·6 below the freezing-point of water, or 492·6 − 32 = 460·6 below zero Fahrenheit. Calling this 461, and writing T for temperature absolute, and t for temperature by ordinary scale, then—

$$T = 461 + t \text{ Fahrenheit}$$
$$\text{or, } T = 273 + t \text{ Centigrade}$$

Also, if P_1 and V_1 be the pressure and volume of a gas at absolute temperature T_1, then at constant volume and change of absolute temperature to T_2 its pressure $= P_1 \times \frac{T_2}{T_1}$; or its volume at constant pressure at temperature $T_2 = V_1 \times \frac{T_2}{T_1}$.

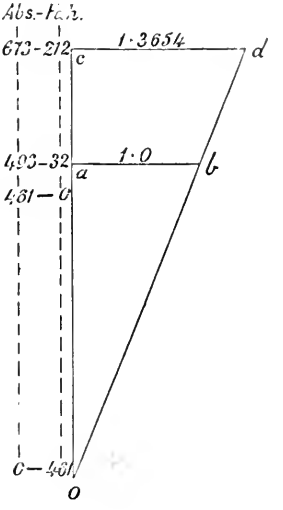

Fig. 2.

Internal or Intrinsic Energy (Joule's Law).—When a gas expands without doing external work, its temperature remains unchanged.

This law was arrived at by Joule in the following way :—

Two copper vessels, A and B, were connected by a tube as shown. One vessel was exhausted by an air-pump so as to produce as nearly as possible a perfect vacuum, and the other was filled with compressed air, at a pressure of 22 atmospheres. The vessels were then immersed in water.

When the stopcock was turned, the compressed air in A rushed into the empty vessel B. The temperature of the water surrounding the vessels was taken, before and after, with a very delicate thermometer, but no appreciable change was noted. When the vessels were immersed in *separate* vessels of water, it was found that when the stopcock was opened and the gas rushed from A, the water surrounding it fell in temperature, while the water surrounding B at the same time increased in temperature and by the same amount. The setting the mass of air in motion absorbed heat from the one vessel, which was restored again in the other vessel when the motion was destroyed. The net result was that there was no change in the temperature of the gas. The temperature of a gas is a measure of its internal or intrinsic energy, and in the above experiment, since there was no loss of temperature there was no loss of internal energy.

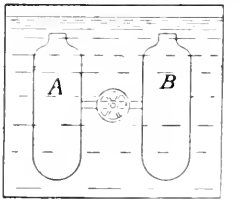

Fig. 3.

From this may be deduced also—

1. That the heat or intrinsic energy of a gas may be converted into the kinetic energy of molecules in motion, with corresponding loss of temperature, as when the gas cooled on rushing from A.

2. That the kinetic energy in the moving molecules of a gas will reappear as heat if the moving mass is brought to rest, as when the temperature increased in the vessel B.

Specific Heat of Gases (Regnault's Law).—The specific heat is the amount of heat in thermal units required to raise unit weight of the gas through 1° Fahr. The specific heat of a substance varies according to the conditions under which the substance is heated. Thus, if heat be applied to 1 lb. of gas in a closed vessel, the gas is said to be heated at *constant volume*, and the heat required to raise its temperature one degree is written C_v, which stands for specific heat of gas at constant volume in thermal units; $C_v \times 778 = K_v$, or the specific heat at constant volume expressed in foot-pounds.

When the same weight of gas is heated in a cylinder having a movable piston under a constant external pressure, if the temperature be raised one degree as before, the volume increases, and therefore *work* is done in pushing the piston out against the external pressure, as, for example, that of the atmosphere.

This is heating under *constant pressure*. The heat-units required to raise the temperature one degree under constant pressure is written C_p, and it is greater than C_v, owing to the extra heat required to do the work of moving the piston against external resistance, in addition to raising the temperature of the gas; and $C_p \times 778 = K_p$ = specific heat at constant pressure in foot-pounds. By the measurements of Regnault, the value of C_p for air = 0·1691 thermal unit = 131·6 foot-lbs. = K_p. The value of C_p for air = 0·2375 thermal unit = 184·8 foot-lbs. = K_p.

The effects of heating a gas under constant volume or constant pressure may be represented by diagrams as follows:—

Take a point *a* between the axes of pressure and volume, so that OP is its pressure and OV its volume for 1 lb. of gas. Apply heat to

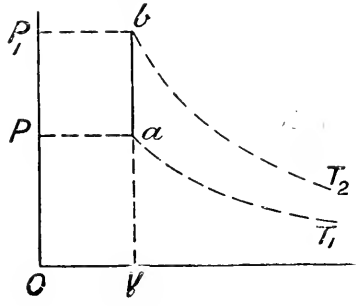

FIG. 4.

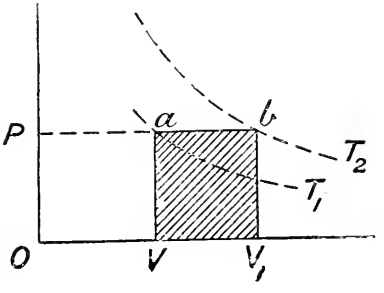

FIG. 5.

it when the piston is prevented from moving; then the pressure will rise, as shown by the vertical line *ab* (Fig. 4), and its temperature

will rise, as shown by the intersection of the line *ab* with isothermals of higher temperature.

Here the whole of the heat-energy applied has been absorbed in raising the temperature of the 1 lb. of gas. No external work has been done, work being measured by the product $P(V - V_1)$, and here $(V - V_1) = 0$.

The heat absorbed $= K_v(T_2 - T_1)$ foot-lbs. per pound, and this represents the increase of internal energy per pound.

If now the heat be applied to the gas enclosed in a cylinder under a movable piston, the external pressure being constant, the heat absorbed will not only raise the temperature of the gas from T_1 to T_2 as before, but will do work in moving the piston from V to V_1 against external resistance P (Fig. 5).

Then the line *ab* will represent the line of constant pressure, and the cross-lined area = work done $= P(OV_1 - OV)$. The heat absorbed $= K_v(T_2 - T_1) + P(OV_1 - OV)$ foot-lbs. per pound.

The total heat expended per pound under these conditions is equal to the number of degrees rise of temperature multiplied by the specific heat at constant pressure $= K_p(T_2 - T_1)$. And (the total heat expended) − (heat expended in external work) = heat expended in internal work; or since $P(OV_1 - OV) = R(T_2 - T_1)$—

$$K_p(T_2 - T_1) - R(T_2 - T_1) = (K_p - R)(T_2 - T_1)$$

But heat expended in internal work per pound and per degree rise of temperature is equal to the specific heat at constant volume—

$$\therefore (K_p - R)(T_2 - T_1) = K_v(T_2 - T_1)$$
$$(K_p - R) = K_v$$
$$R = K_p - K_v$$

that is, R = the difference between the two specific heats expressed in foot-pounds.

The ratio of the specific heat at constant pressure K_p to the specific heat at constant volume K_v is much used in thermodynamic problems, and is expressed by the Greek letter *gamma*, thus—

$$\frac{K_p}{K_v} = \gamma$$

It has been shown that—

$$K_p - K_v = R, \text{ and } K_p \div K_v = \gamma$$
$$\therefore K_v(\gamma - 1) = R$$
$$K_v = \frac{R}{\gamma - 1}$$
$$\gamma = \frac{C_p}{C_v} = \frac{0{\cdot}238}{0{\cdot}169} = 1{\cdot}408$$

Work done during Expansion.—When a gas expands in a cylinder under a movable piston, if the piston were moved by some external force, then the volume and pressure of the enclosed gas would change, but the temperature would remain constant (providing there were

no losses by radiation, etc.).[1] Therefore the curve indicating the varying condition of the gas as to pressure and volume would be an isothermal curve. If, however, the piston were moved at the expense of the heat-energy stored in the enclosed gas, or, in other words, at the expense of its intrinsic energy, then external work would be done by it and heat-energy expended; hence the pressure of the gas would fall below the isothermal, and if no other heat influences have been introduced, such as loss of heat by conduction through cylinder walls, or gain of heat from some external source or internal chemical action, then the curve described would be what is known as the *adiabatic* curve (*adiabatic* meaning literally *no passage* of heat to or from the expanding gas).

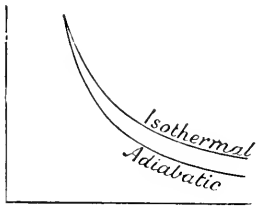

FIG. 6.

These two curves—the isothermal and the adiabatic—are of great importance in the theory of heat-engines, but they both represent ideal conditions which are only approximately realized in practice.

If, during the expansion of a given weight of gas, heat is added so as to keep the temperature constant, then the intrinsic energy of the gas is also constant (see Joule's Law), and the heat expended in doing external work during expansion is exactly balanced by the heat supplied to retain the gas at constant temperature.

The work done during isothermal expansion is given by the area *abdc* enclosed between the hyperbolic curve, the two vertical ordinates, and the zero line of pressure.

This area may be supposed to be made up of a number of indefinitely narrow strips, the area of each being equal to $p \times dv$, where p = pressure, and dv the indefinitely small width of the strip.

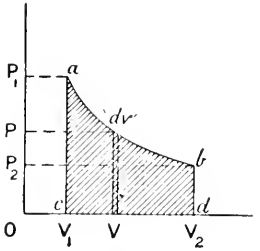

FIG. 7

Then, since $PV = P_1V_1 =$ constant, pressure at $V = P = \frac{P_1V_1}{V}$, where V = volume OV (Fig. 7), and area of strip $dv = \frac{P_1V_1}{V}dV$. Integrating between the limits V_1 and V_2

$$\text{area} = \int_{V_1}^{V_2} \frac{P_1V_1}{V}\,dV$$

$$= P_1V_1 \int_{V_1}^{V_2} \frac{dV}{V}$$

$$= P_1V_1 \log_e \frac{V_2}{V_1} = P_1V_1 \log_e r$$

where r = ratio of expansion; or, since $P_1V_1 = PV = RT$, $P_1V_1 \log_e r = RT \log_e r$.

The expression $RT \log_e r$ measures not only the work done during isothermal expansion, and therefore the heat expended, but also the

[1] This would not be true for *steam*, as the temperature of saturated steam varies with the pressure under all circumstances.

heat supplied to balance the loss and to retain the constant temperature, or constant intrinsic energy of the gas.

Work done during Adiabatic Expansion.—During adiabatic expansion the work done is less than that done during isothermal expansion, owing to the fact that during adiabatic expansion the work is done at the expense of its own intrinsic energy alone, and the amount of heat in the gas as the expansion proceeds becomes less and less. In any case the change of internal energy and the amount of work done per pound of gas $= K_v(T_1 - T_2)$.

The adiabatic expansion curve for a gas is a particular case of the general formula $PV^n = \text{constant}$, and is written $PV^\gamma = \text{constant}$, where $\gamma =$ the ratio of the specific heats $= \frac{K_p}{K_v} = 1{\cdot}4$ for air.

The area enclosed by a curve of this form is obtained thus :

$$\text{area} = \int_{V_1}^{V_2} P dV$$

$$\text{but } PV^n = P_1V_1^n$$

$$\therefore P = \frac{P_1V_1^n}{V^n}$$

$$\text{area} = \int_{V_1}^{V_2} \frac{P_1V_1^n}{V^n} dV$$

$$= P_1V_1^n \int_{V_1}^{V_2} \frac{dV}{V^n}$$

$$= P_1V_1^n \int_{V_1}^{V_2} V^{-n} dV$$

$$= P_1V_1^n \left[\frac{V^{-n+1}}{-n+1} \right]_{V_1}^{V_2}$$

$$= P_1V_1^n \left(\frac{V_2^{1-n} - V_1^{1-n}}{1-n} \right)$$

$$= \frac{P_1V_1^n(V_1^{1-n} - V_2^{1-n})}{n-1}$$

$$= \frac{P_1V_1^nV_1^{1-n} - P_1V_1^nV_2^{1-n}}{n-1}$$

$$= \frac{P_1V_1 - P_2V_2}{n-1} \quad \ldots\ldots\ldots\ldots \quad (1)$$

This may also be written—

$$\text{area} = \frac{P_1V_1^n(V_1^{1-n} - V_2^{1-n})}{n-1}$$

$$= \frac{P_1V_1^nV_1^{1-n}\left(\frac{V_1^{1-n} - V_2^{1-n}}{V_1^{1-n}}\right)}{n-1}$$

$$= \frac{P_1V_1\left(1 - \frac{V_2^{1-n}}{V_1^{1-n}}\right)}{n-1}$$

$$= \frac{P_1V_1\left\{1 - \left(\frac{V_1}{V_2}\right)^{n-1}\right\}}{n-1} \quad \ldots\ldots\ldots \quad (2)$$

Then, dealing with a cubic foot of gas, since $144p$ = pressure per square foot = P, work done during expansion from V_1 to V_2

$$= \frac{144 \times p_1 r_1 \left\{1 - \left(\frac{r_1}{r_2}\right)^{n-1}\right\}}{n-1}$$

Also $P_1 V_1^n = P_2 V_2^n$ = constant; $\left(\frac{V_1}{V_2}\right)^n = \frac{P_2}{P_1}$;

$$\therefore \frac{V_1}{V_2} = \left(\frac{P_2}{P_1}\right)^{\frac{1}{n}}; \text{ and } \left(\frac{V_1}{V_2}\right)^{n-1} = \left(\frac{P_2}{P_1}\right)^{\frac{n-1}{n}}$$

Therefore work done during expansion between pressures P_1 and P_2

$$= \frac{144 \times p_1 r_1 \left\{1 - \left(\frac{P_2}{P_1}\right)^{\frac{n-1}{n}}\right\}}{n-1} \quad \ldots\ldots (3)$$

The above equations (1), (2), and (3) give the work done per cubic foot of gas during expansion only, and with zero back pressure.

Therefore the total work done during admission and expansion against back pressure P_2

$$= \frac{1}{n-1}(P_1 V_1 - P_2 V_2) + P_1 V_1 - P_2 V_2$$

$$= \frac{n}{n-1}(P_1 V_1 - P_2 V_2) = \frac{n}{n-1} P_1 V_1 \left\{1 - \left(\frac{P_2}{P_1}\right)^{\frac{n-1}{n}}\right\}$$

Relation between Volume, Pressure, and Temperature for a Perfect Gas.

$$P_1 V_1 = RT_1; \; P_2 V_2 = RT_2 \qquad \therefore \frac{P_2 V_2}{P_1 V_1} = \frac{T_2}{T_1}$$

For adiabatic expansion, also $P_1 V_1^{\gamma} = P_2 V_2^{\gamma}$

therefore multiplying, $\frac{T_2}{T_1} = \frac{P_1 V_1^{\gamma} P_2 V_2}{P_2 V_2^{\gamma} P_1 V_1} = \left(\frac{V_1}{V_2}\right)^{\gamma-1}$

also $\frac{T_2}{T_1} = \left(\frac{P_2}{P_1}\right)^{\frac{\gamma-1}{\gamma}}$

$$\therefore T_1 : T_2 :: V_2^{\gamma-1} : V_1^{\gamma-1}$$

$$\text{and } T_1 : T_2 :: P_1^{\frac{\gamma-1}{\gamma}} : P_2^{\frac{\gamma-1}{\gamma}}$$

$$V_2 : V_1 :: P_1^{\frac{1}{\gamma}} : P_2^{\frac{1}{\gamma}}$$

$$V_2^{\gamma} : V_1^{\gamma} :: P_1 : P_2$$

EXAMPLE.—Air is drawn into an air-compressor at 60° Fahr., or 521° absolute, and at atmospheric pressure: find the temperature when the pressure is raised to four atmospheres without loss of heat by cooling.

Then from equation—

$$T_2 = T_1\left(\frac{P_2}{P_1}\right)^{\gamma\frac{1}{\gamma}}$$
$$= 521(4)^{\frac{1\cdot4-1}{1\cdot4}}$$
$$\log T_2 = \log 521 + \tfrac{0\cdot4}{1\cdot4}\log 4$$
$$= 2\cdot7168 + (0\cdot29 \times 0\cdot602)$$
$$= 2\cdot8914$$
$$T_2 = 779^\circ \text{ absolute, or } 318^\circ \text{ Fahr.}$$

To find the value of n in the equation PV^n = constant.

1. Let *ab* be a portion of the curve of the form PV^n constant. Take any point *p* in the curve, and draw a tangent to the curve from *p*, intersecting OY and OX in *e* and *d*; then $\frac{ce}{eo} = \frac{of}{fd} = n$, which may be obtained by measurement. This method may be applied to indicator diagrams when *ep* = total volume of gas (including clearance), and OX = zero line of pressure (absolute).

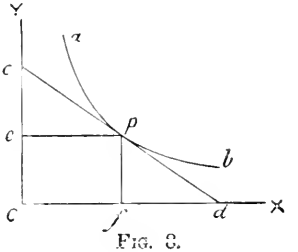

FIG. 8.

2. The value of *n* may also be obtained by taking any two points on the curve; then using the equation—

$$\text{area} = \frac{P_1V_1 - P_2V_2}{n-1}$$

(except when $n = 1$, when the formula fails).

3. Since $PV^n = P_1V_1^n$ = constant—

$$\log P + n \log V = \log P_1 + n \log V_1$$
$$\therefore\ n = \frac{\log P_1 - \log P}{\log V - \log V_1}$$

Heat-Energy represented by Areas.[1]—When heat is applied to a perfect gas—that is, a gas in which none of the heat added is absorbed in doing work to overcome internal resistance, but all the heat goes either to increase the temperature or to do external work—then the quantities of heat involved may be represented by areas as follows:

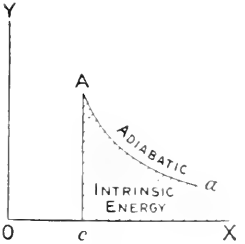

FIG. 9.

1. Let A represent the condition as to pressure and volume of 1 lb. of gas at a given temperature; and let the gas expand, doing work by virtue of the heat-energy contained in the gas, but without loss or gain of heat externally. Then, when the gas has expanded indefinitely until

[1] See Papers by Dr. Oliver Lodge, *Engineer*, January, 1894.

the whole of the intrinsic energy has been expended by conversion into work, the temperature will have reached absolute zero. The work done, and therefore also the intrinsic energy of the gas at the beginning—in condition represented by point A—will be represented by the area enclosed by the lines Ac, cX, and the adiabatic curve Aa prolonged to meet OX (Fig. 9).

If expansion continue to zero temperature and pressure, then—

$$\text{area} = \frac{P_1V_1 - P_2V_2}{\gamma - 1}$$

But $P_2 = 0$,

$$\therefore \text{ area} = \frac{P_1V_1}{\gamma - 1} = \frac{RT_1}{\gamma - 1} = K_v T_1$$

either of which expressions represents the intrinsic energy of the gas in state A.[1]

2. If heat be added to the gas in state A at constant volume till its temperature rises to B, then, if adiabatics be drawn through A and B (Fig. 10), area $XcAa$ represents the intrinsic heat-energy in the gas in state A, $XcBb$ the intrinsic energy in state B, and the area $aABb$ represents the additional heat required to change the state of the gas from A to B.

Since the internal energy in a given weight of gas depends on the temperature, then, if temperature at A $= T_1$ and that at B $= T_2$, considering unit weight of gas—

$$\text{area } aABb = K_v(T_2 - T_1)$$
$$= \frac{R}{\gamma - 1}(T_2 - T_1)$$

3. For any change of state from A to B accompanied by addition of heat, if adiabatics be drawn through A and B, area $aABb$ gives the heat received by the gas during the change from state A to state B.

But during expansion from A to B work has been done represented by area $cABd$ (Fig. 11), and therefore the total heat applied = in-

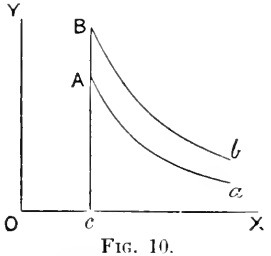

Fig. 10.

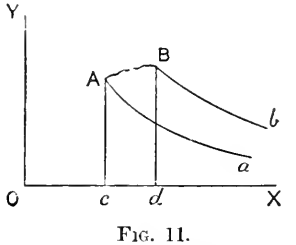

Fig. 11.

trinsic energy in B + work done in passing from state A to state B - intrinsic energy in A;

that is, $XdBb + cABd - XcAa = aABb$ = heat supplied

If the temperature of the gas at B is greater than that at A, then

[1] To draw an adiabatic curve, see Appendix.

the intrinsic energy at B is greater than at A, and the heat added to the gas at A is more than that required merely to do the work $cABd$.

4. Let now the path A to B be situated as in Fig. 12, where B falls below the adiabatic through A. Here no heat has been received

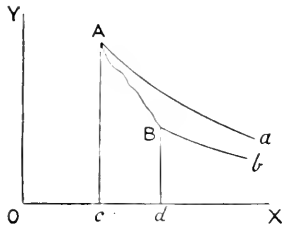

FIG. 12.

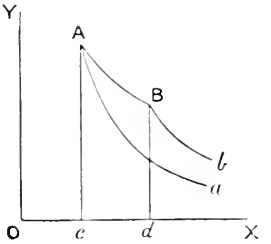

FIG. 13.

from external sources; on the contrary, loss of heat has taken place represented by area $bBAa$. And intrinsic energy of gas in state A = work done during expansion A to B + intrinsic energy remaining in gas in state B + loss of heat during expansion; or—

$$\text{area } XcAa = cABd + XdBb + bBAa$$

5. An important case is the one in which the heat added to a perfect gas during expansion is the exact equivalent of the work done, and therefore the temperature at the end of the operation remains the same as at the beginning. This is the case of isothermal expansion.

Here, since AB (Fig. 13) is an isothermal, or line of constant temperature, the intrinsic energy of the gas is constant at any point in this line independently of pressure or volume. Intrinsic energy in A = $XcAa$. Heat added during expansion A to B = $aABb$. But energy at A + heat added = energy remaining at B + work done; or

$$XcAa + aABb = XdBb + cABd$$
$$\text{But } XcAa = XdBb$$
$$\therefore aABb = cABd$$

that is, the heat added to a perfect gas during isothermal expansion is the exact equivalent of the work done.

The relation of the four areas marked W, X, Y, Z (Fig. 14), to the quantities of heat involved in the change from A to B when AB is an isothermal line is as follows:—

W + X = work done
X + Y = heat received equivalent to work done
W + Z = intrinsic energy in gas at A
Y + Z = intrinsic energy in gas at B
W = work done at expense of intrinsic energy originally present at A
X = additional work done by heat received during operation AB

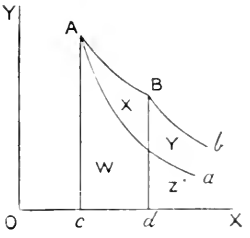

FIG. 14.

Z = residual energy remaining of original energy at A
Y = additional heat-energy to maintain constant intrinsic energy of gas during expansion along the isothermal line AB

Work done during Compression.—If a quantity of gas, in state A as to pressure and volume, be compressed in a cylinder under a movable piston, then, if the compression take place slowly, the heat due to the work done upon the gas, instead of increasing its temperature, may be supposed to be dissipated through the sides of the containing vessel. In this case the temperature would remain constant, and the pressure would increase in accordance with Boyle's Law, and the curve of compression would be given by the isothermal curve AB. If, however, the compression of the gas is supposed to take place quickly, then the heat due to the work done upon the gas will increase the temperature of the gas, and the pressure will also rise, in consequence of the increased temperature, above that during isothermal compression, and the curve of compression will be given by a curve AC above AB.

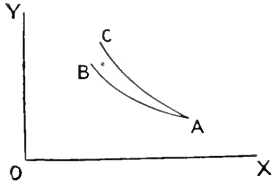

FIG. 15.

The work done upon the gas during isothermal compression is the same as the work done by the gas during isothermal expansion, and is given by the expression $P_1V_1 \log_e \frac{V_1}{V_2}$; or $= RT_1 \log_e r$ where V_1 is the original and V_2 the final volumes, and $V_1 \div V_2 = r$.

Similarly, the work done upon the gas during adiabatic compression is the same as the work done by it during adiabatic expansion—

$$= \frac{P_1V_1 - P_2V_2}{\gamma - 1}$$

These principles may be illustrated by taking the work done in an air-compressor (Fig. 16) on 1 lb. of air. During the suction stroke from O to M, the volume V_1 at pressure P_1 is drawn into the cylinder. On the return stroke the air is confined, and as the volume decreases the pressure increases finally to P_2, at which pressure the air is forced into the mains. If, during the operation of compressing the air, the heat due to compression is all removed by some method of cooling, the temperature of the air will remain constant, and the line of pressures will follow the isothermal curve NE. If, however, the air is not cooled during compression, but all the heat due to compression be retained, then the line of pressures will follow the adiabatic curve NF. In practice the actual curve takes some position, NG, between the isothermal and adiabatic lines.

During the suction stroke BN the work done $= p_1v_1$.

During compression NF up to pressure $p_2 = p_3$, the work done

$$= \frac{p_3v_3 - p_1v_1}{n - 1}$$

During the delivery of the air FA against constant pressure p_3 the work done $= p_3 v_3$. The net work (U) of compression from p_1 to p_3 and delivery at p_3 per lb. of air = area BAFN.

$$U = \frac{p_3 v_3 - p_1 v_1}{n-1} + p_3 v_3 - p_1 v_1$$

$$= \frac{n}{n-1}(p_3 v_3 - p_1 v_1)$$

$$= \frac{n}{n-1} p_1 v_1 \left(\frac{p_3 v_3}{p_1 v_1} - 1 \right)$$

But $\frac{v_3}{v_1} = \left(\frac{p_1}{p_3} \right)^{\frac{1}{n}}$

$$\therefore U = \frac{n}{n-1} RT_1 \left\{ \left(\frac{p_3}{p_1} \right)^{\frac{n-1}{n}} - 1 \right\}$$

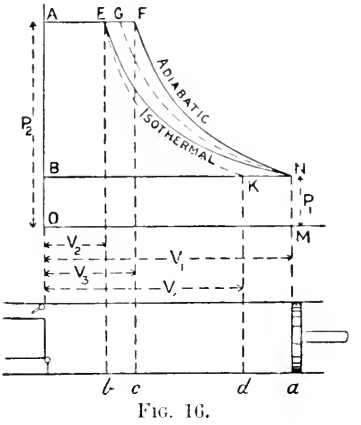

Fig. 16.

The work done upon the gas by compression from p_1 to p_3 is converted into heat and increases the temperature of the gas, thus—

$$T_3 = \left(\frac{p_3}{p_1} \right)^{\frac{n-1}{n}} T_1$$

The mean effective pressure during compression and delivery = U ÷ v_1—

$$= \frac{n}{n-1} p_1 \left\{ \left(\frac{p_3}{p_1} \right)^{\frac{n-1}{n}} - 1 \right\}$$

When the compression is adiabatic, $n = \gamma = 1{\cdot}4$.

Carnot's Cycle.—A cycle is defined as a series of operations through which a substance is passed, the substance being brought back finally to the same state in all respects as that from which it started. The area enclosed by the cycle is a measure of the net or useful work done.

The cycle of operations known as Carnot's cycle for a perfect or ideal heat-engine consists of four stages, illustrated as follows :—

Let a cylinder contain unit weight of gas enclosed under a movable piston, and let there be an indefinite supply of heat at constant temperature, T_1; also a lower limit of temperature, T_2. Then, assuming no losses due to radiation, conduction, and friction—

1. Let the temperature of the gas in the cylinder to start with be the same as that of the source of heat, namely T_1, and let the cylinder be in contact with the source of heat. Then, if the gas at state point A (Fig. 17) in the cylinder expands, doing work on the piston, and at the same time a supply of heat from the source passes into the gas, maintaining the temperature constant at T_1, the change of pressure and volume will be represented by the isothermal line AB. During this

process the work done = aABb. At the same time a quantity of heat, Q_1, has been given to the expanding gas—

$$Q_1 = a\text{AB}b = \text{XABY}$$

2. Let the supply of heat be cut off at B, and let the gas continue to expand without any further communication of heat. Then the pressure will fall more rapidly, and the temperature will no longer be maintained at T_1, owing to the loss of heat in the performance of external work, which has been done at the expense of the intrinsic energy of the gas; and let the temperature fall to the lowest temperature, T_2, during which the expansion curve BC is described. The work done during BC = bBCc. This completes the forward stroke.

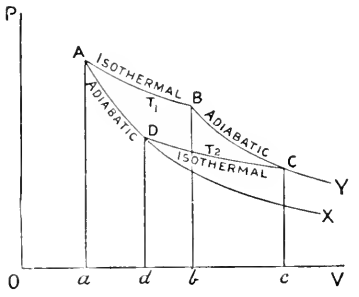

FIG. 17.

3. By the aid of a flywheel or other means, let the return stroke now be made; but let the cylinder be now placed in contact with an indefinitely large cooling arrangement, represented by the lower limit of temperature, T_2, the temperature of the gas at C being also T_2. There is at first no transfer of heat. But, as the gas is compressed behind the piston while it returns, the immediate effect is to increase the temperature of the gas; but, being in contact with the cooler at temperature T_2, the temperature remains at T_2 during the time the compression is going on. Let the compression continue till the piston reaches point D, when communication with the cooler is closed.

The point is so chosen that the adiabatic through D passes through A.

During this third operation the piston does work on the substance, the amount of which is negative and is equal to the area cCDd. At the same time a quantity of heat, $-Q_2$, has been rejected to the cooler—

$$Q_2 = c\text{CD}d = \text{XDCY}$$

4. Continuing the compression, no heat can now escape, and the pressure and temperature rapidly rise; the compression line DA is described, and the substance is restored to A at T_1, where its condition is now in every respect the same as at the beginning of the series of operations. The work done during the compression DA is negative, and is = aADd.

The net work (W) done is the algebraic sum of the work done during each of the separate operations; thus, using the symbol W_1 to represent work done during the first operation, namely, expansion AB—

$$W = W_1 + W_2 - W_3 - W_4$$
$$= \text{area ABCD}$$

These quantities may be stated in detail thus, using p_a for pressure at a, and v_a for volume at a; then—

(1) $$W_1 = p_a v_a \log_e \frac{V_b}{V_a}$$

since AB is an isothermal line. This also represents heat taken in by gas during expansion AB = Q_1 = $aABb$ = XABY.

(2) No heat taken in or rejected. Work done by gas during adiabatic expansion BC = W_2—

$$W_2 = \frac{p_b v_b}{\gamma - 1}\left\{1 - \left(\frac{V_b}{V_c}\right)^{\gamma - 1}\right\}$$

loss of internal energy = $K_e(T_1 - T_2)$

(3) Heat rejected during operation CD = W_3—

$$W_3 = p_c v_c \log_e \frac{V_c}{V_d}$$
$$= Q_2 = cCDd = XDCY$$

(4) No heat taken in or rejected. Work done on gas during adiabatic compression DA = W_4—

$$W_4 = \frac{p_a v_a}{\gamma - 1}\left\{1 - \left(\frac{V_a}{V_d}\right)^{\gamma - 1}\right\}$$

gain of internal energy = $K_e(T_1 - T_2)$

In operations (2) and (4) the loss and gain of heat are equal and balance each other; also comparing the work done in the two cases W_2 and W_4, it will be seen that the equations are equal, for $p_a v_a = p_b v_b$, since a and b are on the same hyperbolic curve. It has also been shown (p. 14) that, since AD and BC are adiabatic curves—

$$\left(\frac{V_a}{V_d}\right)^{\gamma - 1} = \frac{T_2}{T_1};\quad \left(\frac{V_b}{V_c}\right)^{\gamma - 1} = \frac{T_2}{T_1};\quad \therefore \frac{V_a}{V_d} = \frac{V_b}{V_c};$$

Comparing stages (1) and (3)—

we have $$\frac{V_b}{V_a} = \frac{V_c}{V_d} = r$$

therefore from (1) $$W_1 = p_a v_a \log_e \frac{V_b}{V_a} = RT_1 \log_e r$$

and from (3) $$W_3 = p_d v_d \log_e \frac{V_c}{V_d} = RT_2 \log_e r$$

Then the difference between heat absorbed in (1) and heat rejected in (3) = heat converted into work = $R(T_1 - T_2) \log_e r$.

But total heat received = $RT_1 \log_e r$

therefore efficiency = $$\frac{R(T_1 - T_2)\log_e r}{RT_1 \log_e r} = \frac{T_1 - T_2}{T_1}$$

From a study of the statement of the Carnot efficiency, it will be evident that "between given limits of temperature the efficiency of an engine is the greatest possible when the whole reception of heat takes

place at the highest limit, and the whole rejection of heat at the lowest."

The greater the range of temperature available, the nearer the fraction $\frac{T_1 - T_2}{T_1}$ approaches unity, and therefore the greater the value of the efficiency of the engine, other things being equal.

The range may be increased by increasing the value of T_1, or decreasing the value of T_2.

Suppose an engine to work between the temperatures 300° Fahr. and 60° Fahr. Then its maximum efficiency

$$= \frac{T_1 - T_2}{T_1} = \frac{761 - 521}{761} = 0{\cdot}315 = 31{\cdot}5 \text{ per cent.}$$

It will therefore be seen that the quantity of heat which is rejected at T_2 is necessarily large even under the best conditions, and that the efficiency is of necessity far removed from unity.

The value of the fraction increases as T_1 increases, and this is the direction in which improvement continues to be made from time to time in the steam-engine, and it has been carried to a still greater extent in the gas and oil engine.

The lowest practical limit, T_2, is the temperature of the surrounding atmosphere.

It may assist the student if the action of heat-engines, working between given limits of temperature, be compared with the action of the water-wheel working between two different water-levels. The water-wheel is a device for using the difference of water-level, while the heat-engine is a device for using difference of temperature, in both cases for the purpose of doing useful work.

In the case of the water-wheel, it is evidently essential to maximum efficiency that full use should be made of the difference of level ; that no part of the height is wasted before the water reaches the wheel or after it leaves it. In other words, to take full advantage of the height, the wheel should receive its water from the highest level and release it at the lowest.

We might push the analogy a step further to illustrate the principle that *reversibility* is a condition of maximum efficiency. For suppose some external mechanical power to work the water-wheel ; then, if the direction of rotation of the wheel be reversed, the wheel might be made to transfer water from the lower level to the higher level, providing that the wheel, when working normally, received water at the highest level and rejected it at the lowest ; any fall at either side of the wheel would prevent it from being reversible. This analogy is due to Carnot.

If the reversible water-wheel just described were turned in the reverse direction by a second water-wheel (made somewhat wider, so as to make it, say, 20 per cent. more powerful), then the first wheel might be made to lift the water back again from the bottom level to the top.

If, however, the water-wheel were reversed by means of a heat-engine instead of by another water-wheel, then, with the ordinary commercial engine, the heat expended will be from five to ten times as great as that actually converted into work, 80 to 90 per cent. of the heat being rejected at the exhaust of the engine.

From this we see that when work is done by gravity, or transferred as work in any way, the loss is merely that due to the friction of the machinery of transmission, and need not be more than perhaps 20 per cent.; whereas when work is done by transmutation of *heat* into work, there is always a necessary and unavoidable loss of at least 70 per cent. of the heat, when working between the limits of temperature at present used in steam-engines, and a further loss of from 10 to 20 per cent. from causes which are more or less preventible.

It appears, therefore, that work obtained by means of heat-engines is a somewhat costly commodity, and it is therefore important to strive to obtain as high a percentage as possible of the heat actually available as work.

From what has been said, it will be evident that though, by the first law of Thermodynamics, heat and work are mutually convertible, all the work which can be obtained by the conversion of the heat will not be available as useful work. Thus, when speaking of the heat value of 1 lb. of coal as 14,000 heat units, and expressing the same as units of work, we write—

$$14{,}000 \times 778 = 10{,}892{,}000 \text{ foot-lbs.}$$

But it is a mistake to suppose that this number of foot-pounds of useful work can be obtained from 1 lb. of coal, as only about 30 per cent. of it is available for the performance of useful work under the most perfect conditions within present limits of temperature.

By a consideration of the areas, Figs. 10, 11, 13, and 17, it will be seen why it is not possible in any case to convert into useful work the whole of the heat added to a working fluid. Thus, suppose 1 lb. of air at atmospheric temperature, say 60°, is heated to 500° Fahr., and the gas is expanded behind a piston, doing work until the temperature has again fallen to 60°. It might be thought that the whole of the heat in this case had been converted into useful work; but it is not so, because during the expansion of the gas—in addition to the useful work done—it has been doing work against the back pressure on the other side of the moving piston; and it would only be possible to convert the *whole* of the heat into useful work provided the gas was expanded against absolute zero of pressure and temperature behind the piston; also that the expansion of the gas itself was continued down to this limit, namely, the absolute zero of temperature and pressure. The loss due to incomplete expansion and to work done against back pressure accounts for the large loss of heat rejected at the exhaust in all heat-engines (see Temperature-entropy diagrams, Chap. III.).

By the second law of Thermodynamics, it is not possible to expand, to any useful purpose, below the temperature of the surrounding

atmosphere, and there are many practical objections to expanding as far as this, especially that of excessive dimensions of the engine. Increase of practical efficiencies must therefore be obtained in the direction of increased initial temperatures, as very little improvement can be expected at the lower end of the scale.

These statements may be summarized as follows :—

1. *Work* transmitted as *work*, as from one machine to another. The possible efficiency may reach nearly 100 per cent., depending only on the loss of friction.

2. *Heat* transmitted as *heat*, measured as heat units and independently of temperature ; as from the furnace to the water in a heating apparatus. The possible efficiency may reach perhaps 90 per cent., depending only upon the difference between the quantity of heat, Q_1, generated by the products of combustion and the quantity, Q_2, rejected. The efficiency $= (Q_1 - Q_2) \div Q_1$, where Q = quantity of heat as distinguished from temperature.

3. *Work* converted into *heat*, as in the case of the friction brake. Here the efficiency will be 100 per cent.

4. *Heat* converted into *work*. Here the efficiency always equals $(Q_1 - Q_2) \div Q_1$, where Q_1 = heat received, and Q_2 = heat rejected. But this practical efficiency, $\frac{Q_1 - Q_2}{Q_1}$, always falls short of the efficiency, $\frac{T_1 - T_2}{T_1}$, of a perfect engine.

Within the present limits of temperature used in steam-engines, the efficiency of the perfect engine cannot exceed about 30 per cent. The actual efficiency of steam-engines varies from $2\frac{1}{2}$ to 20 per cent.

CHAPTER II.

PROPERTIES OF STEAM.

The volume of 1 lb. of water at its temperature of maximum density = 0·016 cub. ft. At higher temperatures its volume per pound increases, and is obtained by multiplying 0·016 by a factor, the value of which, as determined by Hirn, is as follows :—

Temperature.	Factor.
212° Fahr.	1·0431
284° „	1·0795
356° „	1·127
392° „	1·159

Let heat be applied to 1 lb. of water at 32° Fahr., enclosed in a cylinder under a movable frictionless piston exposed to atmospheric pressure externally, and suppose the area of the piston to be 1 sq. ft. Then, neglecting the weight of the piston, the pressure on the piston = the pressure of the atmosphere = p lbs. per square inch = $p \times 144$ lbs. per square foot = P.

The effects of heat upon the water are—

1. The temperature rises, but the piston remains stationary, except for the small expansion of the water, till a certain temperature is reached depending on the pressure on the piston. This temperature is called the *boiling-point*, and it varies as the pressure on the water varies, thus :

Pressure on water.	Boiling-point.
1 lb. per square inch	102° Fahr.
5 „ „	162° „
10 „ „	194° „
14·7 (atmospheric pressure)	212° „
20 lbs. per square inch	228° „
100 „ „	328° „
350 „ „	432° „

2. As soon as the water has reached the boiling-point, though the application of heat is still continued, there is no further rise in temperature, but steam begins to form and the piston to rise against external pressure. Meantime the water gradually disappears, the weight of steam formed corresponding to the weight of water which

disappears, till the whole of the 1 lb. of water has been converted into 1 lb. of steam. The steam during formation remains at the same temperature as the water from which it is produced. The heat added all the while evaporation is taking place is termed "latent heat," so called because the continued application of heat during evaporation does not raise the temperature, and it was not clear to the early experimenters what became of this heat.

3. The water having been completely evaporated, if the heat be still further continued, the temperature, instead of remaining constant as before, will again begin to rise, now that the steam is no longer in contact with water; and the piston will also continue to rise higher; and the result will be the formation of *superheated* steam at constant pressure, but increasing volume and increasing temperature. Steam is said to be "superheated" when it is heated above the temperature of the boiling-point of the water corresponding to the pressure at which it is generated.

Saturated Steam is steam at the greatest possible density for its pressure. It is invisible, and also, of course, "dry," as, if it were not, it must contain moisture or water in suspension, and this would then not be steam only, but a mixture of steam and water, or wet steam, which is no longer invisible.

If 1 lb. of water is gradually converted into steam in a cylinder under a movable piston, the steam is saturated all the time of its formation until the last drop of water is evaporated. Beyond that point, if the heat is continued, the steam becomes superheated, increases in volume, and the vessel no longer contains steam at the greatest possible density.

Pressure and Temperature of Saturated Steam.—The temperature of saturated steam in the presence of water is the same as that of the water with which it is in contact, and there is one temperature only for steam at any given pressure. At any other pressure the temperature has some other value, but always fixed for that particular pressure. If the temperature falls, then the pressure falls, and a portion of the steam is at the same time condensed; or if the temperature increases, then the pressure also increases, and more of the water present is converted into steam.

It may here be noted that, in practice, the water in a boiler, when the circulation is bad, is not all of the same temperature throughout. The temperature of the upper portion of the water is the same as that of the steam, but the temperature of the water below the fire is not necessarily the same, and where this occurs, the effect is to produce unequal expansion in the boiler, which is the cause of many serious boiler troubles.

Our knowledge of the relation between the pressure, temperature, and volume of saturated steam is chiefly due to the experiments of Regnault. The results of these experiments were stated in the form of equations, from which the tables now in use have been calculated.

Regnault's experiments were conducted with great care and

accuracy, and the results plotted, and curves drawn on copper, from which the formulæ were then deduced.

The general relationship between pressure and temperature is set forth in the following diagram (Fig. 18), from which it will be seen that the pressure not only varies with the temperature, but that the rate of change of pressure is more rapid as the temperatures increase. Thus at 212° Fahr., and at atmospheric pressure, a rise of 1° in temperature is followed by a rise of pressure of hardly $\frac{1}{3}$ lb. per square inch, while at 400° Fahr., or 250 lbs. pressure, a rise of temperature of 1° is accompanied by an increase of pressure of 3 lbs. per square inch; and the pressure rapidly increases; thus steam at 546° Fahr. has a pressure of 1000 lbs. per square inch.

It has been proposed to use high-pressure steam in pipes of small bore to act as a means of superheating steam brought in contact with the external surface of the pipes, but it will be seen how enormously high the pressure must become before a temperature can be reached which shall be of much use for superheating.

It should also be pointed out that though the working pressures of steam will undoubtedly continue to rise in many departments of engineering, yet the efficiency of the steam is proportional to the *range of temperature* through which it works, and hence the rate of gain of efficiency will not keep pace with the rate of increase of pressure.

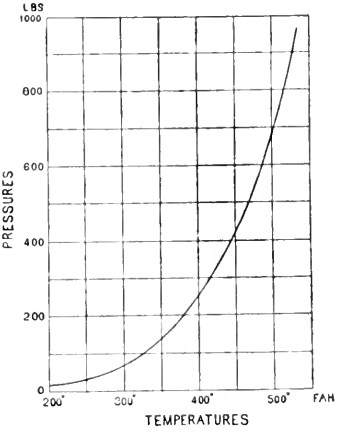

FIG. 18.

Rankine gives the following equation connecting the pressure and temperature of saturated steam:—

$$\log_{10} p = A - \frac{B}{T} - \frac{C}{T^2}$$

in which $T = t + 461{\cdot}2$ Fahr.

For pounds per square inch the values A, B, and C are, $A = 6{\cdot}1007$, $\log B = 3{\cdot}43642$, $\log C = 5{\cdot}59873$. This equation gives very accurate results. It is most convenient to obtain temperatures from the tables in practice, but the tables usually do not give values at very high pressures.

Specific Heat of Water and Steam.—For practical purposes, the specific heat of water is reckoned as unity at all ordinary temperatures. In other words, if t be the temperature of the water, then the units of heat required to raise 1 lb. of the water from 32° to $t° = t - 32$. This, however, though sufficiently accurate for practical purposes, is not strictly true.

The specific heat of steam, according to Regnault, is 0·4805 at constant pressure, and 0·346 at constant volume.

Total Heat of Steam.—The total heat of evaporation (H) is defined to be the number of units of heat required to raise a pound of water at 32° Fahr. to a given temperature, and to convert it all into steam at that temperature. The equation by which the value of H may be calculated for any temperature, $t°$, of the steam in Fahrenheit units is—

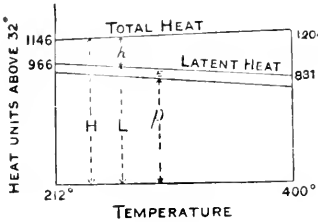

FIG. 19.

$$\text{total heat} = 1082 + 0{\cdot}305t$$

From which it will be seen that the total heat slowly increases as the temperature of evaporation increases, namely, by 0·305 thermal unit per degree of rise in temperature (see Fig. 19).

Heat to raise the temperature of the water (h) during evaporation, reckoned from 32°, is the number of thermal units per lb. to raise the water from 32° Fahr. to the temperature of evaporation t. In practice it is usual to obtain the value of h, thus:

$$h = t - 32$$

The true value of h is, however, somewhat greater than this, and is given in the Tables in the Appendix; it includes the heat used in expanding the water as well as in increasing its temperature.

If the feed water supplied to a boiler is at some temperature, t_f higher than 32°, the total heat of evaporation is then reduced by $t_f - 32$; thus, if the temperature of the water to begin with is, say, 50° Fahr., then the total number of thermal units per pound required to convert it into steam at 212° will be less than that given by the tables by 50 − 32, or = 1146·6 − (50 − 32) = 1128·6.

Latent Heat.—The latent heat of evaporation (L) is defined as the heat required to convert 1 lb. of water at a given temperature into steam at the same temperature, and under constant pressure.

$$H = L + h$$
$$\text{or } L = H - h$$

Or L may be obtained approximately by the following formula:—

$$L = 1114 - 0{\cdot}7t$$

From this equation it will be seen that the latent heat decreases as the temperature increases (see Fig. 19).

During the evaporation of 1 lb. of water, for every additional unit of heat, $\frac{1}{L}$ part of the 1 lb. of water is converted into steam, till the last drop of water is evaporated. The heat L supplied during this process of evaporation has been expended in two ways: (1) In overcoming the internal molecular resistances during the change of state from water at boiling temperature to steam. The heat so used is termed the *internal* latent heat, and is usually written

with the Greek letter ρ. (2) In doing external work by overcoming the external resistance or pressure, P, per square foot through a space equivalent to the volume occupied by the 1 lb. of steam at the given pressure, less the original volume of the 1 lb. of water. This heat is called the *external* latent heat, and is written E.

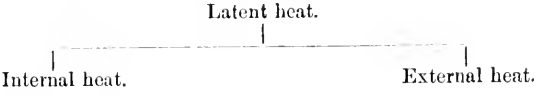

Then, during formation of steam—

$$\text{total heat H} = h + \text{L}$$
$$= h + \rho + \text{E}$$
$$\text{also E} = \frac{\text{PV}}{\text{J}} = \frac{\text{PV}}{778} \text{ heat-units}$$

PV is the work done in foot-pounds, omitting the volume occupied by the water from which the steam was generated.

If s = volume of the water in cubic feet before evaporation begins, and V = volume of the steam when the last drop of water has been evaporated, and P = external pressure in pounds per square foot, then change of volume = $\text{V} - s = u$, and the external work done = E = $\text{P}(\text{V} - s) = \text{P}(\text{V} - 0{\cdot}016) = \text{P}u$.

The value of V is very large compared with s, and the more so the lower the pressure. Thus at atmospheric pressure, V = 1644 times s, while at 200 lbs. absolute pressure, V = 141 times s.

The internal latent heat of steam (ρ) may be written in work-units, thus :

$$\rho = \text{J}(\text{L}) - \text{P}(\text{V} - s)$$

The "internal latent heat" (ρ) must be distinguished from the "internal or intrinsic energy" ($\rho + h$) of steam.

In the short Table on p. 30, particulars are given of the quantities of heat involved for a few cases of varying pressure from 1 lb. to 200 lbs. absolute pressure, and a careful study of this table will be helpful.

Taking the items in the order given—

(1) The temperature of 32° Fahr. is taken as the arbitrary starting-point from which all quantities of heat are measured.

(2) The temperature of the boiling-point increases with the pressure ; but the temperatures increase more slowly as the pressures increase (see also Fig. 18, p. 27).

(3) As the pressure under which the steam is formed increases, the steam becomes more dense, and thus the volume occupied per pound becomes smaller.

If the steam be formed at atmospheric pressure, then its volume per pound is 26·6 cub. ft., but if the pressure is increased to 200 lbs. per square inch absolute, then the volume per pound is 2·29 cub. ft., or only about $\frac{1}{12}$ of the volume at atmospheric pressure.

(4) The total heat required to generate 1 lb. of steam increases as the pressure increases, but the difference is very small. Hence the cost, or heat expenditure, per pound of high-pressure steam is very little greater than the cost per pound of low-pressure steam. Thus the total heat of steam at 200 lbs. absolute pressure is 1198, while that of steam at 100 lbs. is 1182, or a difference of 16 units of heat per pound, or 1·4 per cent. But the possible work due to expansion from the higher pressure is much greater than from the lower. Thus, expanding down to 10 lbs. from 200 lbs. initial pressure, the mean pressure is 40 lbs.; and from 100 lbs. initial pressure, the mean pressure is 33 lbs., or a gain of mean pressure of 21·2 per cent., neglecting back pressure.

(5) The value of h, or the number of units of heat per pound contained in the water itself measured from 32° to temperature of the boiling-point, increases with the pressure. It will thus be evident that boilers having a large water space, as the Lancashire and Scotch or marine boiler, carry a large store of heat in the water itself. Thus the heat contained in the water of a boiler at 200 lbs. pressure = 354·6 − 180·7 = 173·9 units per pound more than if the pressure in the boiler were at that of the atmosphere. When the pressure in the boiler falls from some high pressure to a lower pressure, the heat liberated from the water itself is capable of evaporating a certain portion of its own weight at the reduced pressure. Thus, if $t_1 - t_2$ = the difference of temperature due to fall of pressure, and L = the latent heat of steam at the lower pressure, then weight of water evaporated by heat contained within itself = $(t_1 - t_2) \div$ L lbs. per pound of water present.

Pressure per square inch (absolute) on water during evaporation	1	14·7	50	100	200
Temperature of water supplied Fahr.	32°	32°	32°	32°	32°
Temperature of water at boiling-point Fahr	102°	212°	280·8°	327·6°	381·7°
Volume of 1 lb. of steam (cubic feet)	334·6	26·64	8·414	4·403	2·29
Total heat to generate 1 lb. of steam from water at 32° Fahr. = H	1113·1	1146·6	1167·6	1181·9	1198·4
Units of heat to raise 1 lb. of water from 32° Fahr. to boiling-point = $h = t - 32$ nearly	70·0	180·7	250·2	297·9	354·6
Latent heat = E + ρ	1043·0	965·8	917·4	884·0	843·8
External work = E	61·9	72·3	77·7	81·2	84·3
Internal work = ρ	981·1	893·5	839·7	802·8	759·5
Percentage of H converted into work, E	5·56	6·30	6·65	6·87	7·02
Heat in the steam, counting from 32° Fahr.	1051·2	1074·2	1089·9	1100·7	1114·1

If, in a boiler, steam is raised to some pressure above the atmosphere

ready for starting, but with the stop-valve and all outlets closed, the surface of the water, if it could be seen, is comparatively quiescent; but on opening the stop-valve and starting the engine, or on lifting the safety-valve by hand, or in any other way relieving the pressure, however slightly, then more or less violent ebullition immediately takes place, due to the fact that the heat stored in the water is in excess of that required at the reduced pressure, and this liberated heat goes to evaporate water.

A similar effect occurs in the case of water in steam-cylinders when the pressure is reduced by expansion, or during exhaust; the heat present in the water at the initial pressure and temperature exceeds that which the water can retain at lower pressures, hence a portion of the water is evaporated from this cause as soon as the pressure falls (see "Re-evaporation," p. 112).

(6) It will be noticed that the latent heat decreases as the pressure and temperature increase. Considering the component parts of latent heat separately—

First, the heat (E) transformed into external work. The boiler, the steam-pipe, and the cylinder up to the face of the piston may be looked upon as one vessel, having a movable side, represented by the piston, by which the volume may be increased. During the formation of steam in the boiler, each successive portion of the steam generated expands from its volume as water to its volume as steam, against the resistance of the surrounding pressure; and thus, in addition to the heat contained *in* the steam, heat has been expended at the moment of formation in the boiler in doing the work of finding room for the steam, which is found by the movement of the piston. The heat thus expended in the performance of external work is the quantity E, the value of which in the table, though not quite constant at all pressures, is nearly so, increasing slowly as the pressure increases.

The heat expended in external work during formation of steam at 200 lbs. and 14·7 lbs. pressure respectively is as follows:—

$$200 \times 144 \times 2{\cdot}29 \div 778 = 84{\cdot}3 \text{ heat-units}$$
$$14{\cdot}7 \times 144 \times 26{\cdot}04 \div 778 = 72{\cdot}3 \quad \text{,,}$$
$$12{\cdot}0 \quad \text{,,}$$

or a difference of 16·8 per cent., showing the extent of the increase in the value of E between the limits of pressure given.

This heat, it should be remembered, having been expended during the process of formation of the steam, is not, and never has been, present in the steam, but was supplied as required from the original source of heat. Condensation in the cylinder of a steam-engine, therefore, so long as the cylinder is in communication with the boiler, is not due to the performance of work.

As soon, however, as cut-off takes place, the steam is no longer in communication with the original source of heat, and all the work to

be done, during the expansion of the steam from the point of cut-off till it leaves the engine, must be done at the expense of the intrinsic energy of the working fluid in the cylinder, which includes the internal latent heat of the steam ρ, and that portion of the heat of the water h which it gives up during expansion.

When steam is used in the cylinder without expansion, it is the external latent heat E which is used, and the small proportion which this bears to the total heat will be seen from the Table. Thus, for 1 lb. of steam at 100 lbs. per square inch absolute, the external latent heat E is 81·2, and the total heat from 32° Fahr. is 1181·9, or the proportion of the useful work done to the heat expended is only 6·9 per cent., and this is the maximum efficiency possible when no further attempt is made to utilize the heat still contained in the steam by making use of its expansive properties.

When steam is formed under pressure, work is done against the pressure (= PV, the product of the pressure and the volume of the steam formed), and steam condensed under pressure has work done upon it by the pressure (also = PV, or the product of the pressure and the volume of the steam condensed).

Density and Volume of Steam.—Various formulæ have been devised to show the relation between the pressure and volume of steam, and to draw the curve known as the curve of constant steam weight. This relation has not yet been determined by experiment except for a limited range of pressures. From the experiments of Messrs. Tate and Unwin, the following formula has been deduced :—

$$v = 0{\cdot}41 + \frac{389}{p + 0{\cdot}35}$$

$$\text{or } (v - 0{\cdot}41)(p + 0{\cdot}35) = \text{constant} = 389$$

where p = pounds per square inch absolute, and v = volume of 1 lb. of steam in cubic feet at pressure p.

A formula of the following form gives very accurate results :—

$$pv^n = \text{constant}$$

For dry steam the value of the index n is, according to Zeuner, 1·0646, and the constant is 479 for pressures in pounds per square inch and volumes in cubic feet, thus—

$$pv^{1{\cdot}0646} = 479$$

Rankine gave $n = \frac{17}{16}$; thus—

$$pv^{\frac{17}{16}} = \text{constant} = 482$$

or, as given by Mr. Brownlee—

$$p^{0{\cdot}941}v = 330{\cdot}36$$

$$\text{then } \log v = 2{\cdot}519 - 0{\cdot}941 \log p$$

equals the logarithm of the volume of 1 lb. saturated steam in cubic

feet. The density of steam, D (or its weight per cubic foot), is the reciprocal of the volume.

$$D = \frac{1}{V} = \frac{p^{0\cdot941}}{330\cdot36}$$

$$\text{or } \log D = 0\cdot941 \log p - 2\cdot519$$

Equivalent Evaporation from and at 212° Fahr.—It is usual, in expressing evaporation results in steam-boiler trials, to reduce them all to one common standard, namely, that of the number of pounds of water which would be evaporated with the same number of heat-units from a feed temperature of 212° into steam at 212°. If the feed water be at a temperature of 32°, then the total number of heat-units required to evaporate the water at a given pressure may be found from the table of total heat of evaporation; but if the feed water be at some higher temperature, t_f, then the heat-units required per pound are less than the total heat H from the Tables by $t_f - 32$.

$$H - (t_f - 32) = H + 32 - t = \text{heat-units per pound}$$

But the heat-units required to convert 1 lb. of water at 212° into steam at 212° = 966 units. Therefore the equivalent weight of water, W_1, evaporated "from and at 212° Fahr."—

$$W_1 = W \times \frac{H + 32 - t_f}{966} \text{ lbs.}$$

EXAMPLE.—A boiler evaporates 9 lbs. of water per pound of coal, working at a pressure of 90 lbs. absolute, feed temperature 60°: find the equivalent evaporation from and at 212° Fahr.

$$W \times \frac{H + 32 - t_f}{966} = 9 \times \frac{1179\cdot6 + 32 - 60}{966} = 10\cdot728 \text{ lbs.}$$

where W = weight evaporated from actual feed temperature.

Incomplete Evaporation. Wet Steam.—It has been assumed so far that, during the evaporation of the 1 lb. of water, the whole of the water is completely evaporated to dry steam. But, in practice, the steam from steam-boilers always contains more or less moisture in suspension. Sometimes the moisture present is considerable. The total heat required to produce wet steam is, of course, less than that to produce the same weight of dry steam, by the latent heat which would be necessary to convert the proportion of moisture present into steam. This is an important point to bear in mind in estimating the evaporative efficiency of steam-boilers, and many impossible results have been claimed for boilers through neglect to estimate the quality of the steam obtained as to dryness. Thus, suppose a boiler to supply perfectly dry steam at a pressure of 90 lbs. absolute, corresponding to a temperature of 320° Fahr.; temperature t of feed-water = 60° Fahr. Then the total heat of evaporation—

$$= H - (t - 32)$$
$$= 1179\cdot6 - (60 - 32)$$
$$= 1151\cdot6$$

Or the total heat of evaporation might be written—

$$Q = xL + h_1 - h_f$$

where x = the dryness fraction of the steam. Then, if $x = 1$, which is the case for perfectly dry steam—

$$\begin{aligned} Q &= 889{\cdot}6 + 290 - 28 \\ &= 1151{\cdot}6 \end{aligned}$$

The values of h and L are obtained from the steam tables, or may be calculated.

If the steam supplied by the boiler, instead of being perfectly dry, contains say 10 per cent. of suspended moisture, then the heat expended per pound of wet steam—

$$\begin{aligned} &= Q = xL + h_1 - h_f \\ &= (0{\cdot}9 \times 889{\cdot}6) + 290 - 28 \\ &= 1062{\cdot}64 \end{aligned}$$

If the steam from the boiler is assumed to be dry, and the 10 per cent. of moisture present is neglected, the evaporative efficiency of the boiler will be exaggerated. For 1151·6 units of heat from the coal will evaporate 1 lb. of water from feed-water at 60° Fahr. into dry steam at 320° Fahr. But the steam containing 10 per cent. of moisture only actually requires 1062·6 units of heat, and therefore the weight of water which will appear to be evaporated under the latter conditions $= \frac{1151{\cdot}6}{1062{\cdot}6} = 1{\cdot}086$ lb., or 8·6 per cent. more than the maximum quantity possible had the steam been dry.

It is equally important, in determining the economy of steam-engines, to be aware of the quality as to dryness of the steam supplied to the engine, otherwise the engine may be debited with using a weight of steam a portion of which it has not received as steam, but as water.

Dryness Tests for Steam.—The methods adopted to determine the condition of the steam supplied by a boiler as to dryness are various.

1. The Barrel Calorimeter.—A common though somewhat rough method, unless done with great care, is that of the barrel or tank calorimeter. It consists, in its simplest form, of a barrel placed on a weighing-machine and partly filled with a certain weight of cold water, into which steam is carried by a pipe reaching nearly to the bottom of the barrel, and having a perforated end. An arrangement is also fitted for stirring and properly mixing the hot and cold water. The increase of temperature after the addition of a certain weight of steam to the cold water is carefully taken. If—

W = original weight of cold water,

w = weight of steam (wet or dry) blown in,

t_1 = temperature of cold water,
t_2 = temperature of water after addition of steam,
t_3 = temperature of the steam,
L = latent heat of the steam at given pressure,
x = pounds of dry steam supplied,
Then—

$$\underbrace{x\mathrm{L} + w(t_3 - t_2)}_{\text{Heat lost by steam.}} = \underbrace{\mathrm{W}(t_2 - t_1)}_{\text{Heat gained by water.}}$$

or—

$$x = \frac{\mathrm{W}(t_2 - t_1) - w(t_3 - t_2)}{\mathrm{L}}$$

Or, in words, if the heat gained by the water, namely, $\mathrm{W}(t_2 - t_1)$, is reduced by the portion of heat given up by the water added which entered as steam and with the steam, namely, $w(t_3 - t_2)$, the remainder of the heat must be due solely to the latent heat of the dry steam supplied. If, therefore, this remainder be divided by the latent heat L of dry steam at the given pressure, the quotient gives the weight of dry steam supplied.

EXAMPLE.—If a barrel or tank contains 200 lbs. of water at a temperature of 60° Fahr., and 10 lbs. of moist steam be added at a pressure of 85 lbs. absolute, thus raising the temperature of the water to 110° Fahr., find the percentage of moisture in the steam. (Latent heat of steam at 85 lbs. pressure absolute = 892. Temperature 316°.)

Then—

$$x = \frac{\mathrm{W}(t_2 - t_1) - w(t_3 - t_2)}{\mathrm{L}}$$
$$= \frac{200(110 - 60) - 10(316 - 110)}{892}$$
$$= 8{\cdot}9 \text{ lbs. of dry steam}$$

or—

$$\frac{10 - 8{\cdot}9}{10} \times 100 = 11 \text{ per cent. of moisture}$$

2. The Separating Calorimeter, shown in Fig. 20, is designed by Prof. R. C. Carpenter. It consists of two vessels, one within the other, with a steam space between. The wet steam is supplied through the pipe F, and the water contained in it, after striking the convex surface of the bottom of the cup N, is thrown outwards against the sides of the cup, passes through the small holes or meshes in the side of the cup, and falls into chamber C. The cup N serves to prevent the current of steam from carrying away with it water which has already been deposited in chamber C. The steam now freed from moisture passes away at the top of the cup N into the outside

chamber D, and is discharged at the bottom of the vessel through an orifice, H, of known area, which is so small that the steam in the calorimeter suffers no sensible reduction in pressure.

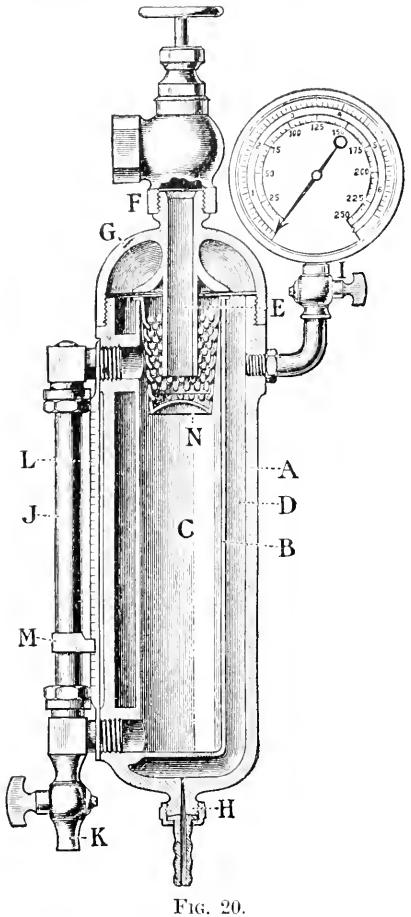

FIG. 20.

The pressure in the outer chamber D, and also the weight of steam discharged at H in a given time, is shown by separate scales on the pressure-gauge.

The rate of flow of steam through a given orifice depends upon the pressure, and this rate is determined by trial, and the outside scale on the gauge is graduated accordingly.

The readings give the weight discharged in ten minutes. By Napier's law the flow of steam through an orifice from a higher to a lower pressure is proportional to the absolute steam pressure, until the pressure against which the flow takes place equals or exceeds 0·6 of that of the vessel under pressure.

If W = weight of steam flowing through orifice H by gauge reading, and w = weight of moisture separated at K—

$$\text{The quality of the steam } x = \frac{W}{W + w} \times 100$$

$$\text{the amount of moisture} = (1 - x) = \frac{w}{W + w} \times 100$$

The Throttling Calorimeter was invented by Prof. C. H. Peabody. The form described here is a modification of it by Prof. R. C. Carpenter. The action of this calorimeter depends upon the fact that the total heat of steam at high pressure is greater than that

at low pressure, and on falling in pressure the excess of heat is liberated, and goes first to evaporate any moisture present, and then to superheat the steam at lower pressure, if the excess of heat is sufficient.

In the figure (21), the steam passes from the main steam-pipe at boiler pressure into the vessel C, where it falls nearly to atmospheric pressure, and passes away by the exhaust opening at bottom of vessel.

The temperature of the steam in vessel C is taken by the thermometer as shown, and this temperature is then compared with the normal temperature of the steam due to its pressure.

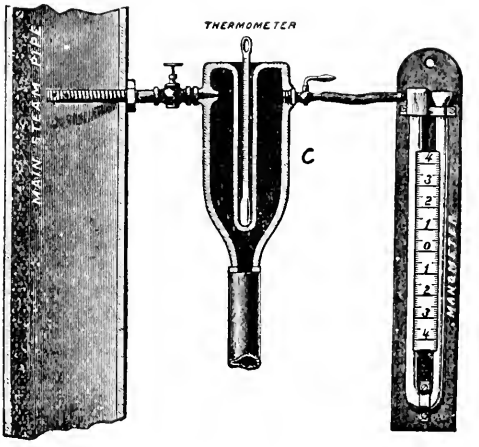

FIG. 21.

The pressure of the steam in the calorimeter, above the atmosphere, is read from the manometer or U-tube shown in the figure. This reading, added to that of the barometer, gives the absolute pressure in the calorimeter.

EXAMPLE.—The total heat in 1 lb. of steam at 100 lbs. pressure absolute is 1182, and that in 1 lb. of steam at 20 lbs. absolute is 1151, and if the steam were allowed to expand from 100 lbs. in the steam-pipe to 20 lbs. pressure in vessel C without doing external work, the units of heat liberated per pound = (1182 − 1151) = 31. If the steam in vessel C is at 20 lbs. absolute pressure, its latent heat is 954 units. The weight of moisture which the excess heat will evaporate will therefore be 31 ÷ 954 = 0·032 lb.

If, however, the amount of moisture present was less than this, then the balance of the excess heat would superheat the remaining steam above its normal temperature, and the excess would be shown by the thermometer. In such a case the percentage of moisture may be computed from the formula given below. If the moisture present is greater than the excess heat can evaporate, then no superheating takes place, and this calorimeter would not be applicable. It is, however, very accurate within the limits of its action, namely, with steam containing not more than from 2 to 3 per cent. of moisture.

If t_1 = temperature of steam in main steam-pipe, t_2 = temperature in vessel C into which the steam has been expanded to a lower pressure, and t_3 = normal temperature of steam in C due to its pressure; then total heat per pound of steam carried into calorimeter = $h_1 + x\mathrm{L}_1$. In the calorimeter, the heat in the steam due to its reduced pressure

$= h_3 + L_3$ when the moisture is just evaporated ; and if there is sufficient excess heat to superheat the steam, then heat required $= 0{\cdot}48\ (t_2 - t_3)$.

Then—

$$h_1 + xL_1 = h_3 + L_3 + 0{\cdot}48(t_2 - t_3)$$

or—

$$x = \frac{h_3 - h_1 + L_3 + 0{\cdot}48(t_2 - t_3)}{L_1}$$

Expansion of Steam.—We have seen (p. 32) that when saturated steam is worked without expansion, only about from 6 to 8 per cent. of the heat expended is converted into useful work. It will now be shown how further work can be obtained from the steam by expanding it in a cylinder after communication with the boiler has been cut off, by making use of as much as possible of the internal energy contained in the enclosed steam before exhausting it into the air or condenser.

When steam is admitted to the cylinder for a portion of the stroke only, the piston being driven forward during the remainder of the stroke by the internal energy of the enclosed steam, the diagram of work is similar to that shown in Fig. 22.

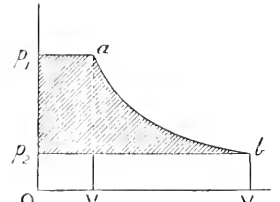

FIG. 22.

Let Op_1 = initial pressure of steam ; OV_2 = length of stroke ; p_1a = line of constant pressure of steam during admission and while communication is open between boiler and cylinder ; a = point of cut-off ; ab = expansion line representing fall of pressure from p_1 to p_2 during expansion of the steam from OV_1 to OV_2.

Here the steam is expanded from pressure p_1 to pressure p_2, and exhausted against a back pressure p_2.

The *total or gross work* performed = area of whole figure Op_1abV_2O.

The total work done *during admission* = area Op_1aV_1. This is all the work which the steam would do if there were no expansion.

The total work done *during expansion* = area V_1abV_2.

The work performed *against back pressure* = area Op_2bV_2.

The *net or effective* work done = area $p_2p_1abp_2$.

Then of the total work done, the work gained by using the steam expansively is shown by the area V_1abV_2, and this area is increased the higher the initial pressure and the greater the number of times the steam is expanded.

The Table in the Appendix gives the factor for obtaining the mean pressure during admission and expansion, having given the initial absolute pressure, or the ratio of expansion, or the number of expansions.

By "number of expansions" is meant the number of times the final volume of the steam in the cylinder contains the original volume expanded.

The Expansion Curve.—The character of the expansion curve of the

steam after cut-off depends upon the conditions as to loss or gain of heat by the steam during expansion.

Three important cases will be considered :—

1. **The Hyperbolic Curve.**—When the curve is represented by a rectangular hyperbola, or by the formula pv = constant. This curve approximately coincides with that obtained in practice, and, being simpler in construction than the other curves, is the one most usually applied to obtain approximate results by calculation of the work done in engine cylinders.

When ab (Fig. 22) is a curve fulfilling the condition pv = constant, the area of the whole figure is given as follows:

$$Oa = Op_1 \times Ov_1 = p_1v_1$$

also the area $Ob = Op_2 \times Ov_2 = p_2v_2 = p_1r_1$

The area $r_1abv_2 = p_1v_1 \times \log_e r$, where $r = \frac{v_2}{v_1}$.

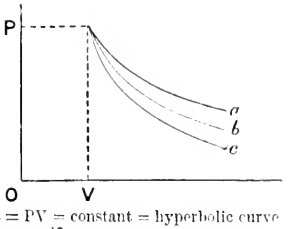

a = PV = constant = hyperbolic curve
b = $PV^{\frac{17}{16}}$ = constant = saturation curve
c = $PV^{\frac{10}{9}}$ = constant = adiabatic curve

FIG. 23.

Therefore the whole area of $Op_1abv_2 = p_1r_1(1 + \log_e r)$.

In practice there is always more or less back pressure acting against the piston, which reduces the effective work.

Thus if op_2 = back pressure, then effective work = $p_1r_1(1 + \log_e r) - p_2v_2$; but in all cases effective work = p_mv_2, where p_m = mean effective pressure throughout the stroke, and v_2 = total volume of piston displacement.

Therefore omitting clearance—

$$p_mv_2 = p_1r_1(1 + \log_e r) - p_2v_2$$

or—

$$p_m = p_1\frac{1 + \log_e r}{r} - p_2$$

where $p_2 = p_b$ = back pressure.

2. **The Saturation Curve.**—When the steam in the cylinder expands, doing external work, and receives heat during the expansion from some external source (as a steam-jacket), just sufficient to prevent any condensation of the steam taking place, the expansion curve is said to be the "curve of constant steam weight," and its condition at any point of the expansion as to volume, pressure, and temperature corresponds with the numbers given in Regnault's Tables for saturated steam. This curve may consequently be drawn for 1 lb. of steam by taking the values for volume and pressure given in the Tables.

An approximate formula given by Rankine for the curve of constant steam weight is $pv^{\frac{17}{16}}$ = constant.

3. **The Adiabatic Curve.**—This curve represents the expansion of steam without gain of heat from a jacket or any other source, or without loss of heat by radiation, conduction, or any other cause,

except the loss of the heat which is transformed into work during the expansion. Such conditions are, of course, ideal, but they serve as a useful standard with which to compare the actual results obtained in practice.

While the expansion proceeds, the weight of steam present *as steam* is continually being reduced owing to partial condensation due to the performance of work at the expense of the heat contained in the expanding steam. It will therefore be evident that the pressure will fall continuously below that of the "curve of saturation," which is the curve which would be obtained if no condensation took place.

An approximate expression for the form of the adiabatic curve is given by Rankine, namely, $pv^{10/9} = \text{constant}$.

According to Zeuner, $n = 1{\cdot}135$ for the adiabatic curve for dry saturated steam; or for wet steam when $x =$ the dryness fraction, then $n = 0{\cdot}1x + 1{\cdot}035$. Thus, given steam with 5 per cent. of wetness, then $n = (0{\cdot}1 \times 0{\cdot}95) + 1{\cdot}035 = 1{\cdot}130$. For superheated steam, $n = 1{\cdot}333$.

CHAPTER III.

TEMPERATURE-ENTROPY DIAGRAMS.

THE indicator diagram represents by an area the work done per stroke in foot-pounds, the area consisting of pressure and volume for its rectangular co-ordinates.

The temperature-entropy diagram, as applied to engineering purposes, represents the heat-units converted into work per pound of the working fluid. In this diagram the vertical ordinates represent temperature reckoned from absolute zero, and the area of the figure is quantity of heat, Q, in heat-units. The horizontal dimension is obtained by dividing the heat-units supplied during any given change by the mean absolute temperature during the change. To this horizontal dimension Clausius gave the name of "entropy."

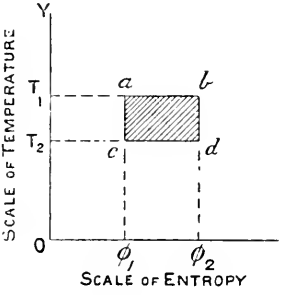

FIG. 24.

Entropy is length on a diagram whose height is absolute temperature, and whose area is energy, Q, in heat-units.

Any change of heat received or rejected results in a change of entropy, the amount of the change being equal to the sum of the heat elements added or subtracted, each being divided by the absolute temperature of the substance at the time of the change; then—

$$\text{Entropy} = \Sigma \frac{\delta Q}{T}$$

The Greek letter θ (*theta*) was used by Maxwell to stand for absolute temperature, and ϕ (*phi*) was used by Rankine and by Maxwell to denote entropy. Mr. Macfarlane Gray, therefore, gave the name $\theta\phi$ (*theta-phi*) to this heat diagram, just as *pv* is a name for the work diagram of pressure and volume as co-ordinates.

If, in Fig. 24, *ab* represent a line of constant temperature T_1, and *cd* the line of constant temperature T_2, also *ac* and *bd* lines of constant entropy ϕ_1 and ϕ_2 respectively, then the area *abcd* represents to scale the heat-units involved in the change of temperature of unit weight of the substance heated from temperature T_2 to T_1, or cooled from T_1 to T_2.

Change of temperature is here represented by change of vertical height of the temperature lines, and change of entropy by a change of horizontal length measured along the scale of entropy. Then the

quantity of heat, Q, involved in any cycle of operations, *abcd*, is given thus:

$$Q = (T_1 - T_2)(\phi_2 - \phi_1)$$

Isothermal lines are lines of constant temperature; adiabatic lines are lines of constant entropy.

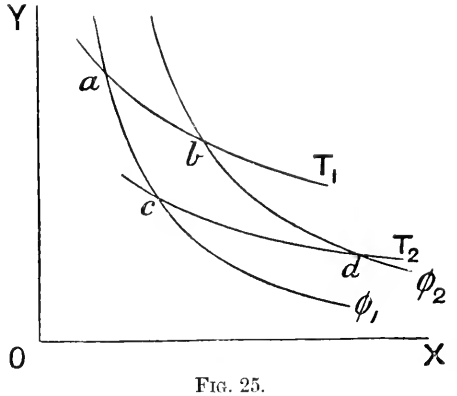

FIG. 25.

Entropy may also be expressed on the pressure-volume diagram by the intersection of adiabatics and isothermals, thus (Fig. 25) the isothermals *ab* and *cd* represent lines of constant temperature, T_1 and T_2 respectively, and *ac*, *bd* are adiabatics, or lines of constant entropy, ϕ_1 and ϕ_2. During the expansion from *a* to *b* heat has been added, though the temperature has remained constant at T_1; the change is represented by a change of entropy $= \phi_2 - \phi_1$.

During expansion from *b* to *d* the entropy is constant, and the change is represented by a change of temperature, $T_1 - T_2$.

The Temperature-Entropy Diagram for Steam.—This diagram, first proposed by Willard Gibbs, and afterwards independently by J. Macfarlane Gray, illustrates very clearly many points connected with the thermodynamics of steam, which can only be otherwise solved by more or less difficult calculation.

The construction of the diagram will be best understood by taking an actual case; thus—

(1) *Heat to raise Temperature of Water.*—Taking the case of 1 lb. of water at 32°, which it is desired to convert into steam at some temperature T_1, then the heat quantities involved in the various changes are represented as follows:—

Referring to Fig. 26, let OY and OX represent the axes of temperature and entropy; and on the vertical ordinate OY draw a scale of absolute temperature from the base line, which is the zero of temperature.

Let T_0 be the absolute temperature 493, or 32° Fahr. Then O may be taken as the zero of entropy. And entropy of water heated from T_0 to T_1

$$= \int_{T_0}^{T_1} \frac{dh}{T} = \int_{T_0}^{T_1} \frac{dt}{T} = \log_e T_1 - \log_e T_0$$

If now heat be added to the 1 lb. of water at 32°, the temperature gradually rises and the entropy also gradually increases, hence the condition of the water as to heat will be represented by the tracing

of the curve $T_0T_2T_1$, etc. The quantity of heat in heat-units supplied to the water during the change from T_0 to T_2 is represented by the enclosed area OT_0T_2a. Again, suppose T_2 to be the temperature of a boiler feed-water, and the water is heated to temperature of boiling-point, T_1, then the quantity of heat supplied to the water between temperatures T_2 and T_1 is represented by enclosed area $aT_2T_1b = A + B$ on the figure.

The horizontal dimension, or entropy, for water raised from temperature T_0 to $T_2 = oa = \log_\epsilon T_2 - \log_\epsilon T_0$, and from T_2 to $T_1 = ab = \log_\epsilon T_1 - \log_\epsilon T_2$. The curve $T_0T_1T_2$, etc., is called the "water-line."

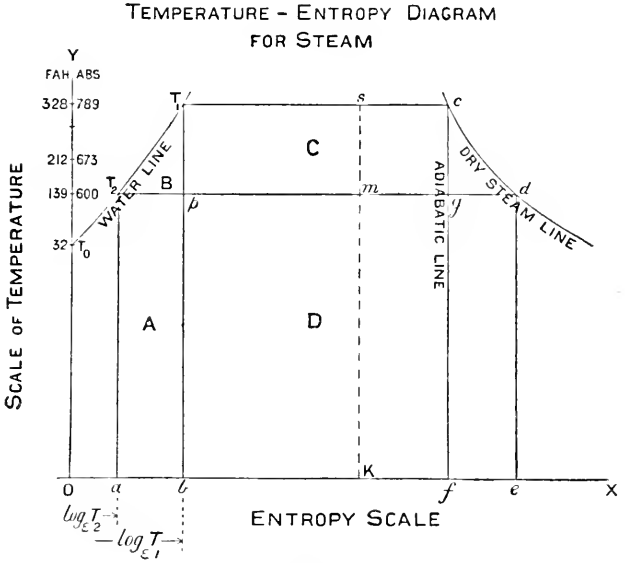

FIG. 26.

The "water-line" is practically very nearly a straight line, hence the following approximate method may be adopted, which dispenses with the use of logarithms :—

$$\text{Entropy} = \frac{\text{quantity of heat added}}{\text{mean temperature during addition}}$$

$$\text{Entropy} = \frac{(T_1 - T_2)}{\frac{1}{2}(T_1 + T_2)} \text{ approximately}$$

(2) *Heat to evaporate Water into Steam.*—When the boiling-point of water is reached, the addition of heat no longer raises the temperature, but during the formation of steam the heat is added at constant temperature; the change is an isothermal one, hence the line T_1c is horizontal, and it is extended further and further to the right as more and more heat is added. When the whole of the 1 lb. of water

has been converted into steam, the length of the line T_1c for steam at temperature T_1

$$= \frac{\text{latent heat of steam at } T_1}{\text{absolute temperature } T_1} = \frac{L_1}{T_1}$$

or total entropy of 1 lb. of steam at T_1, measured from entropy at T_0 as zero,

$$= \log_\epsilon \frac{T_1}{T_0} + \frac{L_1}{T_1}$$

The heat-units required to convert the 1 lb. of water at T_1 into steam at T_1 is represented by the area $bT_1cf = C + D$.

For steam generated from water at some temperature T_2, the entropy of the steam, or the length of the line T_2d,

$$= L_2 \div T_2$$

or total entropy of 1 lb. of steam at T_2, measured from entropy at T_0 as zero,

$$= \log_\epsilon \frac{T_2}{T_0} + \frac{L_2}{T_2}$$

The curved line cd to the right of the diagram is obtained by determining points, as explained above, for various temperatures and pressures, and drawing a free curve through the several points, c, d, etc., thus obtained. This curve is called the "dry-steam line," or the "saturation curve."

If the 1 lb. of steam at T_1 be expanded adiabatically to T_2, then the fall of temperature during expansion is represented by the fall of the horizontal line T_1c to position T_2g, so that the "state point" c moves along the adiabatic or (constant entropy) line cg, while T_1 moves downward along the water-curve to T_2.

The heat converted into work during admission at constant temperature T_1 and expansion down to $T_2 = T_2T_1cgT_2 = B + C$.

At the end of adiabatic expansion the proportion of the 1 lb. of steam which is now present as steam $= x = \frac{T_2g}{T_2d}$

$$x = \left(\log_\epsilon \frac{T_1}{T_2} + \frac{L_1}{T_1} \right) \div \frac{L_2}{T_2}$$
$$= (ab + bf) \div ae$$

The proportion of steam condensed by performance of work during expansion $= 1 - x = \frac{gd}{T_2d}$

The heat rejected to the condenser = area $aT_2gfa = D + A$.

If heat be added by a steam-jacket or other means to the expanding steam, just sufficient in quantity to prevent any condensation of the steam due to work done, the heat so added = area $fede$.

The "state point" c of the steam travels during expansion, while the steam is maintained in a dry condition, along the dry-steam line

cd. The additional work done due to the jacket heat = area cdg. The heat rejected to condenser = T_2dea.

If the steam is wet to begin with, then a vertical line may be drawn through some point s, making $\frac{T_1s}{T_1c} = x_1$ = proportion of dry steam present; also $T_1s = x_1L_1 \div T_1$, and if the steam expands, then the proportion of dry steam present at end of adiabatic expansion from T_1 to $T_2 = x_2 = T_2m \div T_2d$; or—

$$x_2 = \left(\log_e \frac{T_1}{T_2} + \frac{x_1L_1}{T_1} \right) \div \frac{L_2}{T_2}$$

Example.—If dry steam at 150 lbs. absolute and temperature 358° Fahr. expand to atmospheric pressure, find the value of x_2 when the expansion is adiabatic.

$$\begin{aligned} x_2 &= \left(\frac{x_1L_1}{T_1} + \log_e \frac{T_1}{T_2} \right) \frac{T_2}{L_2} \\ &= \left(\frac{861{\cdot}2}{819} + 0{\cdot}199 \right) \frac{673}{966} \\ &= 0{\cdot}87 \end{aligned}$$

To draw Constant-volume Curves on the Temperature-entropy Chart.—On an independent base-line XY, shown above the temperature-entropy diagram (Fig. 27), raise a scale of volumes of cubic feet

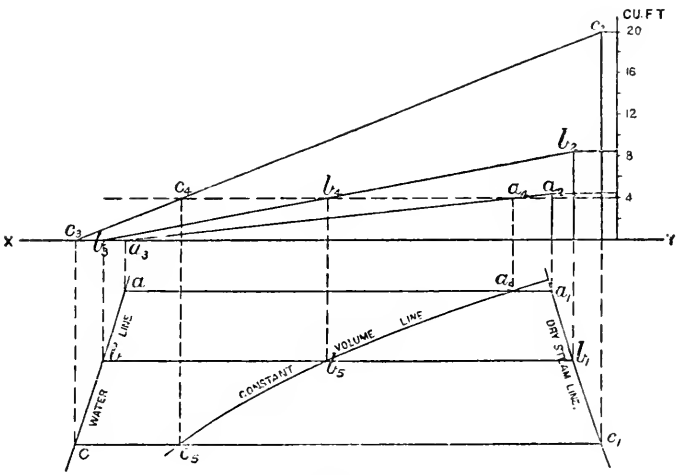

Fig. 27.

to the right of Fig. 27. From this scale of volumes set off the number of cubic feet occupied per pound of steam at the various

pressures included within the range of pressures to be represented on the diagram.

From any points, a_1, b_1, c_1, on the saturation curve raise projectors to XY, and produce them above XY, making them equal in height to the volume occupied by 1 lb. of steam at temperature a_1, b_1, c_1, etc., as shown at a_2, b_2, c_2. From a, b, and c draw perpendiculars to meet XY in a_3, b_3, c_3, and join these points to a_2, b_2, c_2 respectively.

Then, if any horizontal be drawn from the scale of volumes intersecting the lines a_2a_3, b_2b_3, etc., as at $a_4b_4c_4$, the horizontal may be considered a line of constant volume in elevation, and corresponding points may be obtained in plan by projecting from a_4, b_4, c_4, etc., to cut aa_1, bb_1 respectively in points a_5, b_5, c_5, etc. A free curve drawn through the points so obtained gives the constant-volume line $a_5b_5c_5$. Any number of further lines may be added, as shown in Plate I., which is the temperature-entropy chart as used for ordinary drawing office purposes, and containing all the lines necessary for plotting any case occurring in ordinary practice. This chart was prepared originally in this form by Captain H. Riall Sankey, to whom is due the application of the constant-volume line to the chart.

The constant-volume lines may be drawn by direct measurement; thus, if bb_1 is equal to any number of cubic feet (depending on the temperature of the steam), say 10, then bb_1 may be divided into ten equal parts, which may be numbered from left to right 1, 2, 3, etc., respectively. As each horizontal line represents in cubic feet the volume of the steam at this particular pressure, similar subdivisions may be made on other horizontal lines, and if the corresponding numbers be respectively joined, the required constant-volume lines may be drawn.

The chart Plate I. is the portion B + C of the temperature-entropy diagram Fig. 26, but the vertical scale of temperatures and pressures has been greatly enlarged, which gives the chart considerable extension vertically.

The various temperature-entropy diagrams given throughout this book have been drawn to various scales. Thus, when it was necessary to include the exhaust-waste area, a much smaller vertical scale of temperatures has been used; but where only the upper or "useful-work" portion of the diagram was required, a much-extended temperature scale is employed.

Applications of the Temperature-Entropy Diagram.—Of the total heat supplied to steam-engines, from 2 to 10 per cent. may be converted into useful work in non-condensing engines, and in multiple expansion condensing engines this percentage may be raised as high as 20 per cent. or more.

The remainder of the heat is lost by condensation in the cylinder, by radiation, and, lastly, and greater than all the rest, by the amount carried away to exhaust.

This loss of heat to exhaust may be best understood by a careful study of the temperature-entropy chart, from which it will be seen how the proportion of exhaust waste may be most effectively

reduced, namely, by using steam of the highest possible initial pressure, expanding as far as practicable, maintaining the steam in the cylinder in the driest possible condition, and finally exhausting against a back pressure reduced to the lowest possible limit.

Every unit of work obtained from the steam during expansion after cut-off is obtained by recovering a portion of the internal energy of the steam, the whole of which would otherwise pass away to exhaust unutilized. Therefore the greater the range of temperature and pressure through which the working fluid acts while doing useful work, the greater the possibility of gain by expansion, and the greater the proportion of the total heat supplied which is converted into useful work. And since the cost in heat-units per pound of steam at high pressures is very little more than for steam at low pressures, the advantage of using high pressures and large expansions will be obvious.

Several cases will now be considered, illustrating the relation between the total heat added and the heat rejected to exhaust.

Case I. *Steam generated at atmospheric pressure and exhausted into the atmosphere* at 32° Fahr.

This corresponds to the case of the generation of steam in a boiler open to the atmosphere. The heat quantities involved in this case have been already given (p. 30). The heat rejected may be considered in connection with the condensation of 1 lb. of steam in a cylinder under a movable weightless piston, the weight shown upon the piston being intended to represent atmospheric pressure (Fig. 28). If the cylinder be placed in communication externally with a cold body, the steam will be condensed, the piston will gradually fall, and, if the cooling action be continued, the whole of the steam will be reduced to its original 1 lb. of water at 32°.

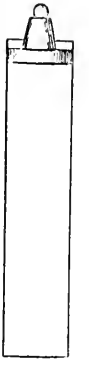

FIG. 28.

Here the heat rejected or carried away by the cooling body includes—

(1) The internal latent heat	893·6
(2) The heat of external work or work done *upon* the steam by the pressure of the air during condensation	72·3
(3) The heat lost by the water	180·7
	1146·6

And this is the same as the total heat supplied. The total heat supplied and rejected is given by the whole area of the diagram S + L (Fig. 29), and no useful work has been done.

Case II. *Steam generated at atmospheric pressure, doing work on a piston, and exhausted into a condenser at 32° Fahr., representing a pressure of 0·085 lb. per square inch.*

Here the total heat supplied per pound of steam is the same as in Case I., but the heat rejected is less, as will be understood by reference to the cylinder and piston in Fig. 28. For suppose that, when the

cooling commenced, the piston had been secured so that it could not fall as the pressure of the steam decreased, and that the whole of the steam is condensed to water at 32° Fahr. Then evidently the heat rejected is *less* than in the previous case by the amount of work done upon the steam by the falling piston under atmospheric pressure; or—

$$\begin{aligned}\text{Heat rejected} &= \text{total heat} - \text{external work}\\ &= 1146{\cdot}6 - 72{\cdot}3\\ &= 1074{\cdot}3\end{aligned}$$

for this particular case.

The result is given by the areas Fig. 30. The area *abcde* is the total heat supplied. The curved line *bd* enclosing the external-work area is the "constant-volume line," drawn as explained on p. 45, and it

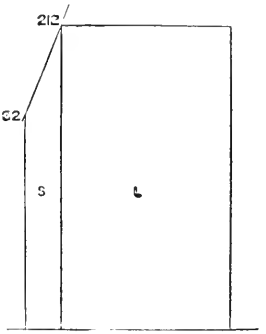

Fig. 29.

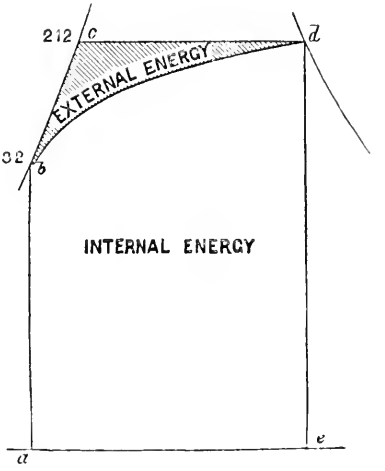

Fig. 30.

represents the gradual fall of temperature and loss of entropy of the steam during condensation at constant volume, that is, with the piston rigidly secured at the top of the cylinder while condensation takes place, till a temperature of 32° is reached. Then the heat below this line is the heat rejected;

and total heat − heat rejected = external latent heat

Thus, the constant-volume line serves the purpose also of enclosing an area representing the external latent heat, and of separating the external energy from the internal energy of the steam.

The indicator diagram for such a case is a rectangular parallelogram.

Case III. *Steam at atmospheric pressure exhausted into a condenser against a back pressure of 5 lbs. absolute.*

The effect is the same as though, when the piston had arrived

at the extreme height due to the volume of 1 lb. of steam at 212°, the piston is secured, the weight representing the atmospheric pressure removed, and a weight one-third its size placed on the piston (Fig. 31).

Here the steam will condense at constant volume till the pressure falls to 5 lbs. on the square inch, when the piston will begin to fall and the volume to decrease, and, if the cooling be continued, the whole of the steam may be reduced to 1 lb. of water at 32° Fahr.

Heat lost by water = (212° − 32°)	180·0
Internal heat	893·5
$\frac{5}{15}$ external work = $\frac{1}{3}$ of 72·3	24·1
	1097·6

The indicator or *pv* diagram for this case is represented by Fig. 32. The areas A + B represent the total work done; area A = useful work, and area B = work against back pressure.

The heat quantities involved are illustrated by the temperature-entropy diagram, Fig. 33, where area A coincides with A, Fig. 32, area B with

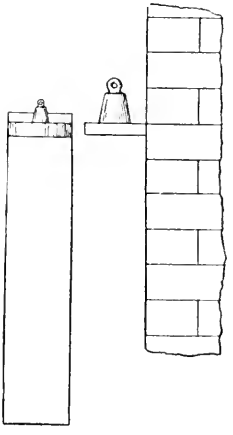

Fig. 31.

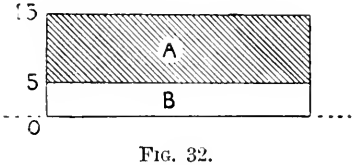

Fig. 32.

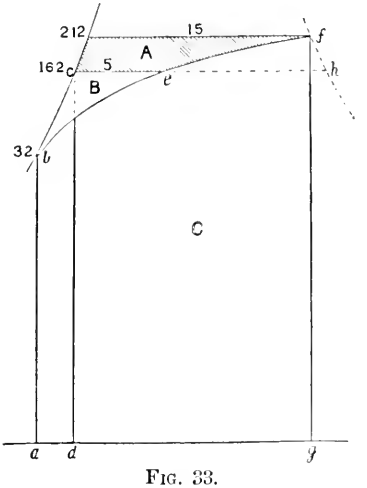

Fig. 33.

B, Fig. 32. When 1 lb. of steam condenses at constant volume from 15 lbs. to 5 lbs. pressure per square inch, the condition of the steam during the process, or the path of the state point, is traced by the constant-volume line *fe*. At *e* the weight of steam now remaining, namely, *ce* ÷ *ch* lb., continues to be condensed, but no longer at constant *volume*, but under constant pressure of 5 lbs. per square inch, during which the line *ec* is traced by the state point

till the steam has become water at temperature due to pressure of 5 lbs., namely, 162° Fahr. The temperature of the 1 lb. of water falls still further to 32° Fahr., and the heat thus given up by the water is represented by the area *abcd*. The total heat rejected in this case is given by the whole area below the cross-lined portion of the figure, namely, the area *abcefg*.

Case IV. *Showing the work done by steam at various initial pressures without expansion* (Fig. 34).

For steam of 50 lbs. pressure, admitted through the whole length of stroke and exhausted against atmospheric pressure, the work done

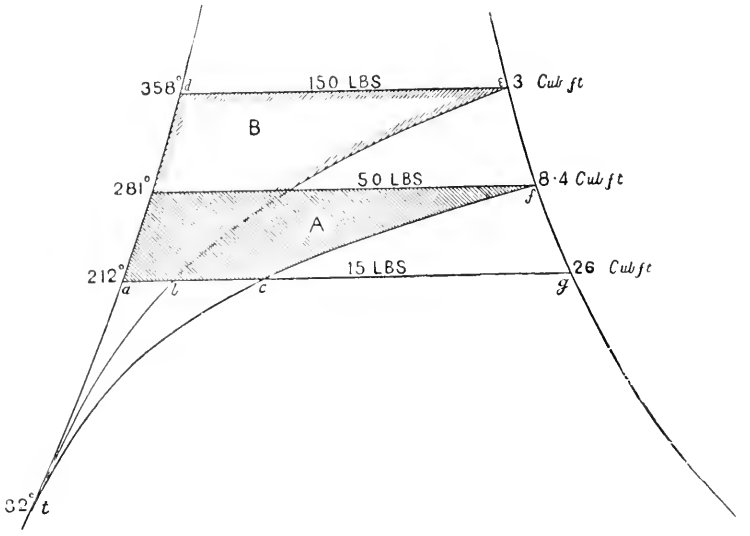

Fig. 34.

per pound is shown by the shaded area A. The value of this area in heat-units may be obtained by direct measurement with the planimeter, or it may be obtained from the steam Tables, thus: the external latent heat of steam at 50 lbs. pressure is 77·7 ; the external latent heat of ($ac \div ag$) lb. of steam at 212° = area tac = 72·3 × 8·4 ÷ 26 = 23·4, 72·3 being the external latent heat of steam at 212° Fahr., fc the constant-volume line for 8·4 cub. ft., and 26 the volume in cubic feet of 1 lb. of steam at 212°.

Then the shaded area A = 77·7 − 23·4 = 54·3 heat units, and the efficiency of the steam = 54·3 ÷ total heat of steam at 50 = 54·3 ÷ 1167·6 = 4·65 per cent., reckoning feed-water at 32°. The remainder passes away to exhaust; namely, 1167·6 − 54·3 = 1113·3 heat-units.

If, now, the pressure were raised to 150 lbs., and still worked without expansion, then the work done per pound of this steam, exhausted against atmospheric pressure, is represented by the area B

enclosed by the figure *adeb*. This area = 83 − (72·3 × 3 ÷ 26) = 74·7, and the efficiency of the steam = $\frac{74{\cdot}7}{1191{\cdot}2}$ = 6·3 per cent.

This is not a much larger efficiency than with steam of 50 lbs. pressure. The loss per pound of steam, due to the back pressure of the atmosphere, with the higher pressure of 150 lbs., namely, the triangular area *abt*, is less than the area *act*, which is the loss due to atmospheric back pressure per pound of steam at 50 lbs. pressure. The loss to exhaust is 1191·2 − 74·7 = 1116·5 heat-units, or nearly the same as before.

If steam at 150 lbs. pressure—occupying 3 cub. ft. per pound—had been used without expansion in the same cylinder which previously contained 1 lb. of steam at 50 lbs. pressure, and having a volume of 8·4 cub. ft., then the actual work done in the cylinder *per stroke* in the two cases, as distinguished from the work done *per pound* of steam will be—for 1 lb. of steam at 50 lbs. pressure = 54·3 × 778 = 42,245·4 foot-lbs., and for (8·4 ÷ 3 = 2·8) lbs. of steam at 150 lbs. pressure = 2·8 × 74·7 × 778 = 162,726·5 foot-lbs., or 3·85 times the amount with the higher pressure, and chiefly because a greater *weight* of steam has been employed.

It will be remembered that the weight of coal consumed depends, roughly speaking, upon the *weight* of water evaporated.

Case V. *Showing the effect of using the steam expansively on the extension of the useful-work area, and on the reduction of the proportion of the total heat rejected to exhaust.*

The case has been chosen of steam at 60 lbs. absolute pressure, expanded adiabatically 2, 3, 4, . . . 10 times, and working down to a back pressure of 3 lbs. Area A (Fig. 35) represents the work done during admission, all the areas being measured down to the 3-lbs. pressure line; area B represents the gain by two expansions; area C the gain by three expansions, and so on. These areas are traced off the temperature-entropy chart, Plate I. The values of the respective areas are given approximately in the following table, measured from the chart by the planimeter:—

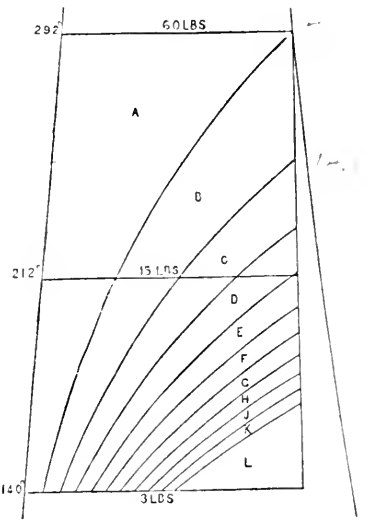

FIG. 35.

A.	B.	C.	D.	E.	F.	G.	H.	J.	K.	Total.
75	44	22	14·5	10·2	7·6	5·9	4·7	3·8	3·1	190·8

From which it will be seen that the total work done, expanding ten times, is $190{\cdot}8 \div 75 = 2{\cdot}54$ times the work done without expansion.

If a line be drawn (Fig. 35) through the 15-lbs. line of pressure, then all the area below this line down to the 3-lbs. pressure line represents the gain by working condensing, otherwise lost to exhaust.

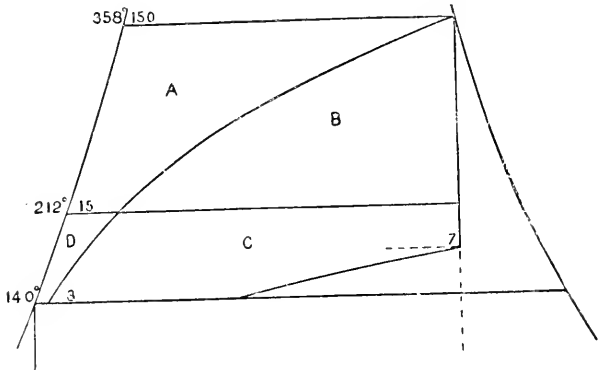

Fig. 36.

It shows, also, that with steam at 60 lbs. pressure not more than about $3\frac{1}{2}$ expansions could be used if the engine were non-condensing, and worked against a back pressure of 15 lbs.

Case VI. *Showing the effect of adding a condenser when steam of high initial pressure is used, with and without expansion.*

When the steam is used without expansion from 150 lbs. initial pressure, exhausting against a back pressure of 15 lbs., the heat converted into work is represented by area A, Fig. 36. If this steam is exhausted into a condenser, the additional work done by the steam is represented by the area D, which is only a very small proportion of the total work done. If, however, the steam is worked expansively, expanding from 150 lbs. down to 15 lbs. without condensing, then the useful-work area is increased to A + B; but, to permit of such expansion, if the weight of steam used is exactly 1 lb., the cylinder must have a capacity of about 22·5 cub. ft., instead of 3 cub. ft. as when used without expansion. Further, if a condenser be added, and expansion be carried down to, say 7 lbs., and exhausted against a back pressure of 3 lbs., the additional work done is represented by the area C. To expand the steam down to so

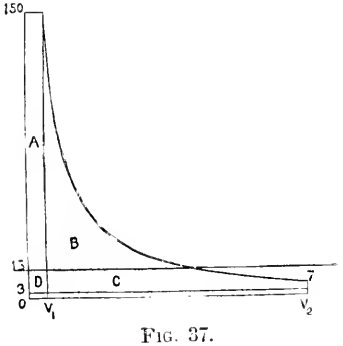

Fig. 37.

low a pressure as 7 lbs., the capacity of the cylinder must be increased to about 44 cub. ft. (see Plate I.).

From this it will be seen how the useful work obtained per pound of steam has been increased by raising the initial pressure and expanding as much as possible; but the greater the expansion, the larger the capacity of cylinder required to contain the same weight of steam at the low terminal pressure before it is finally exhausted.

The indicator or *pv* diagram for such a case is represented by Fig. 37, and the reference letters correspond in the two diagrams (Figs. 36 and 37).

The "State Point" of the Steam.—If any point be taken, as *p*, Fig. 38, on the temperature-entropy chart, then this point determines the condition of the steam as to temperature, pressure, dryness, volume, and internal energy. Thus, the horizontal line *ab* through *p* gives the temperature and pressure; also $ap \div ab$ = the dryness fraction per pound. The constant-volume line through *p* gives the volume of the steam present as steam. This volume is also equal to the volume per pound $\times\ ap \div ab$ at the pressure given by the horizontal through *p*.

The constant-volume line also separates the external energy E from the internal energy I, the area shaded below the constant-volume line and between the verticals drawn from *p* and 32° representing the internal energy *in* the steam at *p* reckoned from 32°.

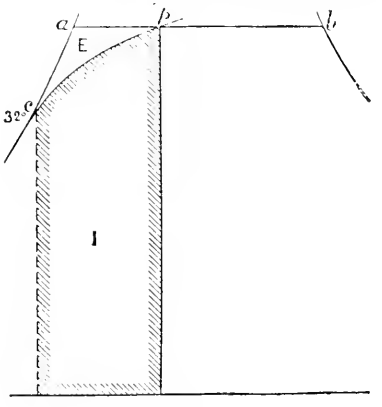

FIG. 38.

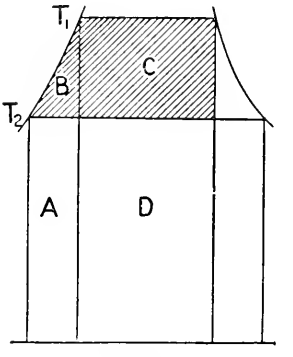

FIG. 39.

The area *apc* = E is the heat converted into work during formation of $(ap \div ab)$ lb.

$$\text{The area I} = \text{H} - \left(\text{L} \times \frac{pb}{ab}\right) - \left(\text{E}_1 \times \frac{ap}{ab}\right)$$

where H = total heat of 1 lb. of steam at temperature *a*.

L = latent ,, ,, ,,

E_1 = external latent heat ,, ,,

I = internal energy of steam at state point *p*.

Work done per Pound of Steam during Admission and Expansion.—1. Referring to Fig. 39, it will be seen that the work done (U) in heat-units per pound of steam during admission at temperature T_1, with adiabatic expansion to temperature T_2, and exhausted at that temperature, = areas B + C; or—

$$\begin{aligned} U &= \text{area (C + B)} \\ &= \text{area C + area (B + A) - area A} \\ &= L_1 \frac{(T_1 - T_2)}{T_1} + (T_1 - T_2) - T_2 \log_e \frac{T_1}{T_2} \quad . \quad . \quad (1) \end{aligned}$$

assuming the specific heat of water at all temperatures = 1, and $h_1 - h_2 = T_1 - T_2$; or approximately—

$$U = L_1 \frac{(T_1 - T_2)}{T_1} + (T_1 - T_2) - T_2 \frac{T_1 - T_2}{\frac{1}{2}(T_1 + T_2)} \quad . \quad (2)$$

The formula given for the latent heat, L, of steam is $1114 - 0{\cdot}7t$; or if t be expressed in degrees absolute temperature, then—

$$\begin{aligned} 1114 - 0{\cdot}7t &= x - 0{\cdot}7(t + 461) \\ x &= 1437 \\ \text{or } L &= 1437 - 0{\cdot}7\ T \end{aligned}$$

The formula (1) then becomes—

$$U = (1437 - 0{\cdot}7T_1)\left(\frac{T_1 - T_2}{T_1}\right) + (T_1 - T_2) - T_2 \log_e \frac{T_1}{T_2} \quad (3)$$

2. To find the value of U for a case where the steam expands adiabatically from T_1 to T_2 and exhausts against a back pressure T_3, as in Fig. 40.

$$\begin{aligned} U = (1437 - 0{\cdot}7T_1)\left(\frac{T_1 - T_2}{T_1}\right) + (T_1 - T_2) - T_2 \log_e \frac{T_1}{T_2} \\ + \frac{144(p_2 - p_3)V_2}{778} \quad . \quad . \quad . \quad . \quad . \quad . \quad . \quad . \quad . \quad . \quad . \quad . \quad (4) \end{aligned}$$

The whole of the expression, except the last fraction, represents area A, Fig. 40, and the last fraction represents area B. The full area $p_1T_1T_2p_3$ = A + B + C may be obtained by substituting T_3 for T_2 in equation (3). The difference (A + B + C) − (A + B) = area C, which is usually rejected, because it does not pay to expand so far.

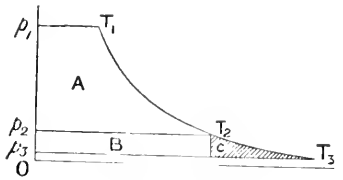

FIG. 40.

In equation (4) all the terms are known at once except V_2. In order to find the value of V_2, or, in other words, the volume of steam remaining as dry steam after adiabatic expansion from T_1 to T_2, it will be necessary to find the value of x, or the dryness fraction, at T_2, and to multiply by x the volume of 1 lb. of saturated steam at T_2 (taken from the steam Tables).

$$x = \left(\log_e \frac{T_1}{T_2} + \frac{L_1}{T_1}\right) \div \frac{L_2}{T_2} \text{ (see p. 44)}$$

3. The work done per pound of *wet* steam expanding adiabatically from T_1 to T_2 and exhausting at T_2, when the proportion of dry steam to begin with $= x$; then—

$$U = xL_1\frac{(T_1 - T_2)}{T_1} + (T_1 - T_2) - T_2 \log_e \frac{T_1}{T_2} \quad . \quad . \quad (5)$$

4. The following formula, similar in form to that given by Rankine, gives the work done by 1 lb. of steam, expanding from T_1 to T_2, the steam remaining *saturated* or at constant steam weight during expansion. This result might be produced by jacketing.

$$U = \underbrace{1437 \log_e \frac{T_1}{T_2} - 0{\cdot}7(T_1 - T_2)}_{\text{Area A.}} + \underbrace{\frac{V(p_2 - p_3)144}{778}}_{\text{Area B.}}$$

(Fig. 41) where V = volume of 1 lb. of saturated steam at pressure p_2. If the steam expands down to p_2 and exhausts at p_3, then the last fraction disappears from the equation.

5. The same results, as already given, may be stated in a somewhat different form; thus, the work done during adiabatic expansion per pound of steam is done at the expense of the internal energy of the steam, and the expressions for the internal energy are as follows :—

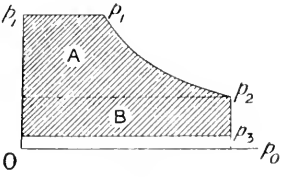

Fig. 41.

At beginning of expansion $= h_1 + x_1\rho_1$
at end of expansion $= h_2 + x_2\rho_2$

hence work done during expansion is equal to the difference of these two quantities $= J(h_1 - h_2 + x_1\rho_1 - x_2\rho_2)$ foot-lbs.

where J = 778.

Then, to find the net work U done per pound of steam during admission and adiabatic expansion down to back-pressure line, and exhausting against back pressure where $x_1 = 1$—

work done during admission $= p_1v_1$;
work done during expansion $= J(\rho_1 - x_2\rho_2 + h_1 - h_2)$
work done during exhaust $= p_2x_2v_2$

$$U = J(\rho_1 + \frac{1}{J}p_1v_1 - x_2\rho_2 - \frac{1}{J}p_2x_2v_2 + h_1 - h_2) \quad . \quad . \quad (1)$$

Note.—$\rho_1 + \frac{1}{J}p_1v_1 = L_1$, where ρ_1 = internal latent heat, $\frac{1}{J}p_1v_1$ = external work in heat-units, and L_1 = latent heat per pound of steam at pressure p_1; then—

$$U = J(L_1 - x_2L_2 + h_1 - h_2) \text{ foot-lbs.} \quad . \quad . \quad . \quad . \quad . \quad . \quad (2)$$

But by equation, p. 45—

$$x_2 L_2 = \left(\frac{L_1}{T_1} + \log_\epsilon \frac{T_1}{T_2} \right) T_2$$

Substituting in equation (2), and expressing in heat-units—

$$U = L_1 \frac{T_1 - T_2}{T_1} - T_2 \log_\epsilon \frac{T_1}{T_2} + h_1 - h_2 \quad . \quad . \quad . \quad (3)$$

Flow of Steam.—When steam flows from a vessel A (Fig. 42) under pressure p_1 into vessel B against back pressure p_2, then the total internal energy of the steam at p_1 before expansion $= h_1 + x_1\rho_1$; and after expansion adiabatically to some less pressure p_2, the internal energy $= h_2 + x_2\rho_2$. The work done upon the steam in AB $= x_1 P_1 V_1$, where V_1 = volume per pound at P_1. The work done by the steam in AB against $P_2 = x_2 P_2 V_2$, where V_2 = volume per pound at p_2.

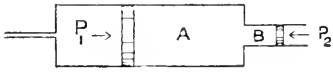

FIG. 42.

If v_1 = velocity of the steam at beginning of expansion, and v_2 = velocity at end of expansion, then $\frac{v_2^2 - v_1^2}{2g}$ = the gain of kinetic energy of the steam; and energy supplied = energy remaining + energy expended; therefore—

$$J(h_1 + x_1\rho_1) + x_1 P_1 V_1 + \frac{v_1^2}{2g} = J(h_2 + x_2\rho_2) + x_2 P_2 V_2 + \frac{v_2^2}{2g}$$

If the initial velocity v_1 is zero, then the final velocity is obtained from the following equation:—

$$\frac{v_2^2}{2g} = J(h_1 - h_2 + x_1\rho_1 - x_2\rho_2) + x_1 P_1 V_1 - x_2 P_2 V_2$$
$$= J(h_1 - h_2 + x_1 L_1 - x_2 L_2)$$

Thermal Efficiency.—Steam-engine efficiency may be expressed in various ways;[1] thus—

1. The proportion of the total heat supplied which is converted into useful work is called the *absolute thermal efficiency.*

2. The ratio between the heat converted into work in the actual engine, and that which an ideal engine would convert into work when working between the same limits of temperature, is called the *standard thermal efficiency.*

The standard thermal efficiency will evidently depend upon the particular kind of ideal engine cycle chosen with which to compare the actual engine, and this is a matter about which there is much variety of opinion.

The efficiency of the **Carnot cycle** ideal engine will be made clear for the case of steam by referring to Fig. 43. Considering the case of 1 lb. of water raised to the maximum temperature T_1 and

[1] See paper by Captain H. Riall Sankey, *Proc. Inst. C.E.*, vol. cxxv. p. 182.

converted into steam at that temperature. During evaporation the steam is supplied throughout at the constant temperature T_1, represented by the movement of the vertical line through p towards the right of the figure till p coincides with k, and corresponding with admission line ab in Fig. 44. Areas C + D represent the heat-units added = the latent heat of evaporation at T_1. The steam is then expanded adiabatically down to the lower limit of temperature T_2 represented by the line km (Fig. 43), and bc (Fig. 44). During the return stroke of the piston, suppose that the

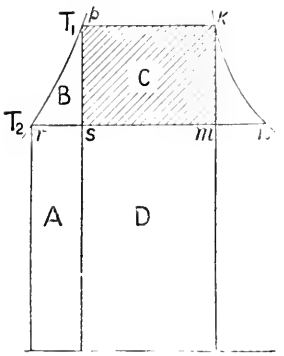

Fig. 43.

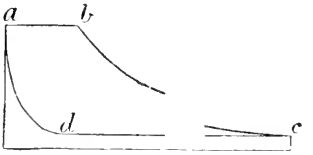

Fig. 44.

steam is now condensed within the cylinder itself by cooling, so that, when the piston has returned along the line cd to d, the volume has been reduced to $rs \div rn$ of the volume of 1 lb. of steam at T_2; then the heat abstracted by cooling is equal to area D.

The last step is now to compress, if possible, the mixture of steam and water enclosed as represented by da (Fig. 44), and along the adiabatic line sp (Fig. 43), so that it may become 1 lb. of water raised from temperature T_2 to T_1 by the work of compression; the heat supplied by the compression being equal to the areas A + B. Then the heat supplied during the cycle = areas C + D; the heat rejected = area D; the heat converted into work by a perfect engine working according to this cycle = C. Therefore the efficiency of the Carnot cycle

$$= E = \frac{C}{C + D} = \frac{T_1 - T_2}{T_1}$$

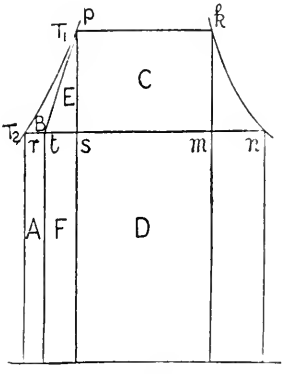

Fig. 45.

It will be noticed, however, that in the steam-engine the portion of the cycle represented by the fourth step, namely, adiabatic compression, is very imperfectly performed, because in the actual engine only the steam retained in the cylinder at beginning of compression, namely, $rs \div rn$ of 1 lb., is actually compressed; the remainder, having been exhausted and condensed at temperature T_2, must be heated to T_1 by addition of heat from the boiler. The efficiency of such an arrangement is shown by Fig. 45.

If the ideal engine expels the proportion $sn \div rn$ of its steam (by weight), heat has to be supplied to the boiler to raise the temperature of this portion of condensed steam from T_2 to T_1, and this heat is represented by the areas E + F, where $st = \frac{sn}{rn} \times sr$. The absolute efficiency of such a steam-engine working with compression of a portion only of the steam supplied

$$= \frac{C + E}{C + E + F + D}$$

which is less than that of the Carnot cycle, though greater than if there had been *no* compression.

The arrangement of heating the feed-water by doing work upon it is known as the "dynamic feed-water heater."

The **Clausius Cycle**[1] is described in four stages as follows :—

1. Feed-water raised from temperature of exhaust to temperature of admission steam.
2. Evaporation at constant admission temperature.
3. Adiabatic expansion down to back pressure.
4. Rejection at the constant temperature corresponding with the back pressure.

These stages are represented in Fig. 46, thus: T_2 is the temperature of the feed-water and of the exhaust steam; area A + B is the heat added to the feed-water to raise it to steam-admission temperature, T_1. During evaporation in the boiler, C + D is the latent heat added per pound. The expansion being adiabatic, and being continued to the back-pressure line, the corner *m* in Fig. 46 is sharp, and coincides with *c* (Fig. 47). Compare with Fig. 49,

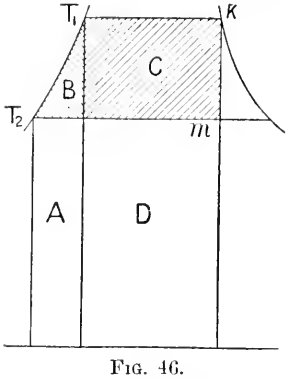

Fig. 46.

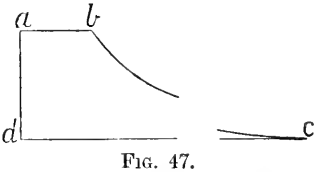

Fig. 47.

where the expansion is not carried down to back pressure. The last stage is to condense this steam at constant temperature T_2 by abstraction of heat D + A during the return stroke of the piston, till the 1 lb. of water is returned at the original feed-temperature, T_2.

The heat converted into work by a perfect engine working under these conditions is represented by the area C + B; and for the Clausius cycle—

[1] This cycle has now been adopted by the Inst. C.E. as the standard of comparison for steam-engines, and is called by them the "Rankine cycle," it having been published simultaneously and independently by these two investigators.

$$\text{Absolute thermal efficiency} = \frac{B + C}{A + B + C + D}$$

This cycle is evidently less efficient than the Carnot cycle, $\frac{C}{C + D}$

The **Rankine dry steam cycle** differs from the Clausius cycle—

(1) By addition of heat to the cylinder to maintain the steam dry throughout the period of expansion;

(2) By not carrying the expansion so far as to the back pressure, but ceasing the expansion at some pressure p_2 higher than the back pressure p_3.

These effects are illustrated in Fig. 48, where during expansion heat has been added, making K*n* the expansion line instead of K*m*, the additional heat from a jacket or other source being represented by the area *hkng*. This added heat has been sufficient to render the steam dry during expansion, and to cause the expansion line to coincide with the saturated-steam line; but it will be seen that the efficiency of this heat is very low, being *mkn* ÷ *hkng*.

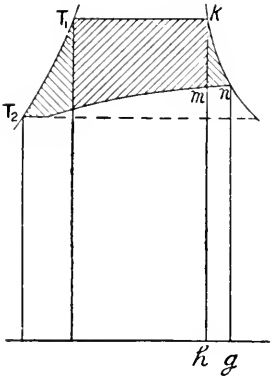

Fig. 48.

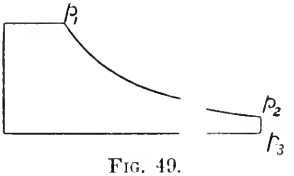

Fig. 49.

The effect of incomplete expansion is seen by the area lost between the shaded area and the back-pressure temperature line through T_2, shown dotted.

Weight of Steam required per Hour per I.H.P. by the Ideal Engine.—The number of foot-pounds of work performed per hour per horse-power = 33,000 × 60 = 1,980,000; or in heat-units, 1,980,000 ÷ 778 = 2545. Then, if U = the number of units of heat converted into work per pound of steam, and S = the pounds of steam required per horse-power per hour—

$$S = \frac{2545}{U} \text{ lbs.}$$

from which the weight of steam per I.H.P. per hour for the ideal engine can be calculated.

In practice, owing to various losses, some weight of steam, W, greater than S is always required. Then efficiency of the engine = E = S ÷ W.

CHAPTER IV.

THE SLIDE-VALVE.

The slide-valve, as its name implies, is a valve which slides to and fro, opening and closing ports or passages for the flow of steam to or from the cylinder.

The functions to be performed by the valve include (1) admission of the steam to the cylinder to give an impulse to the piston; (2) to cut off the supply of steam when the piston has travelled a certain portion of the stroke; (3) to open a passage just before the completion of the stroke, for the escape or exhaust of the steam from the cylinder; (4) to close the exhaust passage before the piston reaches the end of the return stroke, to secure a certain amount of "cushioning."

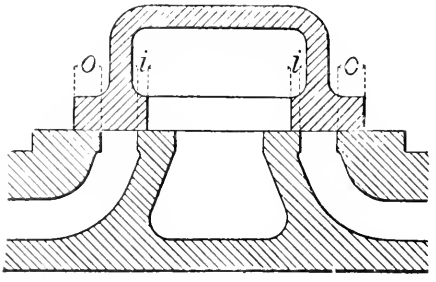

Fig. 50.

Lap of a Valve. — The amount by which the valve overlaps the outside edge of the port when the valve is in the middle of its stroke, is called the *outside lap* (see parts *o*, *o*, Fig. 50). Similarly, the amount by which the valve overlaps the inside edge of the port when the valve is in the middle of its stroke, is called the *inside lap* (see *i*, *i*, Fig. 50).

Lead of the Valve.—"Lead" is the amount by which the valve uncovers the port when the piston is at the beginning of its stroke (see Fig. 52). The lead to exhaust is always greater than the lead to steam admission (Fig. 52).

The way in which these various functions are fulfilled for both the forward and backward strokes of a double-acting engine may be seen from the Figs. 51–54.

Fig. 51 shows the valve in its middle position and closing both ports, in which position the amount of lap, or overlap, of the valve may be measured.

Fig. 52 shows the piston at the end of the stroke, and the valve

just opening the steam-port to admission of steam. This port opening is the *lead.*

Fig. 53 shows the slide-valve at the end of its stroke. It does not necessarily open the steam-port fully for admission, but it

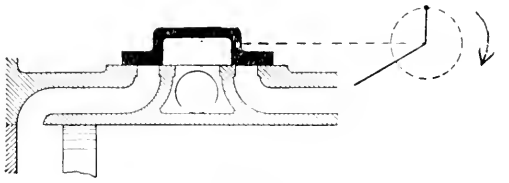

FIG. 51.

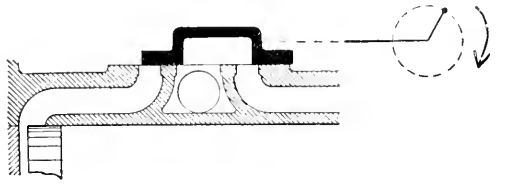

FIG. 52.

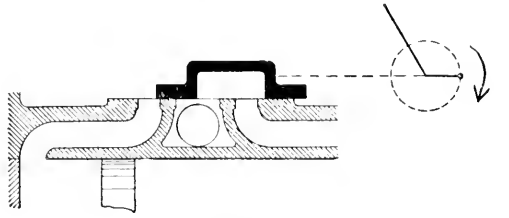

FIG. 53.

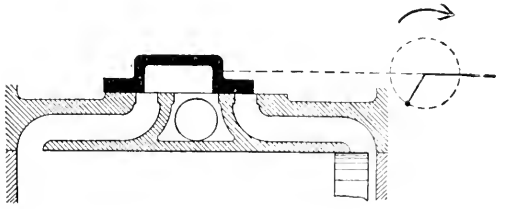

FIG. 54.

always opens fully to exhaust when the valve is at the end of its travel.

Fig. 54. Here the piston is at the other end of its stroke, and the valve has opened the opposite port by an amount equal to the lead.

Double-ported Slide-valve.—For large cylinders, such as the low-

pressure cylinder of compound engines, the travel of the valve in order to open the port to supply sufficient steam would be inconveniently great. To reduce the travel, and thereby also to reduce the work to be done by the eccentric in moving the valve, the double-ported slide-valve is used, as shown in Fig. 55.

The steam-passage P of the cylinder terminates in two ports instead of one, and the steam-ports are each made one-half the width which would be necessary for a single port, and the travel of the double-ported valve is therefore only half that of the common valve for the same total area of port-opening.

The valve is so constructed that, when in the middle of its stroke, each of the four steam-ports is covered by an equal inside and outside lap, though some modification of this is made in short-stroke engines.

The steam-admission and exhaust arrangements are equivalent to that of two separate simple slide-valves. The steam is supplied to

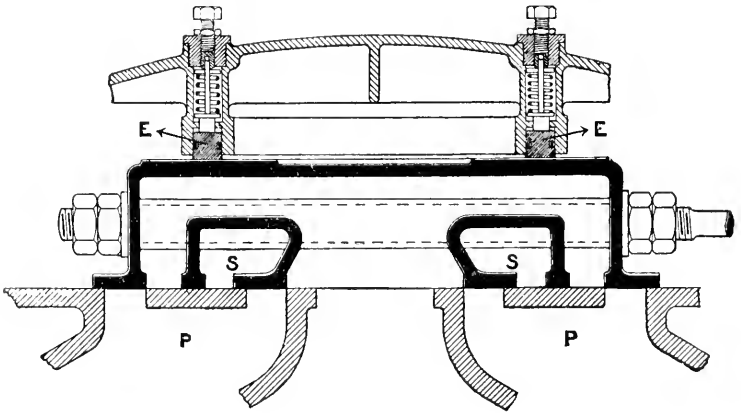

FIG. 55.

the inner admission edges of the valve by passage S, S, cast in the sides of the valve, passing through from side to side, and communicating with the cylinder when the valve uncovers the ports.

In large engines with a single flat valve the total pressure of the steam on the back of the valve would be so excessive, unless reduced by some means, that the load thrown on the eccentrics and working parts of the valve gear owing to the friction between the valve and cylinder faces would be a serious drawback to the efficiency of the engine.

To reduce this effect, an equilibrium ring, E, is fitted to the back of the valve, as shown in the figure. The ring is fitted in a circular groove, and fits steam-tight against a circular planed surface on the back of the valve. It is set up to its work against the valve by set

screws passing through the cover, which act against a spring, and can be adjusted from the outside.

The internal space between the ring and the cover is connected with the exhaust pipe or condenser, and hence a considerable portion of the total pressure on the valve is removed.

A similar arrangement of equilibrium ring at the back of the valve as used in some locomotives is shown in Fig. 56.

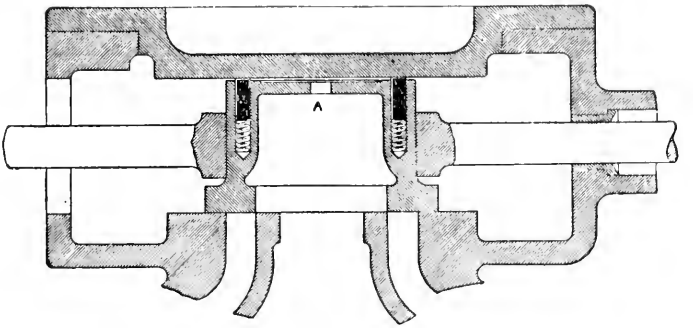

FIG. 56.

The Piston Slide-valve is a form of slide-valve which is used for high-pressure steam, to avoid the loss due to the friction of the ordinary flat valve. The piston-valve as in perfect equilibrium as

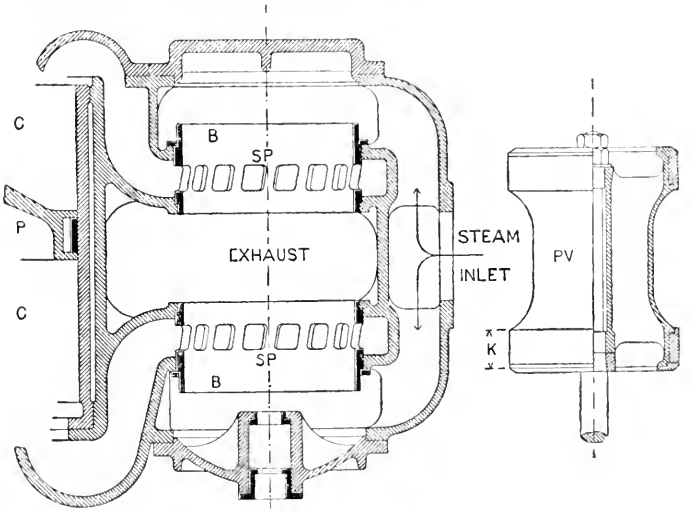

FIG. 57.

regards the steam pressure, and is much used for the high-pressure cylinder of triple-expansion engines.

It is not used for the lower-pressure cylinders, because the dimensions of the valve to give the required port-opening is large relatively to the dimensions of the cylinder itself.

The chief disadvantages with this type of valve are (1) the loss due to leakage of steam past the circumference of the valve into the exhaust passage ; and (2) the large *clearance* space, owing to the volume of the steam-passages being necessarily great with the piston-valve.

The example given in Fig. 57 shows the valve removed from the valve chamber. The valve itself, PV, consists of a double piston, the width of the pistons being the same as the width of face in an ordinary flat slide-valve, and being sufficient to cover the port when in mid-position, and to provide the necessary lap.

The valve works in two short bushes or barrels, B, in which passages, SP, are made all round the bush, which form the steam-port for admission and exhaust of steam to and from the cylinder according to the position of the valve. The steam-port, being in the form of a

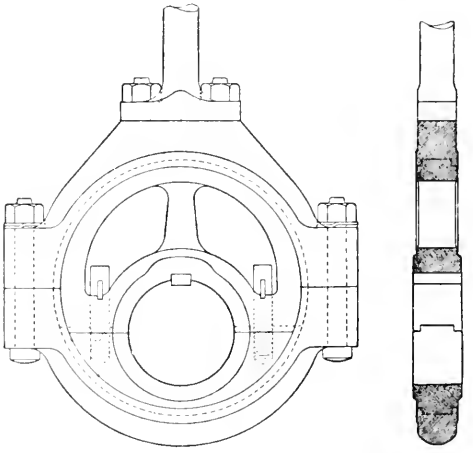

Fig. 58.

series of openings separated by bars instead of a continuous circular port, enables the spring rings, with which the larger types of piston-valves are fitted, to work to and fro over the port without catching on the edge. The steam enters as shown ; it passes to either end of the piston-valve, and, the valve being hollow, the admission steam can pass right through it from end to end. The exhaust escapes by the internal edges of the valve, and passes away by the chamber surrounding the body of the valve, the reduced diameter of this part corresponding to the exhaust chamber of the simple slide-valve.

Sometimes this arrangement of the steam is reversed, the steam being admitted at the inner edges of the pistons from the chamber

around the middle of the valve, and exhausted from the outer ends and through the interior of the valve. The latter arrangement is adopted in some cases with superheated steam.

The Eccentric, Fig. 58, is a disc fixed on the crank-shaft in such a way that the centre of the disc is eccentric, or "out of centre," with the centre of the shaft. Fig. 59 shows that the motion transmitted by an eccentric with an eccentricity CE is equivalent to that obtained from a small crank where radius is r = CE. The disc is

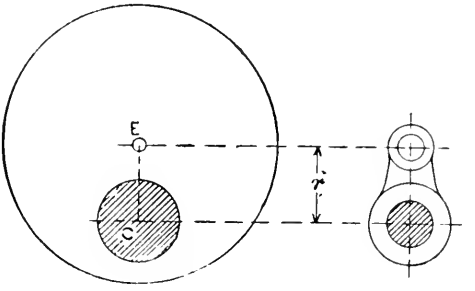

Fig. 59.

termed the *sheave* of the eccentric, and is made in halves, the halves being secured by bolts and split cotters as shown. The band surrounding the sheave is called the *strap*. The sheave rotates inside the strap in the same way as the crank-pin rotates in the connecting-rod head. The eccentric rod is attached to the strap, and the slide-valve receives a reciprocating motion from it, similar to that received by the piston from the crank-pin, but on a reduced scale.

The *angle of advance* of the eccentric is the angle in excess of 90° which the centre line of the eccentric is in advance of the centre line of the crank.

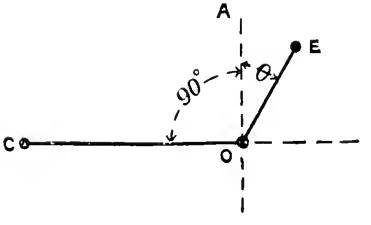

Fig. 60.

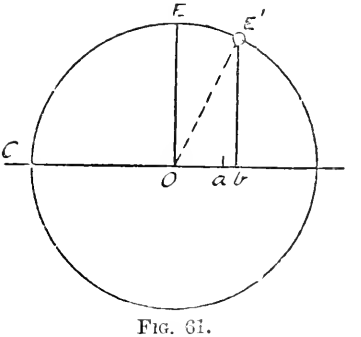

Fig. 61.

Thus, in Fig. 60, OC is the crank-arm, and OE the line passing through the centre E of the eccentric.

Then the angle AOE = θ = the angle of advance

To find the angle of advance of the eccentric, having given the travel and the lap and lead of the valve: With radius OE (Fig. 61) = radius of eccentric, or half travel of valve, describe a circle about O. Produce the centre line CO of the crank through O. Set off Oa = the lap of the valve, and ab = the lead, and from b raise a perpendicular to cut the circle in E'. Join OE'. Then EOE' is the angle of advance of the eccentric.

Let o = outside lap;
i = inside lap;
l_1 = outside lead;
l_2 = inside lead, or lead to exhaust;
ρ = radius of eccentric;
θ = angular advance;
α = any angle passed through by crank;
D = valve displacement from mid-position;
$o + l_1 = i + l_2$.

From Fig. 61 $\sin\theta = \dfrac{\text{lap + lead}}{\text{radius of eccentric}} = \dfrac{o + l_1}{\rho} = \dfrac{i + l_2}{\rho}$; $l_1 = \rho \sin\theta - o$; $l_2 = \rho \sin\theta - i$.

Valve Displacement for Given Angular Travel of Crank.—Let crank C (Fig. 62) travel through angle α from its dead centre; then the valve displacement—

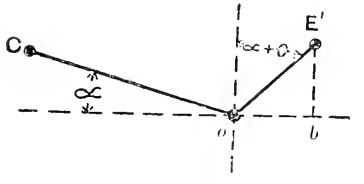

Fig. 62.

$Ob = OE' \cos E'Ob = \rho \sin(\alpha + \theta)$

Opening of port to steam $= \rho \sin(\alpha + \theta) - o$

To find the Position of the Piston for any Position of the Crank.—1. When the length of the connecting-rod is very great compared with the length of the crank-arm.

Then, if ab (Fig. 63) represent stroke of piston, and r = radius of crank, a perpendicular let fall on ab from crank position c gives a point m as the corresponding position of the piston.

$$Om = r \cos\theta \quad . \quad . \quad . \quad . \quad . \quad . \quad . \quad . \quad (1)$$
$$am = r(1 - \cos\theta) \quad . \quad . \quad . \quad . \quad . \quad . \quad . \quad (2)$$

But if the connecting-rod be comparatively short compared with r, as is the case in practice, then, in Fig. 64, let ab be the path of the piston to any scale, and aCb the crank-pin circle.

With radius equal to the length of the connecting-rod, and from a centre on ba produced towards a, draw an arc, st, touching the centre o. This may be termed the mid-travel arc; and the displacement of the piston from mid-stroke for any position, C, of the crank-pin = Cv drawn parallel to the line of stroke, ab. Take also some other position of the crank, C'. Then the displacement of the piston

from its mid-position = C′*v*. Arcs C*f* and C′*g*, drawn with radius of connecting-rod from centre on *ba* produced, also give the piston displacements O*f* and O*g* = C*v* and C′*v* respectively. The distance *vn* measures the *deviation* of the piston for positions C or C′ of the crank due to the obliquity of the connecting-rod.

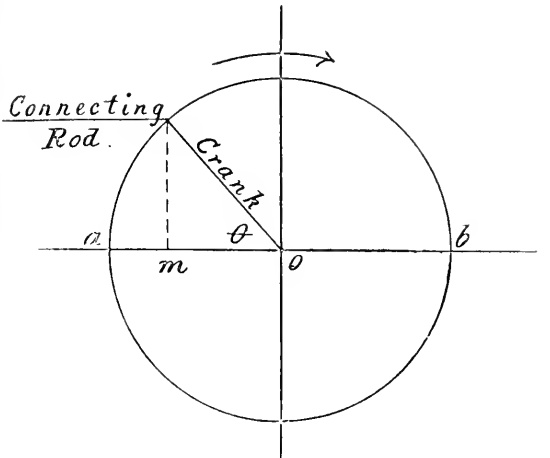

Fig. 63.

Zeuner Valve Diagram.—This diagram was first proposed by Dr. Zeuner of Dresden, and, owing to its great convenience and simplicity, is very much used.

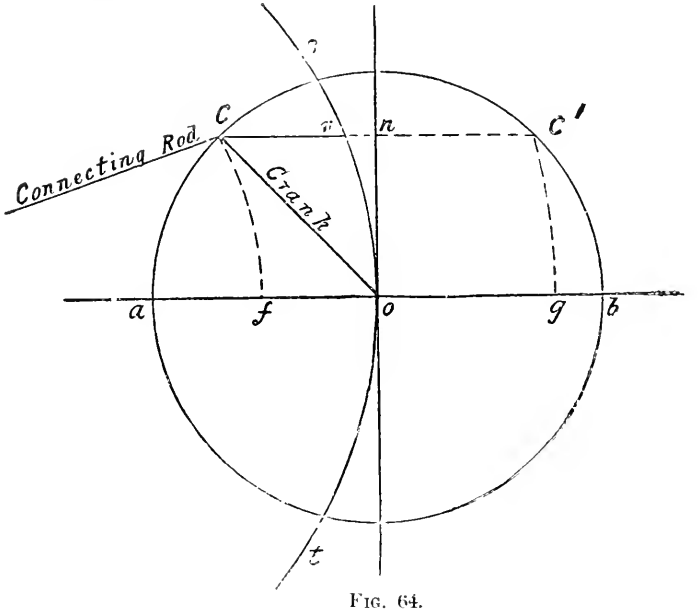

Fig. 64.

It will be best understood by reference to the following figures :—

In Fig. 65, let ab be the travel of the slide-valve, Oa the crank position, and OE the position of the centre line of the eccentric, having angular advance θ. Then a perpendicular, Ec, on ab gives Oc, the distance of the valve from its mid-position. If the crank-shaft move round on its centre so that a passes to a_1 and E to E_1, and Oc' is the distance of the valve from its mid-position for eccentric position OE_1.

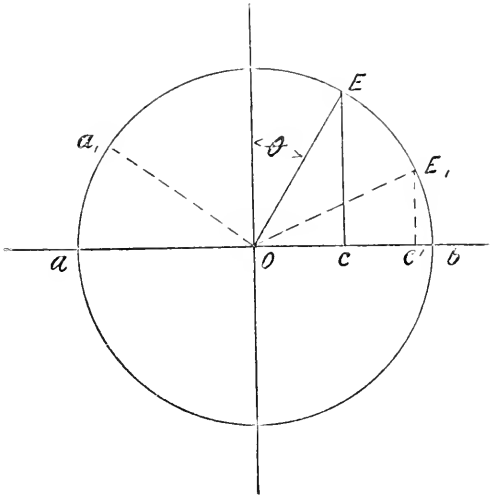

Fig. 65

Instead of the crank Oa and eccentric OE moving round the circular path, the result will be the same if the line Ob be supposed to move in the reverse direction as at b_1, b_2, etc. (Fig. 66), and perpendiculars Ec_1, Ec_2 be drawn as shown. Then all the angles Oc_1E, Oc_2E, etc., are right angles, and therefore a circle drawn upon OE as diameter will pass through the points C_1, C_2, etc. (Fig. 67), and the portion Oc_1, Oc_2, etc., of the lines intercepted by this fixed circle gives the distance of the valve from its central position for any position b, b_1, b_2, etc., of the crank.

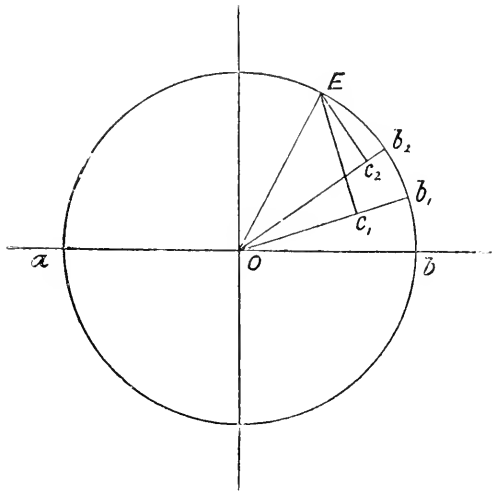

Fig. 66.

The Zeuner diagram is here given with the particulars usually required marked thereon. The connection between the valve diagram and the indicator diagram is also shown. In Fig. 68, the circle R_1, R_2, etc., is drawn with radius OR_1, equal to half the travel of the valve. The outside "lap circle" is drawn with

radius OV = the outside lap. Distance VP is set off = the lead, and the perpendicular PP_2 is raised to cut the travel circle in P_2. Then P_2OR_3 is the angular advance of the eccentric, position of crank being at OA. On P_2OR_7 draw the primary and secondary valve circles on the diameters OP_2 and OR_7 respectively, as shown. From centre O, with radius OW = the inside lap, draw the inside lap circle.

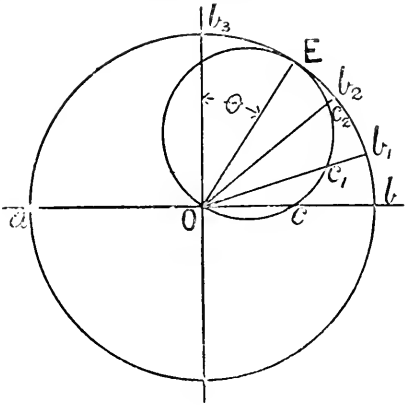

Fig. 67.

Then the real position of the crank is OA for position OP_2 of the eccentric, and for rotation in a clockwise direction. If these positions remain fixed while the radius OR_1 rotates in the opposite direction, the result will be the same as though OA and OP_2 rotated in the true direction, as already explained (Fig. 66).

Then, if OR_1 be assumed to be the position of the crank at the commencement of the stroke, the length OP, the part of OR_1 intercepted by the primary valve circle, is the distance which the valve has moved from its mid-position ; and this includes OV, the lap, and VP, the port opening, shown shaded, and which is, in fact, the lead of the valve. The opening of the other port to exhaust at the same instant is given by the length DW_3.

If a radius be drawn through B, the intersection of the valve circle with the outside lap circle, OR is the position of the crank when admission of steam begins—namely, just before the crank reaches its dead centre, R_1. Continuing the rotation of the crank, on reaching the dead centre the port is open by an amount VP equal to the lead, as already stated. The valve now continues to open the port wider, until at the position OP_2 of the crank the valve is at its maximum distance from its mid-position. The valve now commences to return towards its mid-position, and the port is gradually becoming more and more throttled till the crank reaches OR_4, where the outside lap circle intersects the valve circle. The port is then closed, and cut-off has taken place, the expansion of the steam in the cylinder commencing from this point. Expansion continues till the crank reaches OR_5, where the inside lap circle cuts the secondary valve circle when the port opens to exhaust. R_5 drawn at right angles to OP_2, or tangent to the valve circles, is the position of the crank when the valve is in mid-position.

If the valve had no inside lap, then R_5 would be the position of the crank when the exhaust port opens, and R_5 continued across the diagram would give the position of the crank at exhaust closure ; but

when the valve has inside lap, a circle is drawn from centre O with radius equal to the inside lap, cutting the secondary valve circle. Then crank positions obtained by drawing lines from centre O through the intersections of the inside lap circle and the secondary valve circle give the positions of the crank at exhaust opening and

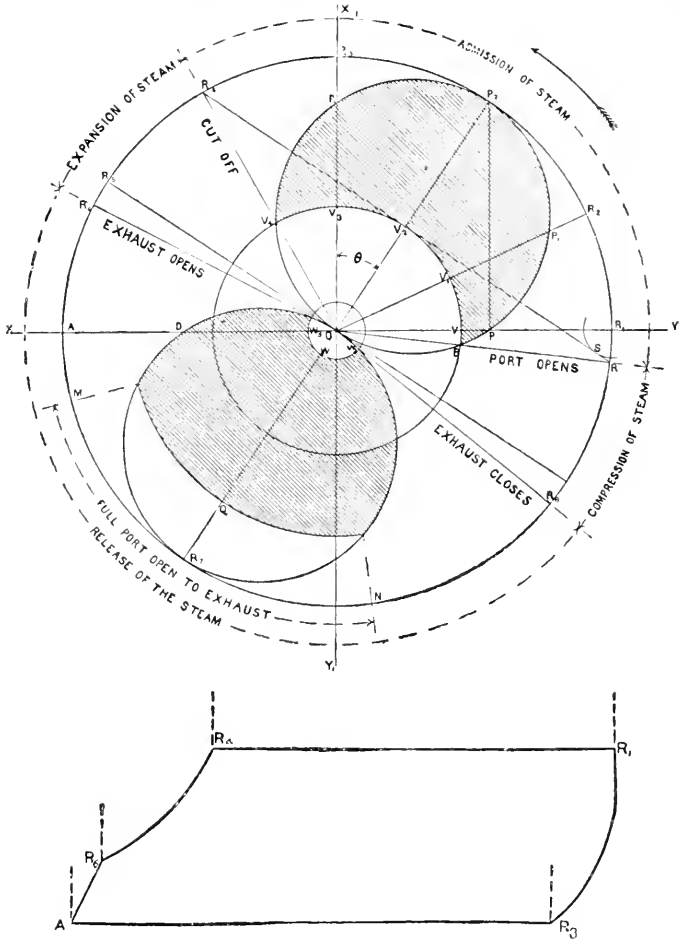

FIG. 68.

closing respectively. At M the port is fully open to exhaust; at R_7 the valve has moved a distance QR_7 past the edge of the port, thus leaving the port wide open to exhaust till the crank reaches ON, when the port begins to close till R_8 is reached, when compression of the steam remaining in the cylinder takes place, till the port opens again

for re-admission of steam. The arc through Q is drawn so that WQ = width of port.

Reuleaux or Reech Diagram.—The following diagram is known as Reuleaux's diagram in Germany, and Reech's in France.

Referring to Fig. 60, if the eccentric radius be turned back through an angle θ, then the valve would be in mid-position, and the crank would be at an angle θ behind its dead centre. In Fig. 69, let the same circle represent the path both of the crank-pin and of the eccentric centre, each to different scales. Through the centre of the circle draw DD_1,

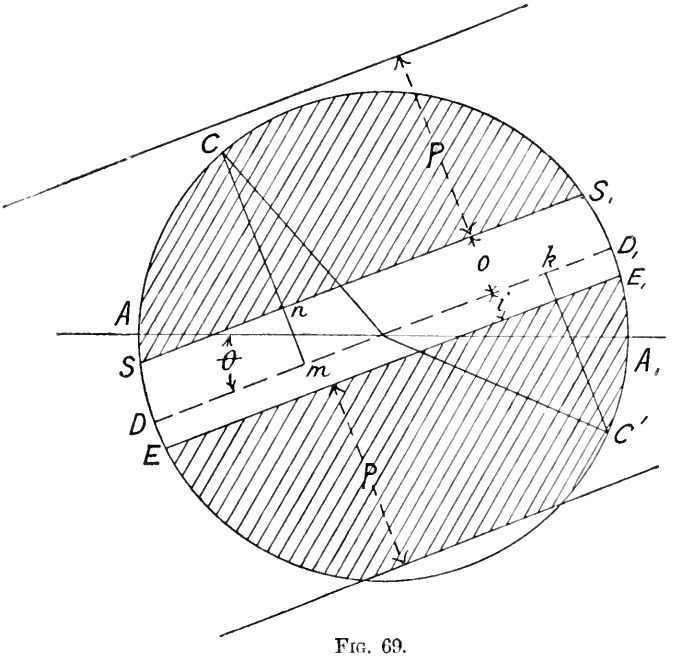

FIG. 69.

making an angle θ = the angular advance of the eccentric. Then, as explained above, D is the position of the crank when the valve is in mid-position, and DD_1 is called the mid-position line. For any position C or C′ of the crank, the displacement of the valve from its mid-position = Cm or $C'k$ drawn perpendicular to DD_1. Draw SS_1 parallel to DD′, and at a distance from it = outside lap = o, and draw EE_1 parallel to DD_1, and at a distance from it = inside lap = i.

Then for crank position C, the length Cn = the port opening to steam when the valve has travelled a distance Cm from the centre. For crank position C′ the exhaust port is open, $C'k - i$, and the valve has travelled a distance $C'k$ from its mid-position.

The diagram refers to one side of the piston only, and neglects the obliquity of the eccentric rod and connecting rod.

The lines drawn at a distance P from the lap lines represent the width of the steam port, showing on the steam side the port is not fully opened, while on the exhaust side, in this case, the valve travels beyond the edge of the port.

When the crank turns clockwise, S is the admission point, S_1 = the point of cut-off, E_1 = opening of exhaust port; E = compression. The perpendicular let fall from A on SS_1 = the steam lead, and the perpendicular let fall from A_1 on EE_1 = the exhaust lead.

This diagram teaches most clearly a number of facts of importance in practice. For example, suppose, on a given engine, the lap of the valve was decreased by removing a portion from the outside edges of the valve; then the effect would evidently be to cut off later in the stroke, which would no doubt be the object of reducing the lap, but it would also increase the lead, which would probably be an objectionable feature, and this could only be prevented by altering the angular advance of the eccentric, in other words, by making the angle θ less, until the lead was the amount required. The effect of this on S_1, E_1, and E would be to make them all later.

Again, it might be desired to increase the lead of the valve, altering nothing except increasing the angle of advance θ of the eccentric. The effect of this, it would be at once seen, would be to make all the operations of the valve at S_1, E_1, and E earlier.

Problem.—Given travel, cut-off, and lead, to find the lap and the angular advance of the eccentric.

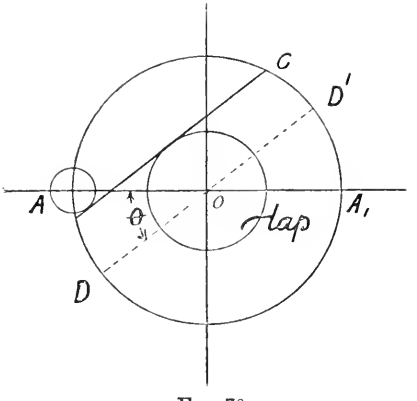

Fig. 70.

Draw circle from O with radius OC = half travel (Fig. 70), and draw the lead circle at A with radius = lead. Draw a line from point of cut-off C tangent to lead circle. Then a circle drawn from centre O touching this line is the lap circle, its radius being equal to the lap required. A line, DD', drawn through the centre O parallel to the lap line, makes an angle θ with AA_1 equal to the angular advance required.

Effect of Obliquity of Connecting-rod.—Taking the case of a vertical engine, and drawing the crank circle (Fig. 71) to an enlarged scale with diameter AA_1 (Fig. 72), then the effect of a short connecting-rod on the distribution of the steam on the opposite sides of the piston may be seen by the aid of the diagram. Thus (Fig. 72), DD_1 is the position of the crank when the eccentric is 90° ahead of the vertical centre line, and *st* is the mid-travel arc of the piston. Also lap-lines are drawn parallel to DD_1, and at a distance from it equal to the outside lap *o* at the top end and *o'* at the bottom

end. If o and o' are equal, then it will be seen that crank position C is the point of cut-off for the top side of the piston, and crank position c' is the point of cut-off for the bottom side. But Cm is greater than $c'n$, or, in other words, the piston is further past mid-position on the downstroke at C than on the upstroke at c', and therefore cut-off takes place later on the down-stroke than on the upstroke.

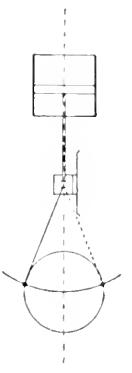

Fig. 71.

This inequality of cut-off may be reduced by altering the lap on the bottom side, making lap o' less than the top lap o. Then cut-off will take place at c_2 later than before, but the lead on the bottom will be increased (see perpendicular from A_1 on lap line through c_2 = A_1a_2, which is greater than the lead Aa'). In practice it is usual to have less lap and more lead on the bottom end of the cylinder than at the top.

Valve Ellipse.—This is a method which has been in use for many years, especially among locomotive engineers, for representing the relative positions of the slide-valve and piston.

The process is to draw two lines at right angles to one another, the one to represent the line of direction of motion of the slide-valve, and the other that of the piston.

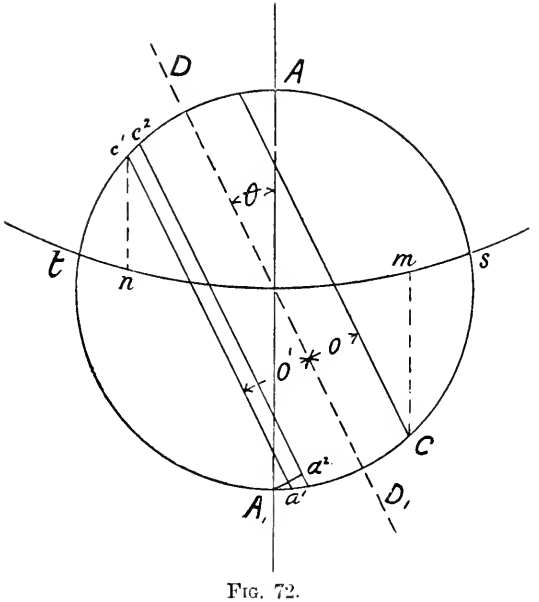

Fig. 72.

Thus, in Fig. 73, let CP represent the stroke of the piston, and let the circle through C drawn with radius OC = crank-pin path. If

this circle be divided into any number of equal parts, as shown, then, neglecting the obliquity of the connecting-rod, if a perpendicular $1a$ be let fall on CP from any position 1 of the crank-pin, a is the corresponding position of the piston. From centre O draw a circle with radius OE = radius of eccentric. If now the direction of motion of the slide-valve be assumed, for the purpose of the diagram, to be at right angles to that of the piston, the eccentric position OD must be set back 90°, and therefore OD is drawn making an angle θ with CO.

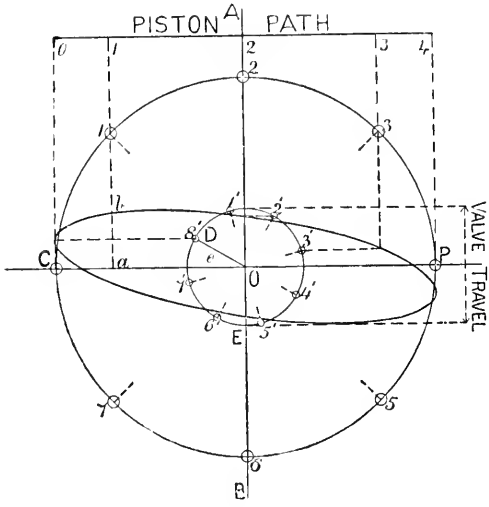

FIG. 73.

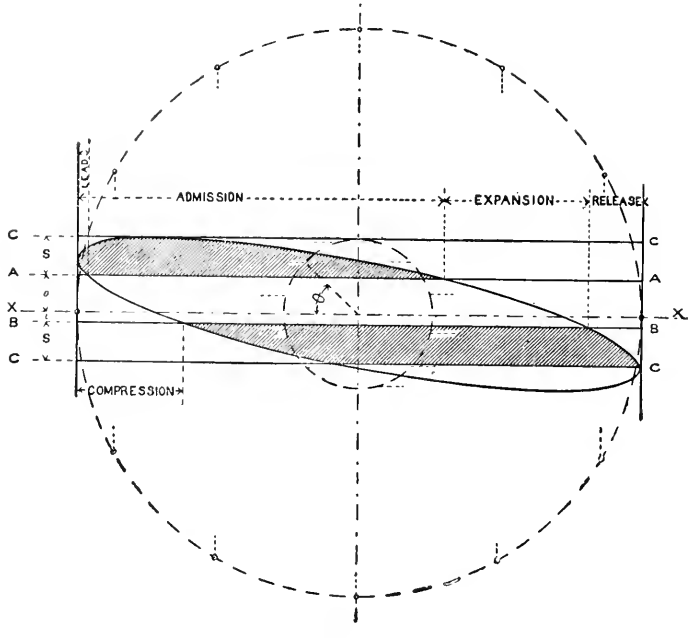

FIG. 74.

Then for crank-pin position C, eccentric position is at D. Starting from D, divide the eccentric circle into the same number of equal parts, 1′, 2′, etc., as on the crank-pin circle. Draw horizontals from the eccentric positions to intersect verticals from the crank positions, and join the intersections. The closed figure is called the "valve ellipse."

To allow for obliquity of the connecting-rod, instead of dropping perpendiculars as at 1*a*, draw arcs through points 1, 2, etc., of the crank-pin path with radius equal to length of connecting-rod from a centre on line PC produced. Similarly, to allow for the obliquity of the eccentric rod, draw arcs through 1′, 2′, etc., on the eccentric path with radius equal to length of eccentric rod from a centre on line OE produced.

In Fig. 74, if AA be set off from XX on one side of it equal to *o*, the outside lap; BB = *i* = inside lap, and CC = S = width of steam port. Then, if the valve ellipse be drawn as explained (Fig. 73), the points of admission, cut-off, release, and compression are determined by the intersection of the valve ellipse with the respective edges of the port lines AA and BB. Perpendiculars on to the centre line XX will give the piston positions at each of these points respectively.

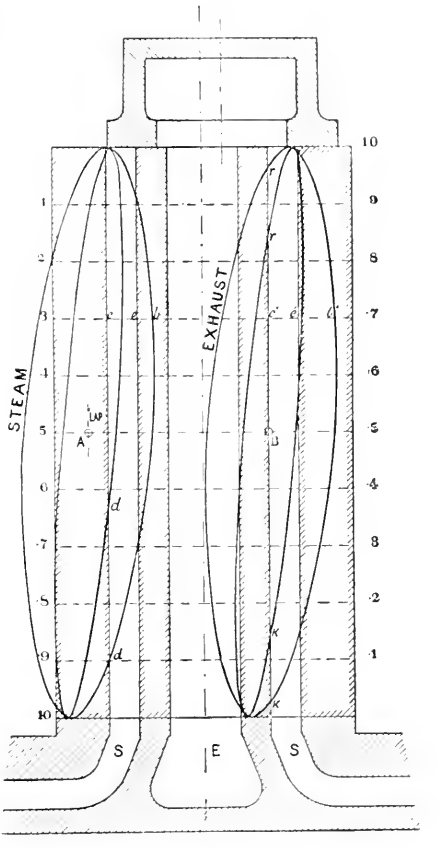

Fig. 75.

Fig. 75 shows an application of the valve ellipse to an actual case from practice. From the face of the ports S, E, S, in the sectional drawing at the bottom of the figure, lines are drawn perpendicularly to any convenient length from each edge of the respective ports, and this length is subdivided to represent equal portions of the piston-stroke. A valve ellipse is then drawn from centre A on the half-stroke line of the piston for steam at a distance = outside lap of valve from edge of port, and from centre B for exhaust on the port line, as there is no exhaust lap. The centres A and B are the positions

of the respective steam and exhaust edges of the valve in mid-position.

Several ellipses are usually drawn for different amounts of travel of the valve as the link is notched **up** (see Fig. 87).

Two ellipses are drawn in this case, and, referring to the larger ellipse, it shows for any position, say 0·3 of the piston stroke, that the steam port is not only freely open = *ce*, but the valve has moved a distance *eb* past the edge of the port; and on the other side of the piston the exhaust port is not only wide open, but the valve has moved past the edge a distance *e'b'*. The cut-off points for different amounts of travel of the valve are given at *d*, *d*; the points of release are *r*, *r*, and of compression *k*, *k*.

Expansion Valve Gears.—The importance of working steam expansively has been already explained, and a certain amount of expansion may be obtained with the common slide-valve by the addition of lap, but a cut-off not earlier than about 0·7 of the stroke can be obtained in this way, and this is usually not sufficient for economical working. The amount of additional lap necessary to cut off at any earlier point causes difficulties of other kinds, and other means have therefore been employed to obtain an early cut off of the steam-supply to the cylinder. Locomotive and marine engineers generally employ the link motion both for reversing and for regulating the degree of expansion; but for stationary engines, especially when not requiring to be reversed, a separate expansion valve is used, or some form of Corliss or drop-valve gear.

The Link Motion.—There are various kinds of link motion, but the arrangement known as the Stephenson link motion is the one almost

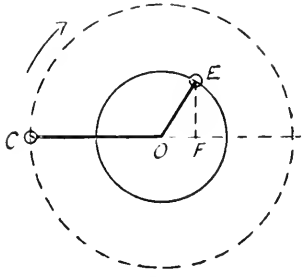

Fig. 76.

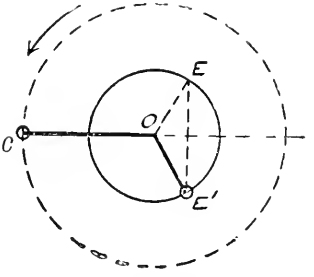

Fig. 77.

universally adopted in this country, and it is the type which will here be described.

The object of the link motion was originally to provide a ready means of reversing an engine; but it was found to be also a convenient means of regulating the expansion of the steam in the cylinder, cutting off the steam earlier or later in the stroke as desired.

As a *reversing gear* its action is as follows—

It has been shown that when the crank is in some position OC (Fig. 76), the centre line of the eccentric is in a direction OE

ahead of the crank, the direction of rotation being shown by the arrow.

But to reverse the engine, the eccentric centre must by some means be moved from E to some position E′ (Fig. 77), having a suitable angle COE′ ahead of the crank.

This is accomplished in the link motion by having two separate eccentrics, one keyed with its centre at E, and the other at E′, the ends of the respective eccentric rods being joined together by a link, as shown in Fig. 78. Then by means of a lever attached to the link, L, either eccentric, as desired, may be made to communicate its motion to the slide-valve by moving the link so as to bring one or other of the eccentric rods into line with the slide-valve rod.

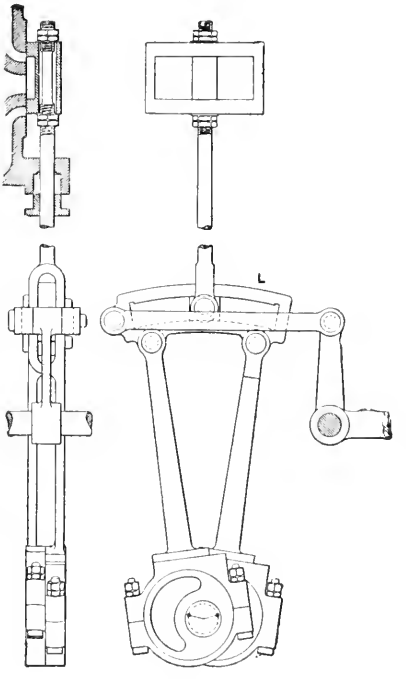

Fig. 78.

The slide-valve is connected by the valve rod to a little block which fits in the slot of the link, so that any movement of the link in the direction of the axis of the valve rod affects the position of the valve.

When the block is in the middle of the link, the valve is influenced equally by both eccentrics, with the result that the engine will not run in either direction. The nearer the block is to its mid-position in the slot, the less is the travel of the valve and the earlier the steam is cut off in the cylinder.

The Stephenson Link Motion, illustrated in Fig. 78, and shown in skeleton in Fig. 79, is made with the link concave towards the crank shaft. The centre line of the link is drawn with a radius equal to the distance between the centre of the eccentric measured along the rod to the centre line of the link. When the crank is on the centre away from the link, and the rods are attached to the nearest end of the link, as shown in Fig. 79, the rods are said to be "open." This is the usual way of connecting the eccentric rods to the link. When the crank is in the same position as before, and the rods are connected to the end of the link on the opposite side of the main centre line, as shown in Fig. 80, the rods are said to be "crossed." In the latter case, the result is not quite the same as when the rods are open. With open rods the lead increases as the

link approaches its mid-position; with crossed rods the reverse is the case. This is illustrated more fully in Figs. 86 and 88.

The paths of the moving parts of the link motion during a revolution of the crank are compounded of the movement due to the connection of the link with the eccentrics, and of that due to the connection of the link with the radius bar or drag link, SR (Fig. 79), which is free to move at the link end, but is fixed at the reversing lever end, S. The end of the link connected to the radius bar will, of course, move in an arc of a circle about this fixed centre.

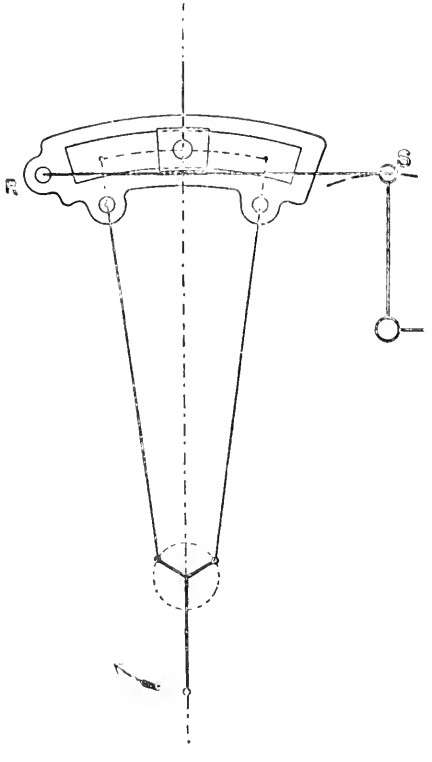

FIG. 79.

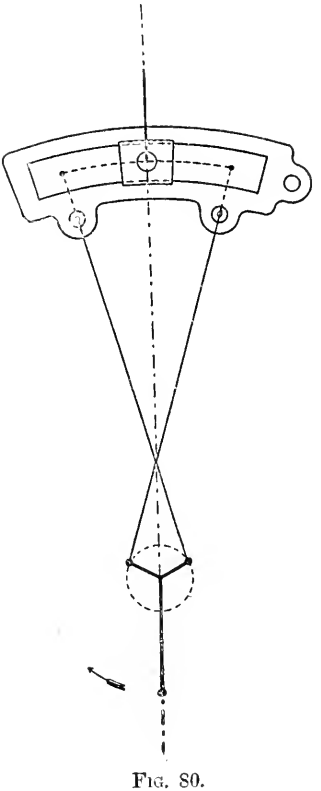

FIG. 80.

When the link is pulled right over, so that the eccentric rod is as nearly as possible in line with the valve rod, the link is said to be in "full forward gear" or in "full backward gear," as the case may be, depending on which eccentric is thrown into gear.

When the throttle-valve is closed the link must be placed so that the block attached to the slide-valve rod is in the middle of the link.

To start an engine with a link motion having open rods for a

given direction of turning of the crank shaft, the link must be moved in the same direction as it would move if it were connected rigidly to the crank shaft and turned round with it.

When the link is in "mid-gear," the travel of the slide-valve on each side of its middle position is equal to the lap of the valve plus the somewhat increased lead which the valve has in mid-gear with the open-arm link motion. The shorter the eccentric rods relatively to the valve-travel, the greater the increase in the lead as the link approaches mid-gear.

In consequence of the somewhat complex motion of the link, there is always more or less "slotting" or rubbing of the link upon the block. The nearer the block is to the point of suspension of the link, the less the slotting motion. Hence the link is usually suspended from the end nearest the forward eccentric rod, so as to reduce the wear and tear due to the slotting motion to a minimum for the most common working position of the link.

In this case, in backward gear the slotting motion is more or less considerable, but this disadvantage is conceded for the sake of the more perfect action in forward gear. When equal efficiency of the link is required in both forward and backward gear, the link is suspended from the centre.

The position of the centre, S, of the suspension rod, SR, Fig. 79, is chosen thus: Trace the path of the point R on the link to which the suspension rod is to be attached when the link is in full forward gear, for a complete revolution of the crank shaft, and without the restraint of any suspension link. Again trace the path of the same point when the link is in full backward gear.

Now, with a radius equal to the proposed length of the suspension rod, draw an arc from some centre which shall as nearly as possible bisect the irregular curved figure for full forward gear. The centre of this arc is chosen for the centre of the suspension rod in full forward gear. Similarly, with the same radius as before, bisect the irregular curve for full backward gear. The two centres thus obtained fix as nearly as possible the path of the end of the reversing lever to which the suspension rod is attached. Usually some compromise is made in favour of full forward gear.

Expansion Regulator Arm.—In compound and triple-expansion engines with link motions all connected with one reversing shaft, it is often desirable, for the sake of regulating the distribution of the power between the respective cylinders, to adjust somewhat the position of the link of the low-pressure cylinder relatively to that of the high-pressure cylinder, and to give it an earlier or later cut-off as required. This is sometimes done by the method illustrated in Fig. 81, namely, by connecting the outer end of the suspension rod S to a block, the position of which is capable of adjustment by the screw as shown. The position of the slot in the arm A is so arranged that, if the engines required to be suddenly reversed, the link may be thrown into full backward gear without the necessity for any re-adjustment of this supplementary expansion gear; for the position

of the outer centre of the suspension rod may be anywhere in the slot of the lever without its affecting to any extent the action of the link in full backward gear, as the centre line of the slot is perpendicular, or nearly so, to that of the suspension rod.

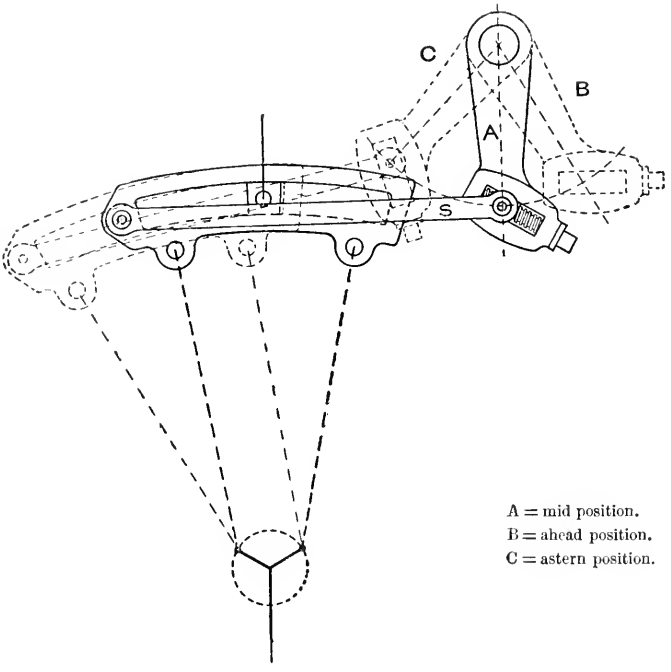

FIG. 81.

Valve Diagrams for Link Motion.—It will be convenient to consider here the case of a single movable disc, the eccentricity of which can be varied, and a variable cut-off thus obtained with a single eccentric. This arrangement is important, especially because of its application in connection with shaft governors as an automatic cut-off gear for high-speed engines.

The disc D, Fig. 82, is keyed to the crank shaft, and the adjustable disc E, with centre P, is the eccentric disc to which the eccentric rod and strap are secured. It will be seen that the disc E is secured to D, but that it may be so adjusted that the centre P may be held in any position between P and P_3. The effect of this on the distribution of the steam is well shown by the Zeuner diagram, Fig. 83. Thus C is the centre of the shaft, and CP_1P_3 in Fig. 82 is drawn to an enlarged scale in Fig. 83. Take positions P_1, P_2, P_0, and draw circles on the diameters CP_1, CP_2, CP_0; then, for position CP_1 in full forward gear, cut-off takes place at C_1, drawn through the intersection of the

lap circle with the valve circle on CP_1, and as P_1 approaches P_0, cut-off takes place earlier. When P_0 is reached the engine will be stopped, and as P_0 approaches P_3 the engine is reversed. All other points,

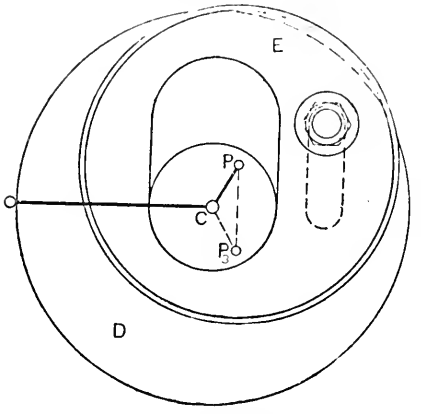

Fig. 82.

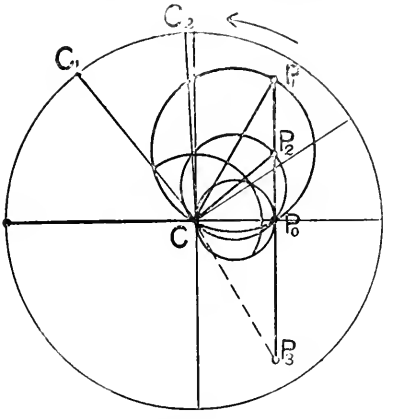

Fig. 83.

as of release, compression, and admission, may be traced in the same way.

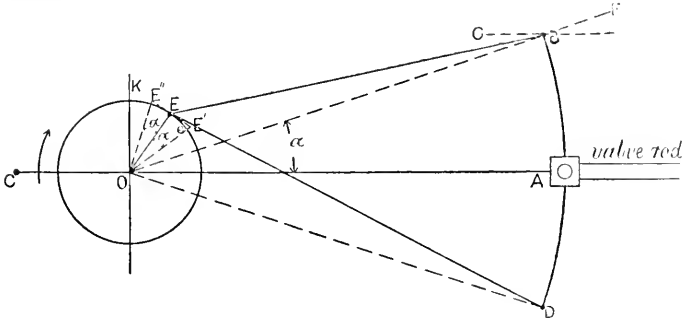

Fig. 84.

"Equivalent Eccentric," with Oblique Connecting-rods.—In Fig. 84, let OC represent the crank, and OE the eccentric with angular advance KOE, and BD a link through which motion is to be transmitted to the slide-valve. Then, if the position of the eccentric rod EB is changed to position EA, the valve receives the motion directly from the eccentric E, and the link does not affect the result. But when the eccentric rod is in position EB, it is clear that if a line be drawn through OB, the motion of B on the line OB, or OB produced, would be the same as that of A on the line OA, except that, if the valve were connected with B either directly or indirectly, the crank being as before, the respective movements of the valve

would take place earlier, because the moving backwards of the line OA through the angle a to OB is equivalent to moving the eccentric OE forward, or increasing the angular advance by the same angle. If, therefore, Oe be drawn equal to OE, and making the angle $EOe = a$, then Oe is the equivalent eccentric, which will produce the same result, if e be coupled direct to the valve moving in the line OA, as would be produced if the valve were coupled to B, driven by OE, and moving in the direction OF.

If the motion communicated at B were in the line BG, as is approximately the case in practice, the length of the

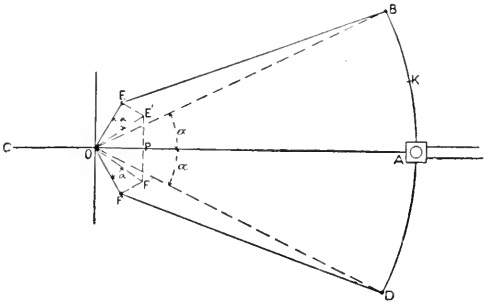

FIG. 85.

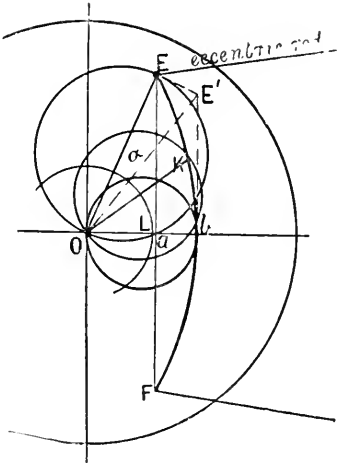

FIG. 86.

radius Oe of the equivalent eccentric is a little increased. By drawing EE′ at right angles to OE, then the line joining O to E′ and making an angle a with OE is the equivalent eccentric required.

Referring to Fig. 85, OF′ is the resultant eccentric for the end D of the link. If the rods were "crossed" as at ED (Fig. 84), instead of "open" as at EB, then the motion communicated from the point D in the line OD will be the same as from A in the line OA, except that the respective movements of the valve will be later, because the moving of the eccentric rod from OA to OD through the angle a would have the same result as reducing the angular advance of the eccentric by the same angle. Hence, if EE″ be drawn backwards from OE, at right angles to OE, and OE″ making an angle a with OE, then OE″ is the "equivalent eccentric" for the crossed rod ED.

To find the movement of the valve when the block A is situated in the middle of the link, if E′ and F′ (Fig. 85) be joined, and the point P be taken midway between E′ and F′, then OP is the resultant eccentric; and for the movement of the valve when the block is at any intermediate position K, the resultant or equivalent eccentric may be approximately found by drawing a circular arc through the points E, P, F, as shown enlarged at EbF (Fig. 86), and dividing this arc in the same ratio as BK : KD (Fig. 85), as explained below.

An application of this method, with the addition of the Zeuner

valve diagram drawn upon the equivalent eccentric radius, is useful in finding the travel, the lead, points of admission, cut-off, compression, and release for any position of the block in the link. Thus, let OE (Fig. 86) equal the eccentricity of the eccentric, and draw the angle EOE′ equal to the angle *a* (Fig. 85), and make EE′ at right angles to OE. Let fall perpendiculars from E and E′ on the horizontal through O, cutting it in *a* and *b*. Draw the lap circle OL. Then, if the extreme end of the link B (Fig. 85) is moved till it coincides with A, OE is the half-travel of the valve, and L*a* is the lead. When the link is moved so that the block is in mid-gear, then O*b* is the half-travel of the valve, and L*b* is the lead. For any intermediate position of the block A in the link, produce E*a* to F, and make *a*F = *a*E, and draw the arc of a circle through points E, *b*, and F. Then E*b*F may be looked upon as a miniature link, and if a point K be taken so that EK : KF as BK : KD (Fig. 85), then OK is the equivalent eccentric for that position of the block in the link.

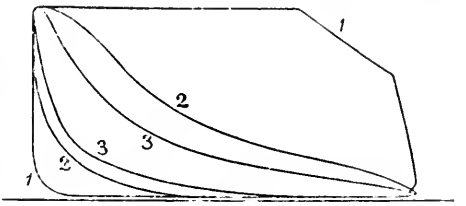

FIG. 87.

Circles drawn on OE, OK, O*b* as diameters give, by their intersections with the inside and outside lap circles, the points of admission, cut-off, etc., for the respective positions E, K, *b*, etc., of the block in the link. It will be seen, on drawing these circles, that as the link approaches mid-position the following changes occur: (1) the lead of the valve increases; (2) the travel of the valve decreases; (3) cut-off, release, exhaust closure, and re-admission take place earlier.

The effect upon the indicator diagram (Fig. 87) of "notching up" the link, or bringing the link nearer to mid-gear, may be compared with the Zeuner diagram for the respective positions. Each operation of the valve, namely, admission, cut-off, release, and compression, taking place earlier as the link approaches mid-position, the effect upon the shape of the indicator diagram, and therefore also upon the mean effective pressure of the steam in the cylinder, is very marked.

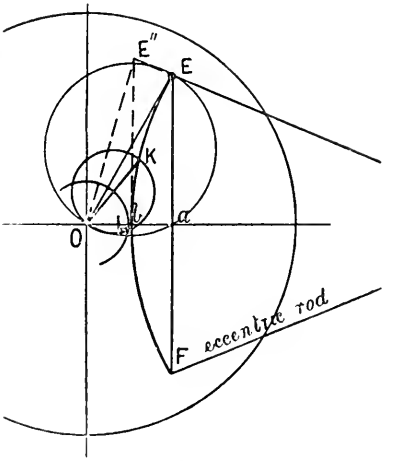

FIG. 88.

Link Motion with "Crossed" Arms.—When the eccentric rods are attached to the link as shown in Fig. 80, the effect on the steam

distribution for various positions of the link will be seen from Fig. 88. The line EE″ is drawn at right angles to OE. As before explained, OE″ is set off on the *opposite* side of OE, making an angle α with it (see Fig. 84). Then a perpendicular through E″ on the horizontal line through O gives a point b, and an arc drawn through b and E from a centre on line Ob produced, and drawn concave towards the link, gives a curve representing the path of the centres of the equivalent eccentrics as the link moves from full to mid-gear. Thus OK is the radius of the equivalent eccentric for position K of the block in the link, assuming EF to be the actual link to a reduced scale. If valve circles be drawn on OE, OK, and Ob, and the lap circle be added, it will be seen that as the link approaches mid-position—(1) the valve-travel and the port opening rapidly decrease (compare OK in Figs. 86 and 88); (2) the lead decreases; and (3) the gear may be designed so as to give no port opening when the link is in mid-position.

In setting a link motion, the port opening or lead is usually set to be the same at both ends of the stroke when the link is in *mid-gear.*

The Meyer Expansion Valve Gear.—This gear, illustrated in Figs. 89 and 90, consists of two plates sliding on the back of a main valve

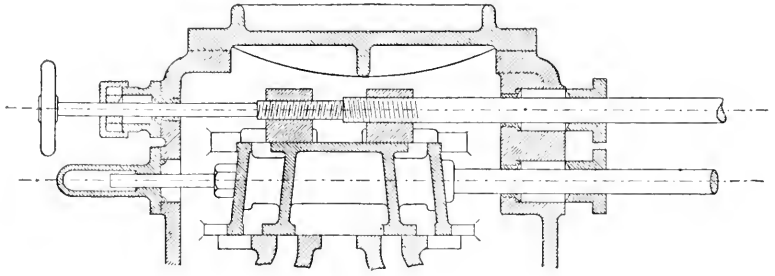

Fig. 89.

as shown. The degree of expansion is regulated by varying the distance apart of the two plates as required, by means of a right and left handed screw.

In Fig. 90, MV is the main or distributing valve, which is an ordinary simple slide-valve, with the addition of pieces at the ends to form ports, p, through the valve. EV are the expansion valve plates. Consider the expansion valve EV moving to the left; then when e reaches n cut-off takes place, and the port in the main valve MV is closed, till on the return stroke e again moves to the right of n. Evidently, by increasing the distance between the two plates of the expansion valve, the distance s between e and n—when both valves are in mid-position—is decreased, and cut-off takes place earlier.

The main valve acts as an ordinary slide-valve, and the engine might be worked with it alone if the expansion valve were entirely removed; though in that case the steam would be supplied to the

cylinder during the greater portion of the piston-stroke. The action of the expansion valve does not in any way affect the action of the exhaust through the main valve.

The relative motion of the two valves may be conveniently found by making an outline drawing of the valves and ports (Fig. 90), and drawing on the centre line above the valves, a circle representing the path of the centre of the expansion eccentric, and below the valves a circle representing the path of the centre of the main-valve eccentric, both circles to the same scale as that of the valves.

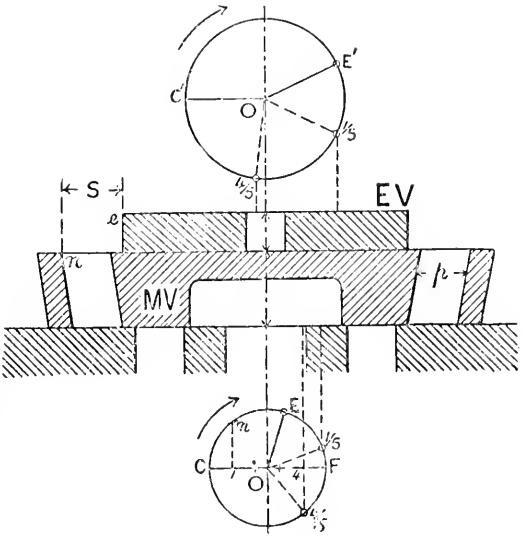

FIG. 90.

On these circles draw the relative positions of the crank and eccentrics. The main eccentric is set as for a simple valve, and the angle COE is known, having given the lap and lead of the main valve.

The expansion eccentric is usually set right opposite the crank for a reversing engine; for a non-reversing engine the angle C'O'E' is somewhat less than 180°.

Assuming the limits of cut-off, say, from 0·8 to 0·2 of the stroke, then first by the method of templets: Let templets of the valves be made preferably full size, and so that they may be moved relatively to each other, and let the crank and eccentric on the respective circles drawn above and below the figure be placed in position correctly for 0·8 stroke of the piston. Draw perpendiculars from the respective eccentric positions E and E' of the eccentrics, moved to position $\frac{4}{5}$ on the circular path, and let the centres of the respective valves coincide with these lines. Then the edge *e* of the expansion plate must be so placed as to cover the port, the centre line of the plates remaining as determined by the position of the eccentric. Proceeding similarly for the other limit, the range of opening and closing of the plates will be determined.

The plates composing the expansion valve must be sufficiently wide to prevent re-opening of the port in the main valve before the cylinder port is closed.

Application of Zeuner Valve Diagram to Meyer Valve Gear.—In

Fig. 91, if OC represent the position of the crank, OM that of the main-valve eccentric with angular advance θ, and OE that of the

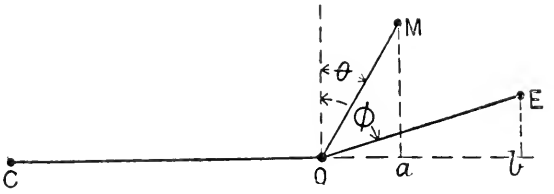

Fig. 91.

expansion valve with angular anvance ϕ, then Oa is the distance of the main valve from its middle position, and Ob the distance of the expansion valve ; also ab is the distance between the respective centres of the two valves. If now OD, Fig. 92, be drawn equal and parallel to EM, and a perpendicular Dd be let fall, then $Od = ab$, and OD

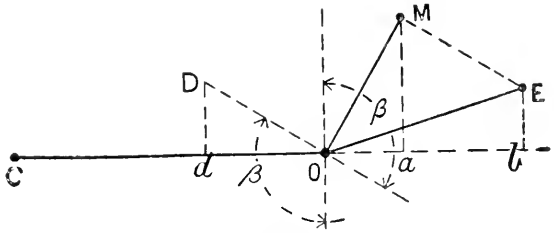

Fig. 92.

may be considered as an eccentric with angular advance β and eccentricity OD, which governs, for any part of its path, the relative position of the centres, or the relative motion of the main and expansion valves.

On OM (Fig. 93) describe the main-valve circle, and on OE describe the expansion-valve circle ; also on OD describe a circle representing the *relative-motion* circle. Then, for any position OA of the crank, Om is the distance of the main valve from its mid-position, and Oe is the distance of the expansion valve from its mid-position. Hence em is the distance between the centres of the two valves. But $Od = em$, because if lines be drawn on OA from M, E, and D respectively to m, e, and d, these lines are parallel, for each of them, forming angles in a semicircle, are perpendicular to OA. But OD and ME are equal. But when a line (as OA) cuts perpendiculars from the extremities of two equal and parallel lines (OD and EM), the perpendiculars intercept equal portions of that line ; therefore $Od = em$. And for any position OA of a crank, the radius vector Od, intercepted by the relative-motion circle, gives the relative positions of the centres of the main valve and the expansion valve respectively.

Referring to Fig. 90, we see that when the centres of the valves are at a distance apart $= en = s$, then cut-off or re-admission will take place. Therefore, if a circle be struck from centre O (Fig. 94) with radius $s = Od_5$, cut-off will take place when the crank is at OC, and re-opening of the valve port will take place when the crank is at OC'.

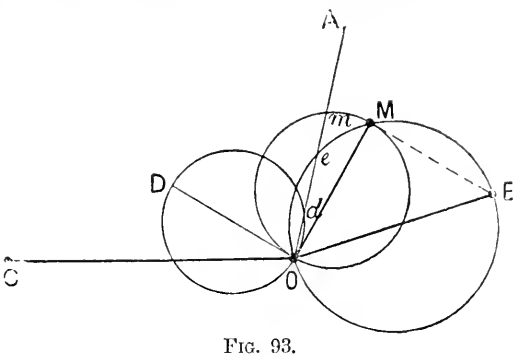

Fig. 93.

From this it will be seen that, having given the position of the crank at which cut-off is required, the value of s may be determined by the length

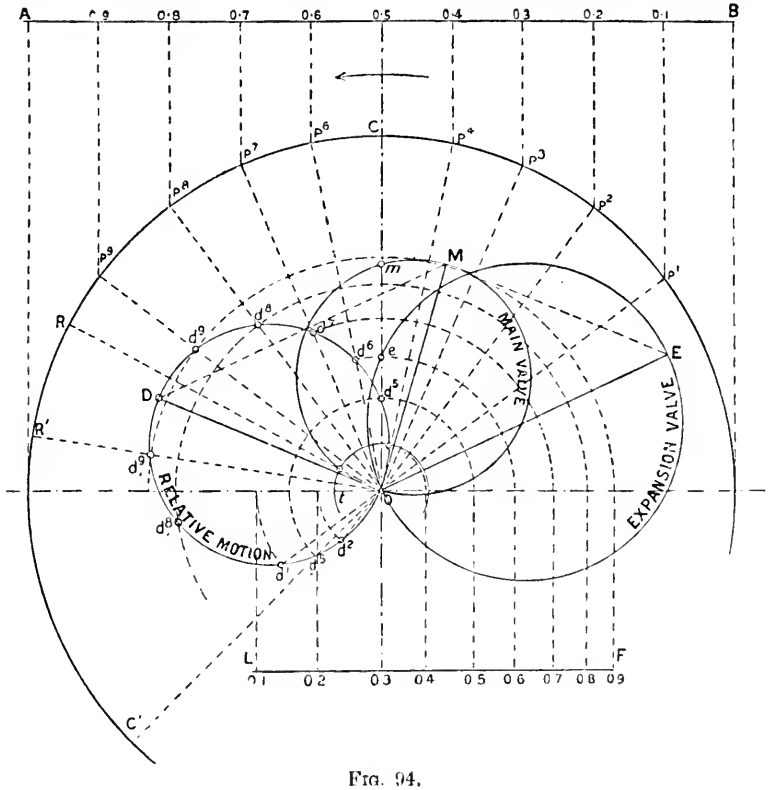

Fig. 94.

of the line representing the crank position which is intercepted by the relative-motion circle.

If the value of s becomes greater than OD, the expansion valve becomes useless, merely contracting the port in the main valve instead of closing it. To cut off at early points in the stroke, the value of s may become negative—that is, the expansion plates overlap the ports of the main valve when both valves are in mid-position. Thus od^1 is the negative value of s to cut off at crank-position OP^1, or at 0·1 of the stroke of the piston.

The various values of s are brought down on to one line, LF, and these distances may be used for graduating the scale by which the valve may be set for any desired point of cut-off.

Reuleaux Diagram for Meyer Valve Gear.—The action of the expansion valve may be easily followed from this diagram (Fig. 95).

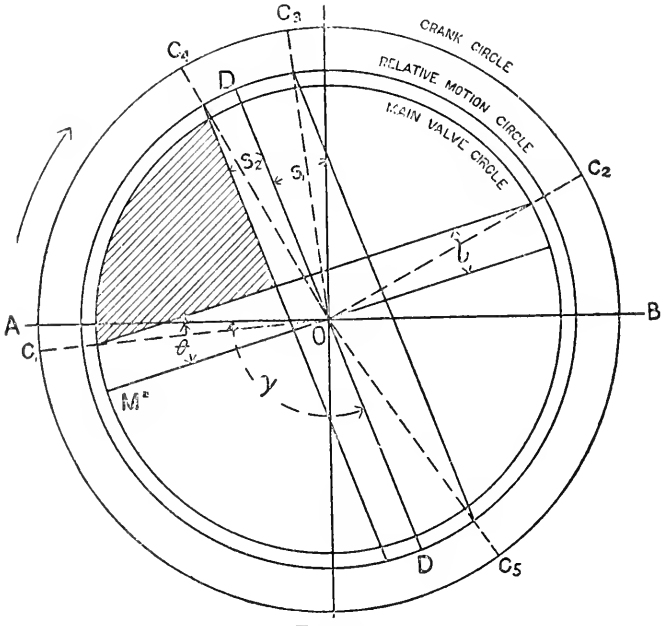

Fig. 95.

Thus, taking the same example as in Fig. 94, draw the main-valve circle with radius OM, equal to the eccentricity of the main-valve eccentric. Draw also the relative-motion circle with radius OD of the relative motion or virtual eccentric (obtained as explained in Fig. 92), and from the same centre the crank circle C_1C_2 to any convenient scale.

From AB make the angle AOM = θ = the angular advance of the main-valve eccentric, and in a direction opposite to the crank-pin

motion ; and draw DD, making an angle γ with AB, the angular advance of the relative-motion eccentric. From MO set off the lap line of main valve parallel to MO, and at a distance l from it. Then, with main valve, port opens at crank-position OC_1 and closes at OC_2. From DD measure a distance, S_1 corresponding with s in Fig. 90. Then OC_3 is the position of the crank at point of cut-off. If s be negative, that is, if the expansion plates overlap the ports in the main valve when both valves are in mid-position, set-off S_2 = lap of expansion plate. Then cut-off takes place earlier in the stroke, namely, when the crank is at OC_4.

The expansion valve, for position S_1 of the plate, re-opens the port in the main valve at C_5. It will be seen that C_5 falls behind C_2—that is, the main valve has closed the steam port before the expansion valve re-opens the valve port. If C_5 had fallen before C_2, the steam would be admitted to the cylinder twice during the stroke.

CHAPTER V.

THE INDICATOR.

THE indicator was originally invented by James Watt, and although improved in points of detail, the main features of the instrument as devised by him are substantially retained at the present time by makers of indicators.

The uses to which the indicator is chiefly applied are—

1. To obtain a diagram from which conclusions may be drawn as to the correctness or otherwise of the behaviour of the steam in the cylinder; the promptness of the steam admission; the loss by fall of pressure between the boiler and the cylinder; the loss by wiredrawing; the extent and character of the expansion; the efficiency of the arrangements for exhaust, including the extent of the back pressure; the amount of compression.

2. To find the mean effective pressure exerted by the steam upon the piston, with which to calculate the *indicated horse-power* of the engine.

3. To determine whether the valves are set correctly by taking diagrams from each end of the stroke, and observing and comparing the respective positions of the points of admission, cut-off, release, and compression.

4. To determine the condition of the steam as to dryness when the diagram is measured in connection with the known weight of steam supplied to the cylinder per stroke.

Description of the Indicator.—The instrument, of which there are several different types, consists essentially of a small steam-cylinder containing a piston, and spring to regulate the movement of the piston according to the pressure; a pencil carried by a system of light levers constituting a parallel motion, by which the pencil reproduces the vertical movement of the indicator piston, but magnified four, five, or six times; and a drum to which a paper or "card" is attached, and which receives a backward and forward rotation on its own axis by a motion derived by a reducing gear from the crosshead or other suitable portion of the engine.

By the combined vertical movement of the pencil and horizontal movement of the paper, a closed figure is drawn called the indicator diagram. The enclosed area represents the effective work done by the steam upon the piston; the upper portion of the diagram represents the varying pressure of the steam during the forward or impulse

stroke of the piston, and the lower portion that during the backward stroke.

The diagram traced by the indicator pencil differs more or less considerably from the theoretical (pv) diagrams already considered,

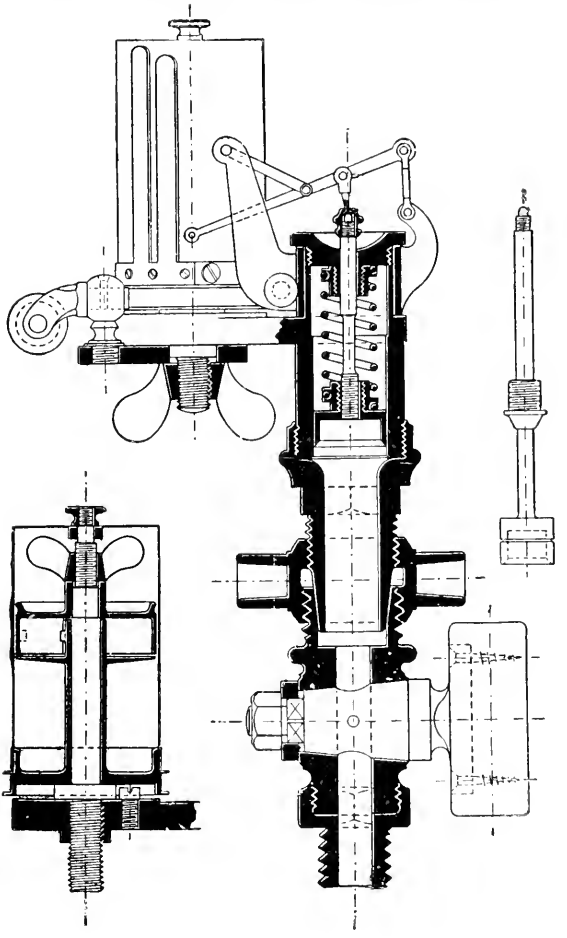

Fig. 96.

but the actual diagram is usually the more satisfactory, as it approaches the more closely to the form of the theoretical diagram.

Three indicators will be here described, as sufficient for our purpose, namely, the Thompson indicator, the Tabor indicator, and the outside-spring indicator by Messrs. Elliott Bros.

1. The *Thompson indicator* is illustrated in section in Fig. 96.

The indicator and tap here shown are screwed into a union connected immediately with the end of the cylinder.

The area of the indicator piston is one-half square inch. It is put into communication with the engine cylinder by opening the tap. The steam then lifts the piston, compressing the spring to an extent depending on the pressure.

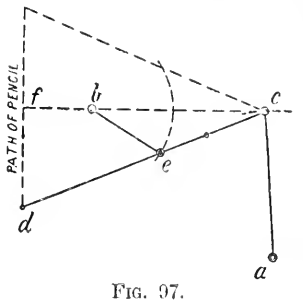

Fig. 97.

The piston has no packing, and makes an easy fit with the indicator barrel. The piston-rod is connected to the pencil lever by means of a ball joint and a small milled nut.

The upper side of the piston communicates with the atmosphere by means of small holes in the upper portion of cylinder.

The drum upon which the paper is fixed for receiving the diagram is carried by a disc which rotates on a vertical pin. The drum is pulled in one direction by a cord, attached through a reducing motion to the engine crosshead or some other suitable point, and it returns in the opposite direction by the tension of a spring coiled in the drum. The tension of this spring may be regulated by a fly-nut on the drum spindle. The drum is shown in section in Fig. 96.

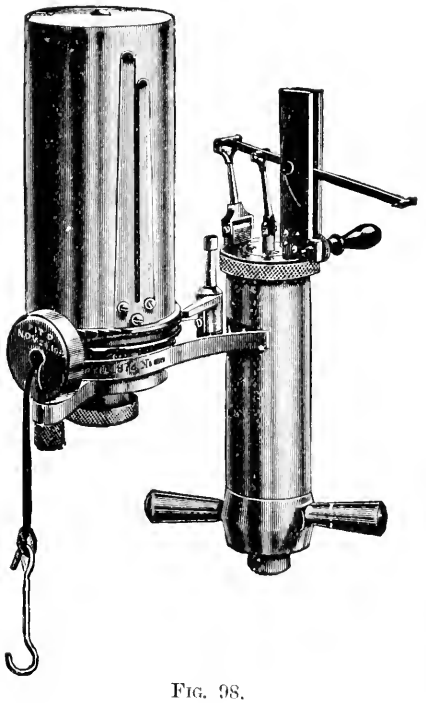

Fig. 98.

The object of most recent improvements in steam-engine indicators has been to reduce the weight of the parallel motion, so as to reduce the errors due to inertia which occur at high speeds with the heavier moving parts.

The parallel motion of the Thompson indicator is represented by Fig. 97.[1]

The points a and b are fixed. The link ac turns about a, and eb about b. The line described by the pencil d is practically straight within the limits of its motion.

To change the spring in the

[1] From a paper by Mr. C. F. Budenberg, M.Sc., on "Steam Engine Indicators."

Thompson indicator, unscrew the small milled nut by which the piston-rod is attached to the pencil lever. Then unscrew the cylinder cover, and remove the cover, spring and piston. Unscrew the spring from the cover, and lastly from the piston. Proceed in the reverse order to fix a new spring.

2. *The Tabor indicator* is illustrated in Figs. 98 and 99. The

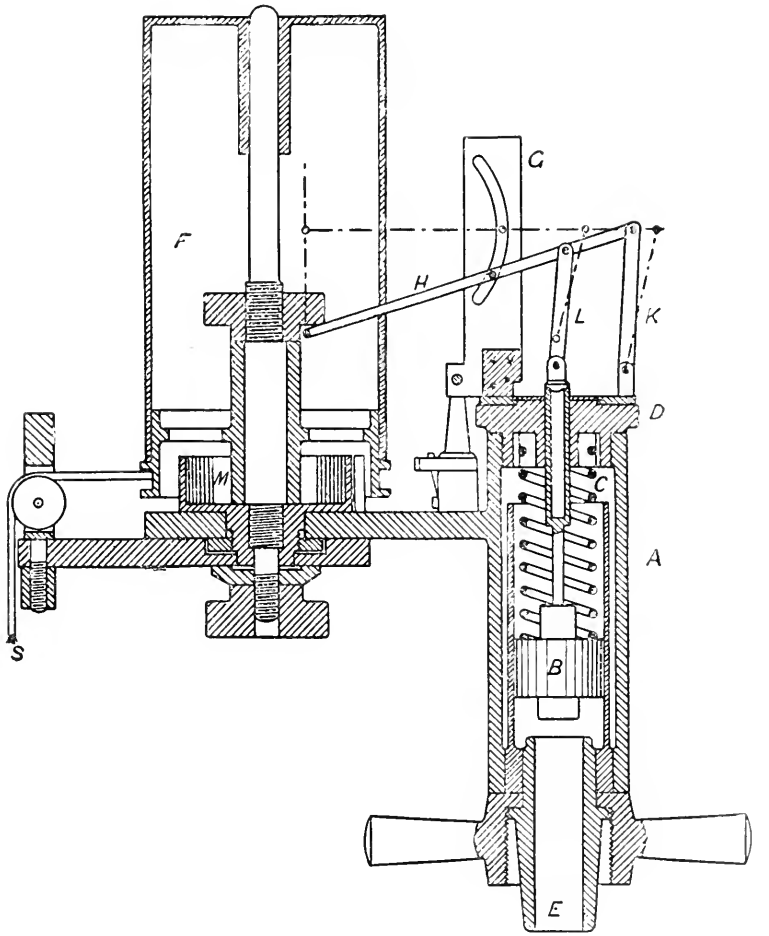

FIG. 99.

most noticeable feature of this indicator is the means employed to secure a straight-line movement of the pencil. A plate G containing a curved slot is fixed in an upright position, and a roller fixed to the

pencil lever H is fitted so as to roll freely in the slot. The curve of the slot is so formed that it exactly neutralizes the tendency which the pencil has of describing a circular arc, and the path of the pencil is a straight line. This arrangement reduces the weight of moving levers to a minimum, and this instrument is especially suitable for high speeds. The pencil movement consists of three pieces—the pencil bar H, the back link K, and the piston-rod link L. The two links are parallel to each other in every position. The lower pivots of these links and the pencil-point are always in the same straight line. If an imaginary link, parallel with the pencil bar, be supposed drawn from the bottom centre of one link to the other link, the combination would form a pantagraph. The slot and roller serve the same purpose, but to better advantage.

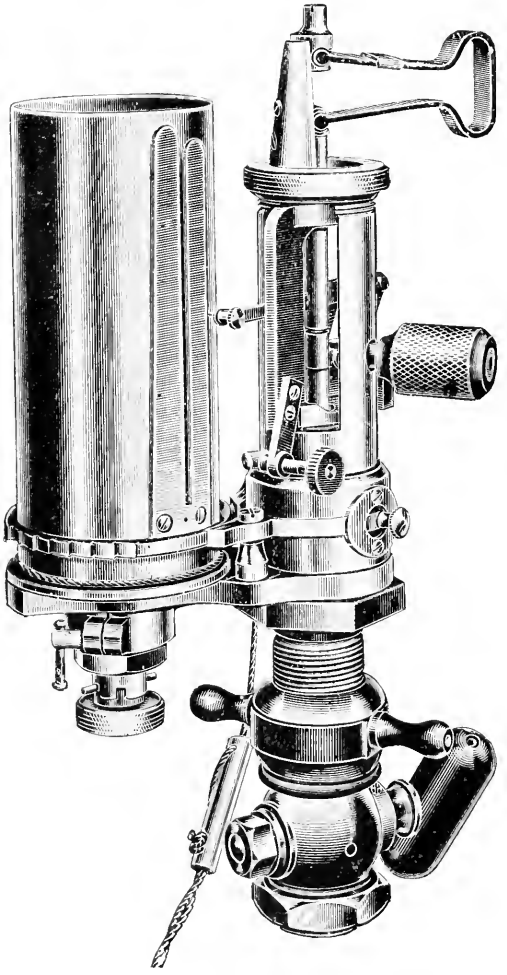

Fig. 100.

The pencil mechanism multiplies the piston motion five times. To change the spring of the Tabor indicator, remove the cover and loosen the screw beneath the piston, which liberates the piston from the piston-rod. Then unscrew the piston from the spring, and the spring from the cover. Proceed in the reverse order to fix another spring.

Selection of Spring for Indicator.—Springs are made of various strengths to suit the pressure of steam employed in the engine to be indicated, weak springs being required for low pressures, and strong springs for high pressures. The strength of the spring is marked upon it; thus a $\frac{1}{12}$

spring gives a reading of 1 lb. per square inch pressure for every $\frac{1}{12}$ in. vertical movement of the indicator pencil.

The strength of the spring chosen depends upon the height of diagram required, which might be $2\frac{1}{2}$ to 3 in. for slow speeds to not more than half that height for high speeds. At 100 lbs. pressure in the steam-chest, and no loss by throttling, a $\frac{1}{50}$ spring would give a diagram 2 in. above the atmospheric line, a $\frac{1}{64}$ spring about $1\frac{1}{2}$ in., and so on. In measuring the diagram to find the mean pressure, care must be taken that the scale used is the same as that of the spring in the indicator.

3. The construction of the outside-spring indicator, by Messrs. Elliott Bros., will be understood from the diagrams (Figs. 100, 101). It possesses the advantage of having a spring which is not exposed to high temperature, and which is therefore especially suitable for indicating engines using superheated steam, or engines using steam of high pressures and temperatures.

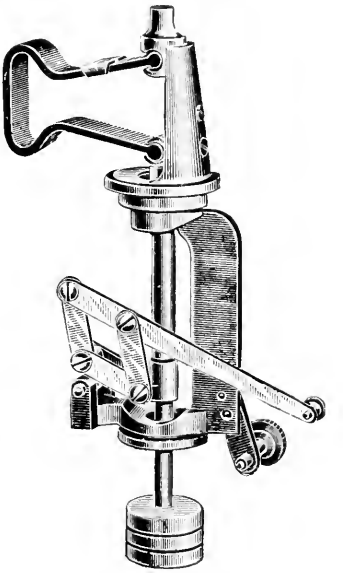

Fig. 101.

Attachment of the Indicator.—A hole is drilled at each end of the cylinder, and tapped to receive a half-inch steam-pipe, to which to connect the indicator-cock. Care must be taken, in fixing the position of the hole, that it is in no danger of its being covered by the piston of the engine at the end of the stroke. The pipe connecting the indicator should be as short and direct as possible, and be well lagged. Long pipes and sharp bends may greatly interfere with accuracy of results.

Reducing Motions.—The motion of the indicator drum must be an exact reproduction of the motion of the piston, or crosshead, on a reduced scale. The length of the indicator diagram is usually from 3 to 4 in., or longer for slow-speed engines; at high speeds the length is reduced. The movement of the drum is obtained by some arrangement for reducing the motion of the crosshead in the following ratio, namely—

(length of diagram required) ÷ (length of stroke of engine)

The method of obtaining the movement required differs according to the design of the engine to be indicated. The cord used for attaching the drum to the moving part of the engine should be as short as possible, and the cord itself well stretched before being used for such a purpose.

Fig. 102 shows a method of fitting up an indicator gear for a small vertical engine, as used by the author for experimental purposes. Figs. 103–107 show other methods, as applied to horizontal engines. The points requiring special attention are—

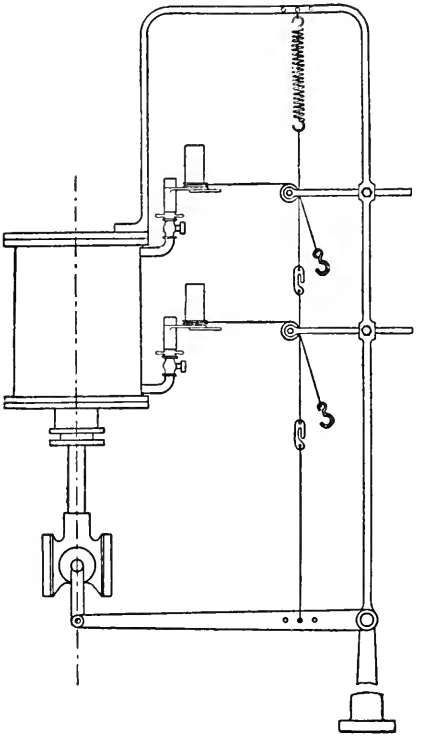

Fig. 102.

(1) The point from which the motion of the cord is taken must be a correct reproduction of the motion of the crosshead to a reduced scale.

For this purpose it is necessary that the ratio AB : AC should be constant for all positions of the crosshead (see Figs. 103, 105, and 106), where C represents a pin moved by the crosshead of the engine, and B the pin to which the indicator string is attached. The cord is carried away from the pin B parallel to the centre line of the engine; but when the cord is taken off the circumference of a portion of a disc, as shown in Fig. 104, the cord may be carried away to the indicator in any direction, because the

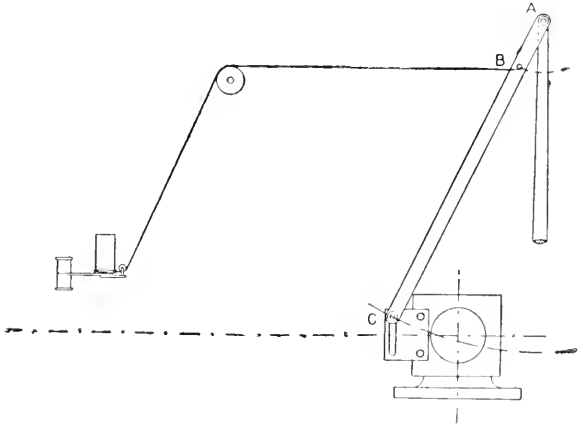

Fig. 103.

travel of any point in the cord throughout its length is the same for all directions of the cord.

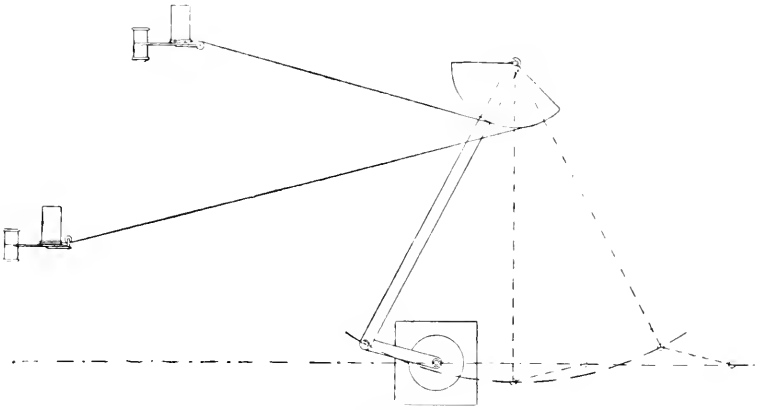

Fig. 104.

Fig. 107 is a pantagraph, the point A being connected to the crosshead, while the point C is a fixed centre. The cord is attached to E, so placed that E is in the straight line joining A to C.

(2) The cord must in all cases (except when attached to the circumference of a disc) be led away from the driving-point in a line parallel

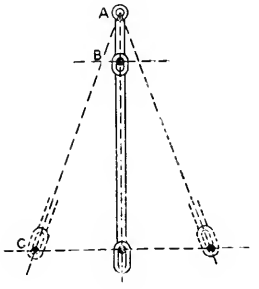

Fig. 105.

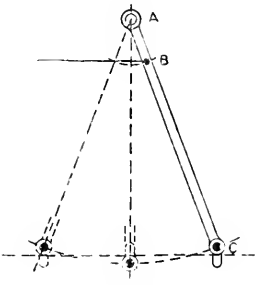

Fig. 106.

to the line of motion of the piston to a leading-off pulley, after which it may be taken at any angle, in the same plane, to the indicator drum; the important point being that the motion of the cord at the drum is the same as its motion at the driving-point.

Sometimes a reducing motion is fixed to the indicator direct, and consisting of two pulleys whose diameters are in the same ratio as (length of diagram required) : (length of stroke of engine). Then a cord led from the large pulley to the engine crosshead by a suitable

guide pulley, and another cord from the small pulley to the indicator drum, give the motion of the drum required without any levers.

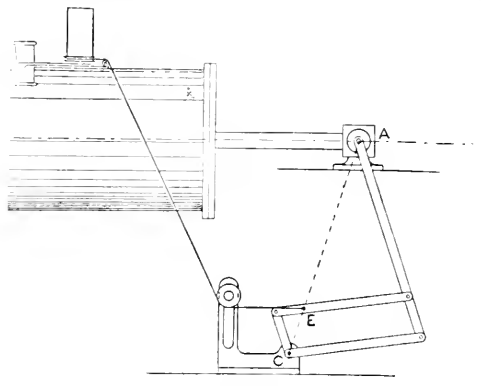

Fig. 107.

Method of taking Indicator Diagrams.—

1. Lubricate the indicator piston.

2. Before attaching the indicator, blow through the pipes to see that they are clear.

3. Adjust the drum-cord so that the drum rotates freely without knocking at either end of its stroke.

4. Place the cord on the drum, and attach the cord to the driving-point.

5. Warm up the indicator by admitting steam for a few seconds.

6. When the steam is shut off, bring the pencil round till it touches the card gently, and draw a firm line. Adjust the stop-screw so that the pressure on the pencil cannot afterwards be excessive.

The line drawn while the steam-cock is shut is called the "atmospheric line."

7. Open the steam-cock, apply the pencil to the card, and draw a diagram. Allow the pencil to remain against the card till several diagrams are traced one upon another.

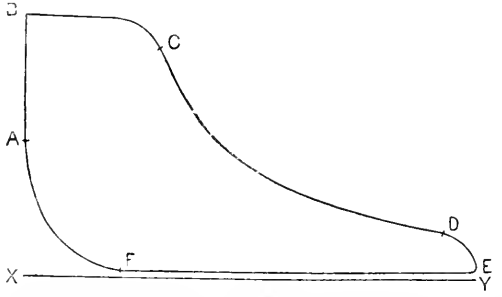

Fig. 108.—XY = atmospheric line; AB = admission line; BC = steam line; CD = expansion line; DE = exhaust line; EF = back-pressure line; FA = compression line; A = point of admission; C = point of cut-off; D = point of release; F = point of compression.

8. Remove the card and mark on it the following particulars :—

Name of engine	... ...
Date	... ...
No. of diagram	... ...
Scale of spring	... ...

Cylinder diameter	
,, stroke	
Which end	
Diameter of piston-rod	
Revolutions per minute	
Boiler pressure	
Vacuum	
Barometer	
Initials	

The Indicator Diagram.—Fig. 108 is an example of a common form of diagram from a single cylinder non-condensing engine running under good working conditions :—

The *admission line*, AB (Fig. 108), shows the rise of pressure of the steam as it enters the cylinder. The character of this line varies with the lead of the valve : thus in Fig. 109, the effect of too early opening of the port to steam is shown by the dotted line *m*; too late action is shown at *n*, Fig. 110.

The *steam line*, BC (Fig. 108), shows how nearly the steam pressure in the cylinder reaches that of the boiler. For this purpose it is usual to draw the boiler-pressure line over the steam line as shown in Fig. 114. There is always a certain fall of pressure between the boiler and the cylinder in consequence of throttling of the steam

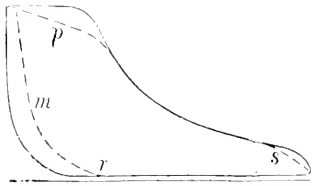

FIG. 109.—*m* = excess of lead; *p* = wiredrawing; *s* = early release; *r* = early compression.

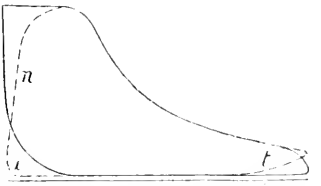

FIG. 110.—*n* = insufficient lead; *t* = late exhaust; *x* = late compression.

in the ports and passages, and especially at high speeds, when working linked up, also with very long steam-pipes, or with steam-pipes too small in diameter or having sharp bends.

Again, during the flow of steam into the cylinder there is often a further gradual fall of pressure, as shown by dotted line *p* (Fig. 109), due to the increased demand for steam as the piston advances, causing a sudden large displacement. This effect, namely, the gradual fall of pressure during admission, is known as "wiredrawing."

The effect on the *steam line* of regulating the engine by a throttle valve, and thus varying the opening for the supply of steam, is shown by Fig. 111, which was obtained by successively removing portions of the load on the engine and maintaining the speed constant by partially closing the steam-supply valve.

The forward-pressure line A for a heavy load fell to B for a medium load, and to C for a light load, the points of cut-off, release, and compression remaining constant.

The *point of cut-off*, C (Fig. 108), is more or less sharp and definite

with trip-valve gears, which cut off suddenly by the action of a strong spring; but with the slide-valve the cut-off is more gradual, the corner is rounder, and the *exact* point of cut-off is more difficult to locate. In such a case the point of cut-off may be taken at the point where the concave curve of the expansion line meets the convex curve of the cut-off corner.

The effect on the diagram of varying the point of cut-off is shown

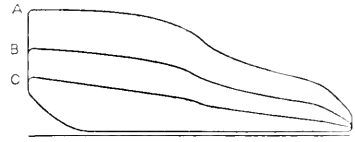

FIG. 111.

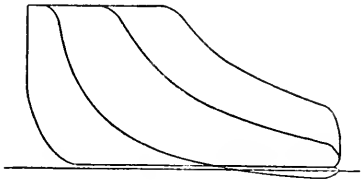

FIG. 112.

in Fig. 112 for non-condensing engines, and in Fig. 113 for condensing engines with a trip-valve gear, the cut-off being fairly sharp.

Fig. 114 shows the effect of regulating the cut-off with a slide-valve high-speed engine. Here the cut-off point is much less definite than with a trip gear (Fig. 113).

In the non-condensing diagrams (Fig. 112) with an early cut-off, it is seen that the expansion line falls below the atmospheric line, and forms a loop at the end of the diagram; this is due to the pressure of steam during expansion falling below atmospheric pressure, and hence, when the exhaust port opens, the pressure will rise instead

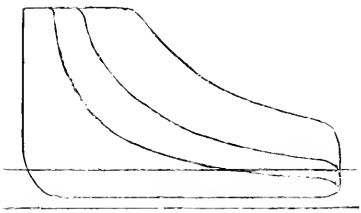

FIG. 113.

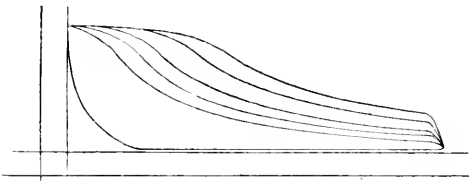

FIG. 114.

of fall to the back-pressure line. This is a most wasteful form of diagram. In condensing engines with a good vacuum, a loop is not formed even with a very early cut-off (Fig. 113).

Where it is necessary to work regularly with a very early cut-off, the conditions are uneconomical, and the engines are too large for their work.

The expansion curves of indicator diagrams vary considerably, and they do not obey any very definite law. They are, in fact, the resultant effect of a variety of separate causes, operating to a different extent in different engines, and even in the same engine by change of conditions. These causes include: increase of volume of the steam after cut-off; condensation by work done and by loss of

heat to the internal cylinder surface; re-evaporation of water present in the cylinder during expansion.

It is, however, frequently helpful to apply to the expansion line of a diagram an approximate standard, and for this purpose the *hyperbolic* curve is used, and, without expecting the diagram necessarily to follow that curve, useful information may sometimes be obtained by its aid, especially as to the probable extent of re-evaporation in the cylinder. The method of applying this curve to the diagram is explained on p. 109.

The *release point*, D (Fig. 108), occurs just before the end of the stroke. The higher the rate of revolution of the engine the earlier the exhaust, the trouble with high-speed engines being not so much how to get the steam *into* the cylinder as how to get it *out*.

The *exhaust line*, DE (Fig. 108), represents the fall of pressure which takes place when the exhaust port is opened. Fig. 109, p. 99, shows, by dotted line, early opening to exhaust at *s*, and Fig. 110 late exhaust at *t*.

The *back-pressure line*, EF (Fig. 108), shows the pressure against the piston during its return stroke, the amount of the pressure being measured from the back-pressure line down to the zero line of pressure. In non-condensing engines, the back pressure coincides the more nearly with the pressure of the atmosphere as the exhaust passages permit of a free exit for the steam. In good non-condensing engines the back pressure is about 1 lb. above the atmosphere, and in condensing engines about 3 lbs. above zero.

The *compression curve*, FA (Fig. 108), commences from the point of exhaust closure at F. The point of closure depends upon the amount of inside lap on the valve, and the angular advance of the eccentric, and the nature of the curve formed will depend upon the pressure of the steam trapped, as well as upon the volume of the clearance space. A valve having an amount of inside lap suitable for a condensing engine when the pressure of the steam at beginning of compression is only, say, 3 lbs. absolute, will probably show an excessive amount of compression when the same engine is used non-condensing, and compressing steam at 16 lbs. absolute pressure.

The shape of the compression corner of the diagram is, however, the resultant effect of several causes, including the compression of the steam enclosed; compression of air trapped with the steam, especially in non-condensing engines; leakage of steam into and out of the cylinder during compression; and the early admission of steam before the piston has yet reached the end of its backward stroke, especially with a link motion linked up towards mid-position.

Clearance.—This is the space enclosed between the piston and the face of the slide-valve when the piston is at the end of its stroke, and includes the space between the piston and cylinder cover, the volume of the steam-port up to the face of the slide-valve, and the volume of any other pipes or passages opening into the cylinder requiring to be filled with steam each stroke, such as auxiliary

starting valve pipes, relief cock, and indicator connections. The clearance volume is relatively greater in small engines than in large, and varies from 3 to 10 per cent. of the piston displacement. With piston valves the clearance volume may reach 25 or 30 per cent. The clearance space, though generally a source of loss when considered in connection with steam consumption, is necessary for practical reasons —first, to avoid danger to the cylinder covers by allowing space for the small amount of water which is invariably present to a greater or less extent in engine cylinders ; and also to provide passages sufficiently large for the ready ingress and egress of the steam. Since the clearance volume depends upon the area of the piston, and not upon the length of stroke, it follows that in the short-stroke cylinder of large diameter the clearance volume is necessarily a large proportion of the piston displacement.

The *clearance line*, OP (Fig. 115). Before this line can be drawn, the volume of the clearance space must be obtained by calculation from the drawings of the cylinder, or by measurement. Then, if vertical lines be drawn touching the ends of the indicator diagram, the distance between them represents the piston displacement. The clearance line must then be set back from the line through AB, so that its distance OB from the end of the diagram is to the whole length of the diagram BC, as the volume of the clearance is to the volume of the piston displacement.

The *zero line of pressure*, or line of perfect vacuum, is drawn 14·7 lbs. below the atmospheric line, or, more correctly, by the reading of the

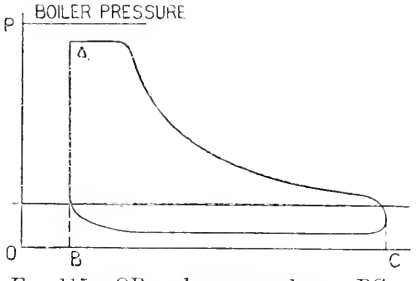

Fig. 115.—OB = clearance volume ; BC = piston displacement.

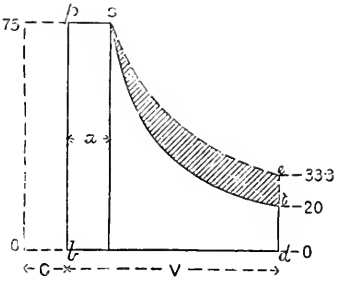

Fig. 116.

atmospheric pressure from the barometer, which is set down from the atmospheric line to the same scale of pounds as the spring used in drawing the diagram.

Effects of Clearance.—1. Effect of clearance on the ratio of expansion :—

In Fig. 116, let V = piston displacement ; c = clearance volume ; a = piston displacement at cut-off ; R = nominal expansion ; R_1 = actual expansion.

Assuming hyperbolic expansion—

$$\text{Then } R = \frac{\text{final volume}}{\text{volume at cut-off}} = \frac{V}{a}$$

$$R_1 = \frac{V + c}{a + c}$$

EXAMPLE.—Let V = 5 cub. ft. ; $c = a = 1$ cub. ft. ; initial pressure = 100 lbs. absolute.

Then cut-off takes place at $\frac{1}{5}$ of the stroke, and, neglecting the effect of clearance volume, the nominal number of expansions R = 5.

But when the clearance volume is added, then the actual number of expansions—

$$R_1 = \frac{\text{final volume}}{\text{volume at cut-off}} = \frac{V + c}{a + c} = \frac{6}{2} = 3$$

Or the actual ratio of expansion is $\frac{1}{3}$ instead of $\frac{1}{5}$.

$$\left.\begin{matrix}\text{The terminal pressure}\\ \text{neglecting clearance}\end{matrix}\right\} = 100 \times \frac{\text{initial volume}}{\text{final volume}} = 100\frac{a}{V} = 20$$

$$\left.\begin{matrix}\text{The terminal pressure}\\ \text{including clearance}\end{matrix}\right\} = 100 \times \frac{c + a}{V + c} = 33\tfrac{1}{3}$$

Clearance steam does no work on the piston during admission ; but after cut-off its effect is to raise the pressure during expansion, or to permit a larger expansion for a given terminal pressure, and thus to increase the area of the expansion portion of the work diagram.

2. Effect of clearance on steam consumption when the steam is admitted to the cylinder through the whole length of stroke, and with no compression of exhaust.

Here evidently the clearance volume is filled each stroke by steam that does no work on the piston, and the steam so used is all wasted at the exhaust.

3. Effect of clearance on work done per unit volume or weight of steam with expansion.

(*a*) Taking first the case (Fig. 117) where clearance volume = 0 and compression = 0 : To find the work done per unit weight of steam, which is here taken as the weight of 1 cub. in. of steam at 75 lbs. absolute pressure, expanded down to back pressure of 15 lbs. absolute.

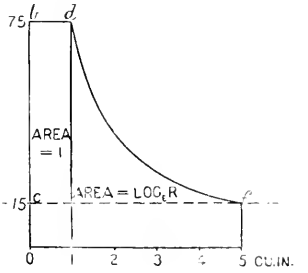

FIG. 117.

$$\text{Mean pressure} = \frac{\text{area}}{\text{length}} = \frac{75(1 + \log_e r)}{5} = \frac{75(1 + 1{\cdot}61)}{5} = 39{\cdot}15$$

or mean effective pressure = 39·15 − 15 = 24·15 lbs.

Work done per unit of steam admitted = 24·15 × 5 = 120·75 inch-lbs.

(*b*) Taking, secondly, clearance volume = 0·5 cub. in. and compression = 0 (Fig. 118).

Here for the same terminal pressure the piston displacement may

be increased to 7 cub. in., the number of expansions being five in each case.

$$r = \frac{\text{final volume}}{\text{original volume}} = \frac{7{\cdot}5}{1{\cdot}5} = 5$$

$$\text{Mean pressure during stroke} = \frac{\text{area}}{\text{length}} = \frac{75 + (75 \times 1{\cdot}5)\log_e r}{7} = 36{\cdot}59$$

$$\text{or effective pressure} = 36{\cdot}59 - 15 = 21{\cdot}59$$

$$\text{Work done per cubic inch of steam admitted} = 21{\cdot}59 \times 7 \div 1{\cdot}5 = 100{\cdot}75 \text{ inch-lbs.}$$

This result, namely, 101·75 units of work per cubic inch of steam admitted, compared with 120·75, which is the amount of work done per unit of steam with no clearance space in the cylinder, shows a loss due to clearance space in this example of 16·5 per cent. in work units per unit of steam. Both these cases are without compression.

(*c*) Taking the same data as before, but with compression during

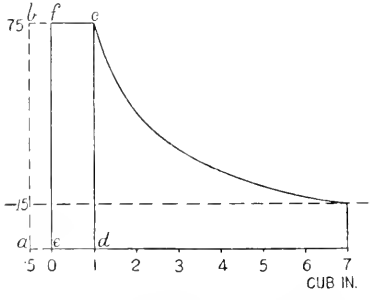

FIG. 118.—Area *efed* = 1; area *abcd* = 1·5.

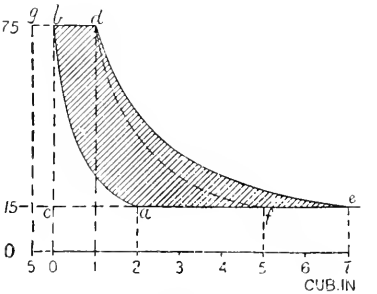

FIG. 119.

the backward stroke from atmospheric pressure up to initial pressure (see Fig. 119).

Considering the case numerically, it has been shown, case (*a*), that the figure *cbdf* without clearance (Fig. 119) is equivalent to a work area of $24{\cdot}15 \times 5 = 120{\cdot}75$ units; also, by case (*b*), that the figure *cbde* with clearance is equivalent to a work area of $21{\cdot}59 \times 7 = 151{\cdot}13$ units, or a difference equal to the area *fde* of 30·38 units.

But the area of the figure *oba*2 = ($\log_e r = \log_e 5 = 1{\cdot}61$) times the area of the clearance volume rectangle $og = 1{\cdot}61 \times 75 \times 0{\cdot}5 = 60{\cdot}375$.

$$\text{The mean pressure} = \frac{\text{area } oba2}{\text{length } o2} = \frac{60{\cdot}375}{2} = 30{\cdot}1875$$

Deducting pressure of atmosphere, $30{\cdot}1875 - 15 = 15{\cdot}1875$

$$\text{Work units performed during formation of compression corner } abc = 15{\cdot}1875 \times 2 = 30{\cdot}375$$

That is, the negative work area of compression *abc* is equal to the positive work area *fde* due to increased expansion.

Therefore the work area *cbdf* without clearance is equal to the

work area *abde* with clearance, and each of these areas has been formed with the same weight of steam. Hence there is no loss by clearance when compression is carried to initial pressure, and when expansion is carried down to back pressure.

In practice the two latter conditions are rarely fulfilled, and there is, therefore, usually a considerable loss by clearance, especially when the clearance volume is proportionally large, as in short-stroke high-speed engines.

The compression of the steam towards the end of the exhaust stroke is of more importance from the point of view of smooth running and the prevention of shocks than of steam economy; and the higher the speed the more necessary is it to have a good compression corner to the diagram.

The Stephenson link motion fulfils this condition very efficiently by providing an increasingly early closure to exhaust, and an increasing lead when linking up takes place at high speed, the combined effect of which is to give a large compression corner, shown in Fig. 87, and thereby to improve the smoothness of running of the engine.

Limit of Useful Expansion.—In addition to the limit which cylinder condensation and excessive variation of stress upon the piston may

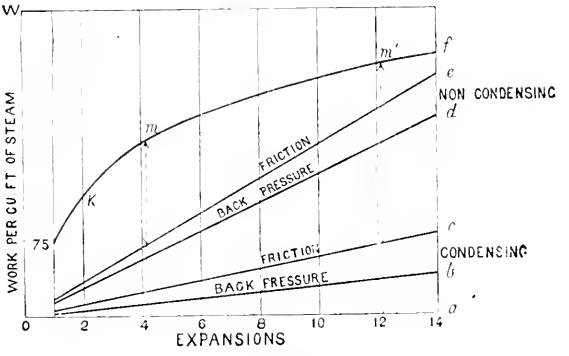

FIG. 120.

place upon the number of expansions permissible in a single cylinder, there is a further reason for limiting the number of expansions, namely, the work to be done by the engine in overcoming back pressure and friction; and this applies to both simple and compound engines of all classes.

The proportional loss due to work done against the back pressure of the atmosphere increases directly as the expansions increase, while the gain due to increased expansion is a gradually decreasing one. A limit is therefore eventually reached, beyond which further expansion would involve a loss. This is well illustrated by the following (Fig. 120), which is a modification of a diagram by Willans.

From the point O a vertical line, OW, is drawn representing work done in foot-pounds, and Oa is a line of volumes in cubic feet.

On the vertical line through O a scale is set off of work done per cubic foot of steam at any required pressure (= PV). Then, assuming hyperbolic expansion, the work done by expansion from 1 to 2, 3, 4, etc., cub. ft. is set up to scale on the vertical lines from the respective points 2, 3, etc., on the line Oa.

Thus at 2 cub. ft. the height of the vertical 2K for any pressure, as 75 lbs., = $PV(1 + \log_\epsilon 2)$; at 3 cub. ft. = $PV(1 + \log_\epsilon 3)$, etc. These vertical lines represent to scale the total work done by the steam during admission and expansion, 2, 3, 4, etc., times.

But these totals will be reduced by the work done against back pressure. For non-condensing engines, taking 16 lbs. per square inch absolute to represent back pressure due to the atmosphere, and 2 lbs. per square inch of piston to overcome the friction of the engine, then from 1 set up PV due to back pressure = (18 × 1); from 2 set up (18 × 2), and so on. Then the height of the vertical from Oa to meet the oblique line through e represents the work done against back pressure and friction for non-condensing engines. Similarly, an oblique line through c is drawn for condensing engines, allowing 6 lbs. absolute for work done against back pressure and in overcoming friction.

Then the vertical ordinates measured at each ratio of expansion, from the friction line to the curves, give the theoretical net effective work for the initial steam pressure taken.

The most effective number of expansions is where this ordinate is a maximum. A dotted line (m) is drawn representing the number of expansions, beyond which it does not pay to go. The limiting ratio of expansion for non-condensing engines was given by Willans as (absolute initial pressure) ÷ 25. For condensing engines, it will be seen from the figure that the limiting ratio (m') is much higher, and in practice the number of expansions = (absolute initial pressure) ÷ 14 approximately.

Indicated Horse-power (I.H.P.).—The formula is given on p. 2. It is convenient to use a *constant* for each engine = L × A ÷ 33,000, where L = length of stroke in feet, and A = effective area of piston in square inches.

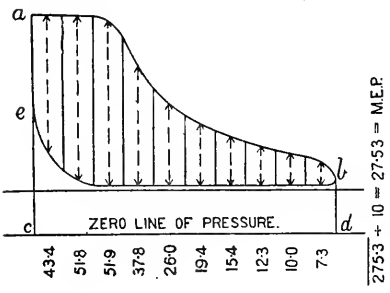

FIG. 121.

Then—

$$P \times N \times \text{constant} = \text{I.H.P.}$$

where P = mean effective pressure, and N = number of impulses per minute.

The *mean effective pressure*, as obtained from an actual indicator diagram, is the mean width of the figure measured by the scale of the indicator spring with which the diagram was taken (Fig. 121).

The *mean forward pressure* is the mean height of the irregular figure *cabd* from the zero line of pressure.

The *mean back pressure* is the mean height of the irregular figure *cebd* from the zero line of pressure. The difference between the mean heights of these two figures = the mean effective pressure.

Measurement of Mean Pressure.—For this purpose two methods may be adopted—first, the method of ordinates; or, second, the use of the planimeter. The method of ordinates is as follows: Draw two lines at right angles to the atmospheric line, touching the diagram at its extreme ends, and divide the space between them into 10 equal parts (or, when great accuracy is required, into 20 equal parts).

In order now to find the mean width of the diagram, measure the width in the centre of each space by the scale corresponding to the spring of the indicator, add the results together, and divide by the number of measurements; the result will be the mean effective pressure.

The *planimeter* is an instrument by means of which the mean pressure may be obtained from the diagram more rapidly than

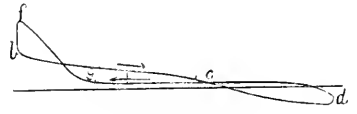

Fig. 122.

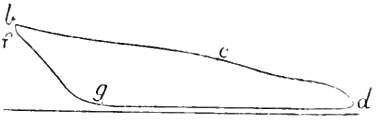

Fig. 123.

by measurement. There are various kinds of planimeters, as the Amsler planimeter, the Coffin averaging instrument, the Hatchet planimeter, and others. The operation with the Amsler planimeter consists of tracing the outline of the diagram with a pointer of the instrument, when the mean pressure of the diagram may be read from the graduations of a small roller, the movement of which depends upon the path of the tracer as it passes over the outline of the diagram.

When a diagram has loops, as shown in Fig. 122, the loops represent negative work, and show that the engine is under-loaded. The

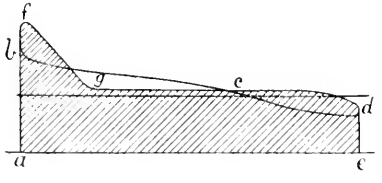

Fig. 124.

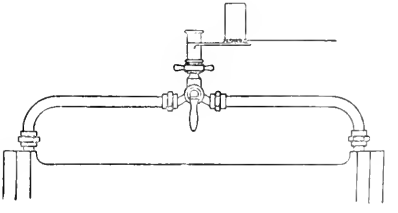

Fig. 125.

loops would disappear if the load were increased. The forward line *bcd* would then rise as in Fig. 123, while the back-pressure line *fgd*

remains as before. Or, by exhausting into a condenser, the back-pressure line may be lowered, while the forward-pressure line remains. In all cases of diagrams with loops, it is advisable to draw the zero line of pressure, and estimate by the usual method of ordinates, the mean pressure of the whole forward-pressure diagram, *abcde* (Fig. 124), and afterwards of the back-pressure diagram, *abfgde*, shown cross-lined. The difference will be the resultant mean effective pressure.

To find the power of an engine, diagrams must of course be taken from each end of the cylinder. When one indicator is connected

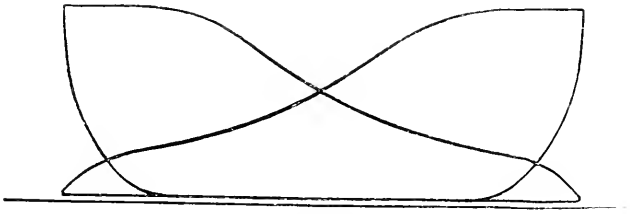

FIG. 126.

with the two ends of the cylinder by pipes and a three-way cock, as shown in Fig. 125, the two diagrams may both be taken on one card, as Fig. 126. This system (Fig. 125) is not to be recommended except for small engines. The mean pressure of such diagrams is taken by measurement separately, and their sum is divided by 2 to obtain the mean pressure.

To find the mean value of the area A of the piston, when the steam acts on a full face, a_1, of the piston on one side, and when on the other side the amount of this area is reduced by the area a_2 of the piston-rod—

$$\text{Then mean area } A = \{a_1 + (a_1 - a_2)\} \div 2$$

For compound or multicylinder engines, the power of each cylinder separately is obtained, as already explained, and the sum of these is the total indicated horse-power.

Mean Power at Variable Speeds.—Where the revolutions are variable during the period of trial, indicator diagrams should be taken more frequently, and to ensure accuracy where the speed varies considerably, and especially when the mean pressures at the two ends of the cylinder vary also, it is more satisfactory to keep the diagrams from the two ends of the cylinder separate; to obtain a piston constant for such end separately; to find the I.H.P. for *each* diagram as it is taken; to take the diagrams at equal intervals; and, finally, to find the mean of all the diagrams from the respective ends of the cylinder. Then the sum of the means from each end of the cylinder is the total I.H.P.

To draw a Hyperbolic Curve upon an Indicator Diagram.—The point from which the curve is drawn may be at *a* just before the

exhaust port opens, or at *b* just after cut-off. At *a* the weight of steam present in the cylinder as steam is usually a maximum, owing to the effect of re-evaporation. It will not represent the *whole* weight of steam passing through the cylinder, because even here there is probably a certain percentage of water not yet re-evaporated, and a certain amount of leakage past the piston and valve to exhaust. The space between the diagram and the curve will show approximately the loss of area due to the previous condensation of the steam now reappearing in the later part of the diagram.

Set off first the clearance line at O, and draw the zero line of pressure O*v* by scale of indicator spring. Then, to draw the curve touching point *a* (Fig. 127), draw a horizontal and vertical line

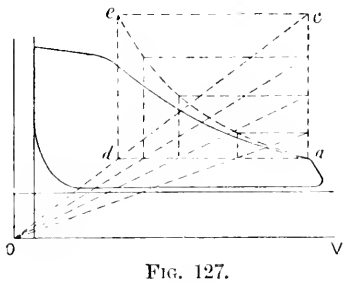

Fig. 127.

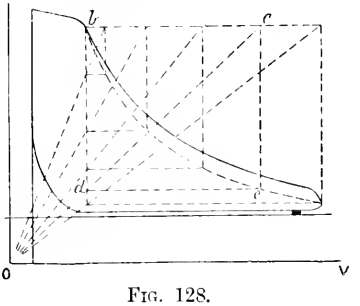

Fig. 128.

through *a*, and make *ac* any convenient height. Join O*c*, and from *c* draw a horizontal, *ce*. Where O*c* cuts the horizontal line through *a* raise a perpendicular, *de*. Then *e* is a point in the hyperbolic curve. Any number of further points in the required curve may be obtained by drawing lines from O as shown, and by drawing horizontals and verticals from the intersections of the lines through O with *ac* and *ad* respectively. The curve is drawn through the points of intersection.

The construction of the curve through *b* (Fig. 128) will be understood from the figure, the points in the dotted hyperbolic curve being obtained by drawing any oblique line, O*c*, to a point *c* on the horizontal through *b*. Then, where the oblique line O*c* cuts the vertical through *b*, namely, at *d*, draw a horizontal line, *de*, to cut a vertical through *c*: then point *e* is a point on the hyperbolic curve.

CHAPTER VI.

QUALITY OF THE STEAM IN THE CYLINDER.

In all ordinary types of steam-engines, the steam in the cylinder at the point of cut-off is less than that actually admitted to the cylinder per stroke, the remainder being present in the cylinder as water, or having passed away to exhaust by leakage at the slide-valve or piston.

The amount of the loss from these two causes combined varies from 20 to 50 per cent. of the total weight of steam supplied per stroke. The causes of the presence of water in the cylinder may be stated in detail as follows :—

1. Wetness of the steam originally supplied by the boiler.
2. Wetness due to condensation in long ranges of steam-pipes and in the valve chests, especially when these parts are not well covered with non-conducting material.
3. "Initial condensation" of the steam on entering the working barrel of the cylinder.
4. Condensation due to work done by the steam during expansion in the cylinder after cut-off.
5. Condensation due to external radiation and conduction from the cylinder walls.

1. **Wetness of Steam supplied by the Boiler.**—When steam carries over with it from the boiler to the engines *water* which has not been evaporated, but which passes away mixed with the steam, the phenomenon is known as *priming*.

The conditions which determine, to a greater or less extent, the quality of the steam supplied from a boiler as to dryness are : (*a*) the rate at which the steam is generated—whether by natural draught or accelerated draught; the greater the rate the greater the tendency to wetness. (*b*) The area of the water surface at the water-level of the boiler per pound of steam generated per minute ; the smaller the surface area for a given weight of steam delivered, the greater the disturbance of the surface, and the more probability of the steam being wet—hence the steam is usually dryer from a Lancashire boiler than from a vertical-type boiler. (*c*) The volume of the steam space; within certain limits, the smaller the volume the greater the tendency to wetness ; hence one means of reducing the amount of priming in boilers is to work with the water-level low in the gauge-glass. (*d*) The size of the boiler compared with the weight of steam required

per stroke by the engine; thus a large slow-running engine, if supplied with steam from a relatively small boiler, causes a fluctuation of pressure in the boiler at each stroke of the engine, which induces surface agitation of the water as the pressure varies, and tends to increase the wetness of the steam. This effect may be remedied by throttling down the steam-supply at the stop-valve, so as to reduce the extent of the fluctuation of the pressure in the boiler.

2. **Wetness due to Condensation in Steam-pipes and Valve Chest.**—The loss of heat from uncovered steam-pipes is considerable, and varies directly as the difference of temperature of the steam and the external air, and inversely as the thickness of the pipe.

The loss from iron steam-pipes uncovered, per degree difference of temperature between steam and external air, is approximately 2·4 thermal units per hour per square foot of external surface of pipe. By covering the pipe with woollen felt $\frac{1}{2}$ inch thick, this loss is reduced to 0·7 thermal unit per hour per square foot of external surface of metal pipe; with 1-inch covering the loss is 0·4 thermal unit, and with a 2-inch covering 0·24 thermal unit.[1]

All water present in the steam should, as far as possible, be separated from it, so that the steam may enter the cylinder dry, and for this purpose it is usual to fix a *separator* as near as possible to the engine. The action of one form of separator, of which there are various designs, will be understood by reference to Fig. 129. The wet steam enters the chamber at the top, and passes through a spiral passage downwards towards the bottom of the separator. The whirling motion of the steam thus set up causes the particles of water present in the steam to strike the sides of the chamber, and to flow to the bottom of the vessel. The steam passes forward in a more or less dry condition, in an upward direction through the exit pipe, the bottom of which is some distance from the bottom of the separator. Connected with the separator is a "steam trap" into which the water is collected, and from which it is passed into the feed-tank. A gauge-glass is fitted to show the height of water present in the bottom of the separator.

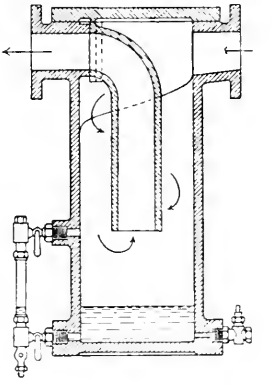

FIG. 129.

3. **Initial Condensation.**—Next to the loss of heat at the exhaust, that due to initial condensation of steam in the cylinder is the most serious of the losses connected with the use of steam as a working fluid; and the endeavour to prevent the loss from this cause has accounted for most of the improvements in the steam-engine since the time when James Watt invented the separate condenser. Before this time the cylinder was used alternately as a steam-cylinder and a condenser.

[1] These numbers are deduced from a table by Mr. A. G. Brown in "The Indicator."

When steam from the boiler is admitted to the cylinder with the piston at the beginning of the stroke, it comes in contact with the metallic surfaces of the cylinder cover, the face of the piston, the walls of the steam ports, and more or less area of the circumferential surface of the cylinder barrel.

If all these surfaces were as hot as the steam which enters the cylinder, no transfer of heat would take place between the steam and the metal, and therefore there would be no initial condensation of the steam.

But in practice the temperature of the walls is always lower than that of the entering steam, the walls being cooled during expansion and during exhaust, by having been in contact with the comparatively cool steam of reduced pressure at these periods. Consequently, during admission of steam at the beginning of the stroke, condensation takes place, till the walls are heated up to a temperature approaching that of the initial steam. Hence the weight of steam admitted to the cylinder per stroke, up to point of cut-off, is greater than that present in the cylinder as steam, by the amount condensed during admission in the process of warming up the cylinder walls.

Condensation, then, up to point of cut-off is due to the heat lost in warming up the metallic walls with which the steam comes in contact in the cylinder.

In addition to this, as already explained in the chapter on temperature-entropy diagrams, there is the condensation which takes place after cut-off due to the work done during expansion at the expense of the internal energy of the steam.

Considering the amount of steam condensed in the cylinder, it would seem, at first sight, that the cylinder must gradually become choked with water. Such is more or less the case when the engine is started, and before the cylinders have been properly heated up, and to get rid of this water, *relief-cocks* are fitted at each end of the cylinder, which are always opened when the engine is started, so as to *blow through* and relieve the cylinder of the water deposited.

As the temperature of the cylinder walls gradually increases, less water is deposited. If the relief-cocks are now shut, more or less condensation will still continue, but the water deposited is usually removed from the cylinder by re-evaporation.

Re-evaporation.—During the stroke of the piston, as soon as cut-off takes place, the pressure of the steam gradually falls, and the water present, owing to the removal of the pressure upon it, begins to re-evaporate as soon as the pressure of the steam falls below that corresponding with the temperature of the water in the cylinder. This point generally occurs soon after cut-off, and the re-evaporation continues as the expansion continues, the weight of steam present, as steam, gradually increasing towards the end of the stroke. When the exhaust port opens, the pressure is, more or less suddenly, still further reduced and the rate of re-evaporation accelerated, and during the exhaust stroke the water of initial condensation more or less completely disappears as dry steam.

The heat required for re-evaporation is obtained partly from the heat in the water itself, but chiefly at the expense of the heat in the cylinder walls; hence the greater the re-evaporation the more heat flows from the walls, and the more heat must be given up to the walls on the succeeding stroke by the steam during admission.

The heat given up by the steam to the walls is practically lost (except for the small amount of work done by re-evaporated steam), because this heat, which is again returned by the walls, is given up during exhaust, and thus increases the already large exhaust waste.

Mean Temperature of Cylinder Walls.—From the experiments of Messrs. Bryan Donkin, Callendar, and Nicolson, it has been shown that the cylinder walls may be divided into two parts, namely, the outer portion, where the temperature is constant; and the inner or "periodic" portion, where the temperature fluctuates with the temperature of the steam in contact with it.

The depth of the periodic portion is usually very small, and the less so as the time of interaction is less between the steam and the cylinder walls.

In all cases economy results from raising the mean temperature of the walls nearer to that of the initial steam in the cylinder. The mean temperature of the walls is raised as the weight of steam passing through the engine per minute is increased, and the condensation is thus reduced per pound of steam supplied.

Conversely all causes tending to reduce the mean temperature of the cylinder walls tend also to increased cylinder condensation, and therefore to increased consumption of steam per I.H.P. per hour.

$$\text{Weight of metal heated} = \left\{ \begin{array}{l} \text{thermal units absorbed} \div (\text{specific heat} \\ \text{of iron} \times \text{degrees rise of temperature}) \end{array} \right.$$

Range of Temperature.—The range of temperature of the steam in the cylinder is the difference $(t_1 - t_3)$, where t_1 is the temperature during admission, and t_3 the temperature of exhaust. The range of temperature is thus independent of the point of cut-off.

But cylinder condensation depends, not directly on the *range* of temperature of the steam, but on the *mean* temperature of the internal portion of the cylinder walls, and the following relations should be noted between range of temperature of the steam and mean temperature of the walls:—

(1) For a given constant range of temperature of the steam in a cylinder, the mean temperature of the walls increases as the point of cut-off is later; hence the mean temperature, and also the amount of cylinder condensation, may vary considerably with the same range of temperature.

(2) The mean temperature of the walls may remain constant for any number of different ranges of temperature above and below the mean; hence the amount of cylinder condensation may vary considerably with the same mean temperature, being greater as the difference between the initial temperature of the steam and the mean temperature of the walls is greater, and *vice versâ*.

Wet Steam supplied to Cylinder.—Experiment has shown that steam admitted to the cylinder initially wet tends still further to increase initial condensation, at least up to a certain limit, and, conversely, the drier the steam the smaller the heat interaction between the steam and the cylinder walls. Hence the importance of draining steam-pipes and valve chest, as already pointed out.

Water entering the cylinder with the steam tends to become partially evaporated in passing through the cylinder, because the sensible heat contained in the water on entering the cylinder is greater than will be retained by it on leaving, hence a portion of the original water is evaporated by the heat liberated at the lower pressure.

4. **Condensation due to Work done during Expansion.**—In addition to initial condensation due to interchange of heat between the steam and the cylinder walls, there is, during expansion in the cylinder, an internal or molecular liquefaction due to work performed at the expense of the internal energy of the steam; therefore the greater the expansion the wetter the steam becomes. The extent of the condensation due to work done has been already explained under temperature-entropy diagrams (p. 44), and on unjacketed cylinders the causes tending to wetness of exhaust exceed those tending to dryness.

Speaking generally, the amount of initial condensation depends—

(1) Upon the difference between the initial temperature of the steam entering the cylinder and the mean temperature of the cylinder walls, condensation being less as the mean temperature of the walls approaches the temperature of the initial steam.

(2) Upon the point of cut-off in the cylinder; the mean temperature of the cylinder walls is higher, and therefore the condensation is less, as the cut-off is later—that is, as the greater weight of steam is passed through the cylinder per stroke, other things being equal.

(3) Upon the time of contact of the steam with the cylinder walls, condensation being less as the rate of revolution (N) increases, other things being equal.

(4) Upon the extent of cylinder surface exposed to the steam when the piston is at the beginning of the stroke, condensation being less as the area of metallic surface taking part in the heat interchange is less.

The measure of initial condensation in the cylinder has been expressed by Escher thus:

$$CW = \rho A \frac{sT_1}{\sqrt{N}T_m}$$

where C = initial condensation in B.T.U. per pound of steam; W = weight of feed-water in pounds per stroke; s = exposed surface of the metal at beginning of stroke; T_1 = initial temperature of steam; T_m = mean temperature of cylinder walls (absolute scale); ρ = the density of the entering steam; N = revolutions per minute; A is a

constant, which is given as 80 for unjacketed cylinders, and 56 for jacketed cylinders. This constant will vary with varying types of engines.

To find the Weight of Steam accounted for by the Indicator Diagram.—To find the weight of steam in a cylinder per stroke from the indicator diagram, it is necessary to know the volume occupied by the steam present in the cylinder at the point of the stroke chosen for measurement, and the pressure of steam at that point; then, knowing from the Steam Tables the weight per cubic foot of steam at the given pressure, the weight required can be at once determined.

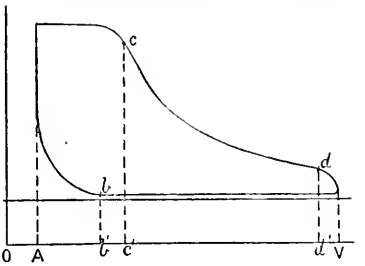

Fig 130.

The points from which measurements are taken must be chosen from that portion of the diagram where the slide-valve covers the ports, and where the steam is completely enclosed within the cylinder, and its volume definitely known. In other words, the points must be chosen on the expansion curve after cut-off and before release, or on the compression curve after exhaust closure and before opening of the port for readmission.

Thus, referring to Fig. 130, OA = clearance volume, AV = piston displacement, w_b = weight of 1 cub. ft. of steam at pressure b. All volumes are expressed in cubic feet. Then—

(1) Weight of dry steam at b.

$$= \left\{ \left(\text{piston displacement} \times \frac{\text{A}b'}{\text{AV}} \right) + \text{clearance volume} \right\} w_b$$

(2) Weight of dry steam at c

$$= \left\{ \left(\text{piston displacement} \times \frac{\text{A}c'}{\text{AV}} \right) + \text{clearance volume} \right\} w_c$$

(3) Weight of dry steam at d

$$= \left\{ \left(\text{piston displacement} \times \frac{\text{A}d'}{\text{AV}} \right) + \text{clearance volume} \right\} w_d$$

In the same way, the weight of steam may be determined for any other point on the expansion curve.

To find the Dry Steam Fraction at Cut-off.—The indicator diagram accounts for all the steam present in the cylinder *as steam*, but it gives no clue as to the amount of water present in the cylinder at the same time, or as to the extent of the loss by leakage, unless we have first some independent means of determining the weight of steam supplied to the engine, as by weighing the feed-water, for example, or by other methods to be afterwards described. Then, to find the dry steam fraction the facts required are as follows:—

(1) Total weight of feed-water per hour ÷ number of strokes per

hour = actual weight of working fluid passing through cylinder per stroke, called "cylinder-feed."

(2) Weight of steam per stroke (assumed dry) retained in the cylinder as clearance steam is determined from compression curve at b, the point b being chosen as near as possible to the actual exhaust closure (Fig. 130).

(3) Total weight of steam in cylinder per stroke after cut-off and during expansion = cylinder-feed + clearance steam.

(4) Weight of dry steam at cut-off (determined from the indicator diagram by measurement, as already explained).

(5) Dry steam fraction at cut-off = (dry steam measured from indicator diagram) ÷ (cylinder-feed + clearance steam).

In the same way the dry steam fraction may be determined by measurement for any other portion of the expansion curve up to point of release. These results may be shown graphically by the following method :—

To apply the Saturation Curve to an Indicator Diagram.—This curve represents the curve of expansion which would be obtained if the whole of the steam and water passing through the engine per stroke were present in the cylinder as dry saturated steam. It also supposes no condensation during expansion. This is the ideal curve which is aimed at when the steam jacket is used.

To draw the curve, set off, as before explained, the clearance line and the zero line of pressure, and draw a horizontal line through any point c (Fig. 131) on the expansion curve of the diagram at cut-off or beyond it; then ad is the clearance volume, ab is the volume of the known weight of steam in the cylinder during expansion, supposing it all present as dry saturated steam at pressure c, and including the weight of steam enclosed during compression, and the weight of steam passing through the cylinder per stroke. Also $ac \div ab$ is the dry steam fraction at c. The steam in the clearance space at beginning of compression is assumed to be dry saturated steam.

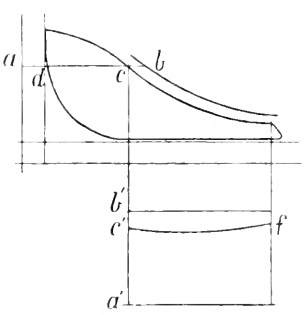

FIG. 131.

The dry steam fraction curve below the indicator diagram (Fig. 131) is constructed for all points of the expansion curve from cut-off to release by setting up from a horizontal line to any scale the ratio $a'c' \div a'b' = ac \div ab$. The fraction $cb \div ab$ represents the loss by condensation and by leakage.

Application of the Indicator Diagram to the Temperature-Entropy Chart.[1]—The temperature-entropy chart is illustrated on Plate I., and consists, as already explained, of that portion of the temperature-entropy diagram enclosed between the "water-line" and the "dry-steam line," on the left and right respectively, the horizontals

[1] See also Boulvin's method, p. 304.

intersecting these lines being lines of temperature. The portion of the chart used will depend, of course, upon the range of temperature between which the particular engine works.

The object of placing the indicator diagram upon the chart is to represent by an area the heat-units converted into work per pound of steam expanding in the cylinder, independently of all considerations as to size or power of the engine, and to show what the extent of the losses are as compared with a perfect engine working between the same limits of temperature.

The temperature-entropy diagram drawn upon the chart differs from the indicator diagram in giving, not the work done per stroke in foot-pounds, but the work done per pound of steam in thermal units.

It is necessary first to know the weight of steam passing through the engine per stroke, and the weight of steam enclosed in the clearance space. Then the saturation curve can be applied to the indicator diagram, as explained on p. 116.

If it is required only to compare the actual expansion line of the indicator diagram with the adiabatic or saturated-steam lines of the temperature-entropy diagram, then the method is similar to that shown in Fig. 131, the value of $ac \div ab$ being determined for a number of points between cut-off and release. Then, knowing the pressure and dry steam fraction for each point taken on the indicator diagram, corresponding points, $a'c' \div a'b'$, on the same pressure lines may be located at once upon the temperature-entropy chart (Fig. 133). For this purpose no constant-volume lines are required to be used; but when it is required to transfer points other than those on the expansion curve, it is necessary to find the *diagram factor* of the indicator diagram.

If the steam expanding in the cylinder, including the steam enclosed at compression, weighs exactly 1 lb., the diagram factor will be 1. If the actual weight expanding is either more or less than 1 lb., it is necessary to find the factor by which the actual weight of steam must be multiplied, so that *actual weight* $\times$ *diagram factor* $= 1$;

$$\text{or diagram factor} = \frac{1}{\text{actual weight}}$$

The diagram factor is used in order to express the changes of the indicator diagram on the chart in terms of 1 lb. of steam.

If, now, any point d (Fig. 132) on the indicator-diagram be taken, and the volume of the steam in the cylinder corresponding with that point be determined, this volume multiplied by the diagram factor gives the position of the point d as to volume on the chart (Fig. 133), and, its pressure being known, its position is completely determined.

EXAMPLE.—In Fig. 132 take any point c; then c' can be immediately found on Fig. 133 by finding the line of pressure on the chart corresponding with the pressure of c on the indicator-diagram, and making the ratio $a'c' \div a'b' = ac \div ab$.

To find any other point, as d', not on the expansion line, find the actual volume of the steam in the cylinder at d, and multiply this volume by the diagram factor. This gives the constant-volume line on which d' will be found, and, the pressure of d being known, the position of d' is completely determined. Any other points may be similarly found. A free curve is drawn through the points thus found.

In the example chosen, the mean-admission line up to cut-off has been substituted for the actual line. The mean-admission line and the back-pressure line are both taken back to the water-line, and the compression curve is neglected.

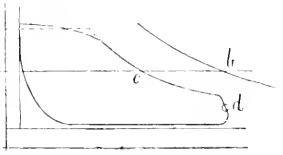

Fig. 132.

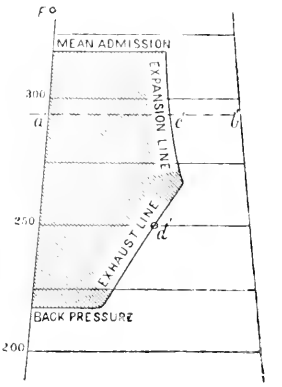

Fig. 133.

If there were no losses whatever in steam-engine cylinders, the diagrams of work done per pound of steam would fill the whole area between the water-line on the left and the vertical adiabatic line on the right (Fig. 134), and between the upper horizontal line representing the pressure of steam at the engine stop-valve, and the lower horizontal line representing the pressure in the exhaust pipe. The object is to fill up as much as possible of the available area on the chart.

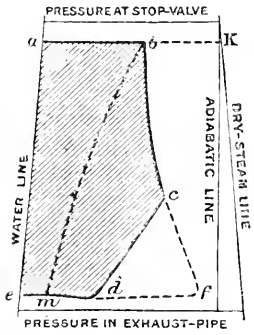

Fig. 134.

It will be seen that (neglecting the effects of compression) there are four conditions which determine the gain or loss in the thermal efficiency of the steam expanding in the cylinder.

(1) The nearness of the mean-admission pressure line ab to that of the source from which the steam is supplied.

(2) The proportion of dry steam present in the cylinder; in other words, the extent to which the dry-steam fraction line bc of the actual engine diagram, shown shaded, approaches the dry-steam line of the chart, enlarging or otherwise the area of the shaded diagram between the water-line and the dry-steam line.

(3) The number of expansions of the steam, or the extent to which the pressure at end of expansion approaches the back pressure. Thus (Fig. 134) the line cd represents fall of pressure during release, the

fall taking place at nearly constant volume, and following very nearly a constant-volume line of the chart.

When the terminal pressure of expansion is carried down to back pressure, the expansion line *bc* extends to *f*; but as the difference of pressure between that at the end of the expansion and the back pressure becomes greater, the further the release-corner line *cd* recedes from the point *f*, the blunter the corner becomes, and the greater the loss of area due to incomplete expansion. When the steam is admitted to the end of the stroke, and the engine is worked without expansion, the line *cd* recedes to the position shown by the dotted line *bm*, where *bm* is also a line of constant volume.

(4) The nearness of the back-pressure line to that representing the pressure in the exhaust pipe.

Relative Effects of Cylinder Condensation and Number of Expansions of Steam in a Single Cylinder.—If the indicator diagram from an engine with an early cut-off be drawn upon the temperature-entropy chart, the diagram will have some form similar to that shown by the shaded area. If, now, the indicator diagram for a later cut-off be transferred, it will have some position extending further towards the right to the dry-steam line, as shown by the unshaded portion; and showing a larger dry steam fraction, and a gain of work done per pound of steam by increased dryness of the steam. But with the earlier cut-off there was a gain of area by increased expansion, and these two areas—one due to increased dryness, and the other due to increased expansion—tend to neutralize each other. For a limited number of expansions, the gain by increased expansion is the larger gain, but beyond this the gain may become negative owing to loss by condensation. The best number of expansions in any cylinder is that which gives the largest

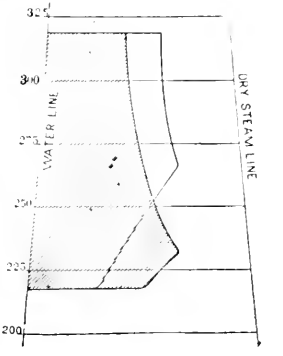

Fig. 135.

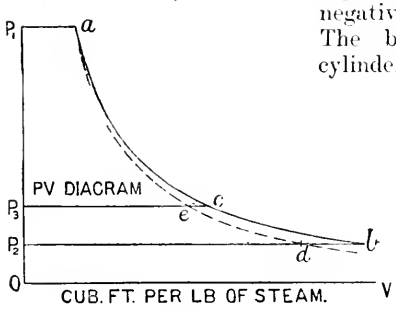

Fig. 136.

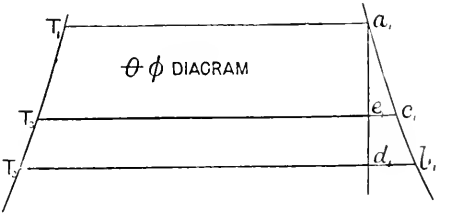

Fig. 137.

work area per pound of steam passing through the engine.

Usually, from three to five expansions in one cylinder give a

maximum work area ; but the best number of expansions, considered from this point of view, varies with different types of engines, and can only be determined by experiment.

To draw the Adiabatic Curve on the pv Diagram from the Temperature-entropy Chart.—From the point O (Fig. 136) draw rectangular axes OP_1 and OV to any convenient scales. At P_1, P_2, P_3, etc., draw horizontal lines P_1a, P_2b, etc., representing to scale the volumes—taken from the Steam Tables—of 1 lb. of saturated steam at absolute pressures P_1, P_2, etc., and join the points *a*, *c*, *b* by a free curve. Then *acb* represents the curve of volumes for 1 lb. of saturated steam without condensation. Divide the line P_3c at *e*, so that $P_3e \div P_3c = T_3e_1 \div T_3c_1$ on the temperature-entropy chart (Fig. 137), and so on for any number of divisions. Then, by joining the points so found, we obtain the dotted line *aed* on the *pv* diagram (Fig. 136), which is the adiabatic curve required.

Hirn's Analysis.—This is a method of analyzing the action of the steam passing through the cylinder, and showing by areas the quantities of heat interchanged between the steam and cylinder walls. This method, first employed by Hirn, has been developed graphically by Prof. Dwelshauvers Dery, of Liège.[1]

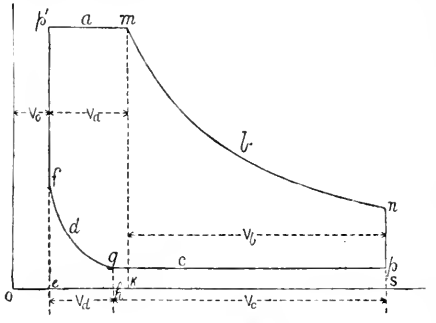

FIG. 138.

The portions of the stroke are indicated by subscript letters corresponding with those on the diagram (Fig. 138); thus *a* for admission, *b* for expansion, *c* for exhaust, *d* for compression. Then—

V_a = volume in cubic feet described by piston during admission.
V_b = " " " " " expansion.
V_c = " " " " " exhaust.
V_d = " " " " " compression.
V_o = volume in cubic feet of clearance space.
V = whole volume displaced by piston.

Work done in Thermal Units.—The work done in thermal units by the steam during the several portions of the stroke is represented by T with its appropriate subscript, thus :

T_a = work done during admission = area *ep'mke* in thermal units.
T_b = " " expansion = " *kmnsk* " "
T_c = " " exhaust = " *hgpsh* " "
T_d = " " compression = " *efghe* " "
$T_a + T_b$ = absolute work done by steam = area *ep'mnse*.
$(T_a + T_b) - (T_c + T_d)$ = net area of indicator diagram.

Heat exchanged.—The quantities of heat in thermal units exchanged

[1] *Proc. Inst. C.E.*, vol. xcviii. p. 254.

between the steam and the metal are represented by areas R_a, R_b, etc., the areas being drawn to the same scale as the work diagram.

R_a = heat exchanged between metal and steam during admission.
R_b = ,, ,, ,, ,, expansion.
R_c = ,, ,, ,, ,, exhaust.
R_d = ,, ,, ,, ,, compression.
E = heat lost by external radiation.
Q = the quantity of heat supplied to cylinder per stroke by admission steam.
Q′ = the quantity of heat supplied from the jacket.
Q + Q′ = total heat supplied.

Weight of Steam.—Let the weight of wet steam admitted to the cylinder per stroke = M lbs., of which Mx is the weight of dry steam, and M$(1 - x)$ is the weight of water present in the steam. Then, neglecting the effects of leakage, the actual condition of the steam at any point in the expansion curve is known, since the actual weight of steam passing through the cylinder per stroke is known by a test of the engine.

Let also the weight of steam retained in the clearance space each stroke = M_g. The actual weight of this steam may be measured, knowing the pressure g at beginning of compression, and assuming the steam dry at this point.

Quantity of Heat.—The heat Q required to raise M lbs. of water from 32° Fahr. to its temperature of admission, and to evaporate the portion Mx, is—

$$Q = M(h + xL)$$

For superheated steam heated from normal temperature t_n of saturated steam to temperature t_s—

$$Q = M\{h + L + 0{\cdot}48(t_s - t_n)\}$$

Internal Heat of Steam.—The internal heat of the steam in the clearance space at commencement of compression, assuming the steam dry—

$$= M_g(h_g + \rho_g)$$

where M_g, h_g, and ρ_g represent weight, sensible heat, and internal heat respectively of steam at pressure and volume at point g on the diagram (Fig. 138).

The internal heat at cut-off $= (M + M_g)(h_m + x_m\rho_m)$

where x_m = dry steam fraction at point m on the diagram (Fig. 138).

The internal heat at end of expansion $= (M + M_g)(h_n + x_n\rho_n)$

And similarly for the several parts of the cycle.

Thermal Units interchanged between the Steam and the Metal enclosing the Steam in the Cylinder.—1. To find the heat R_a exchanged during admission. The heat supplied is Q; the heat in the cylinder at admission is $M_f(h_f + x_f\rho_f)$; the work done is T_a; and the heat remaining in the steam at cut-off is $(M + M_g)(h_m + x_m\rho_m)$. Then—

$$Q + M_f(h_f + x_f\rho_f) = T_a + R_a + (M + M_g)(h_m + x_m\rho_m) \quad (1)$$

from which R_a may be obtained.

If the steam is superheated at cut-off, this equation will be modified by corrected values for the heat supplied, and the heat contained in the steam at cut-off, as explained above, and in the chapter on superheating. The temperature of superheated steam at cut-off may be determined by its increased volume over that of the same weight of saturated steam at the same pressure, it being assumed that superheated steam behaves as a gas, and that its increase of absolute temperature is proportional to its increase of volume.

2. To find R_b, the heat exchanged during expansion. The heat in the steam at the end of expansion is $(M + M_g)(h_n + x_n\rho_n)$; the external work is T_b; the heat present at beginning of expansion is $(M + M_g)(h_m + x_m\rho_m)$; then—

$$(M + M_g)(h_m + x_m\rho_m) = T_b + R_b + (M + M_g)(h_n + x_n\rho_n) \quad (2)$$

from which R_b may be obtained.

3. To find R_c, the heat rejected by the cylinder walls to the steam during exhaust. The heat in the steam at the end of expansion is $(M + M_g)(h_n + x_n\rho_n)$; the work done upon the steam during exhaust is T_c; the heat in the steam at beginning of compression, assuming the steam of compression dry, is $M_g(h_g + x_g\rho_g)$.

The heat rejected to condenser in exhaust steam is measured by a test of the engine, and by actually weighing the steam condensed in a surface condenser in a given time, and then dividing the amount weighed by the number of strokes made by the engine in that time. This gives the weight of steam (M) exhausted per stroke. Then M lbs. of steam become water at temperature t. The heat in this condensed steam is now Mh_t. The heat carried away by the condensing water equals the weight of condensing water (W) per stroke multiplied by its increase of temperature in passing through the condenser $= W(t_1 - t_2)$. Then—

$$(M+M_g)(h_n+x_n\rho_n)+T_c=R_c+Mh_t+W(t_1-t_2)+M_g(h_g+x_g\rho_g) \quad (3)$$

from which R_c may be obtained.

4. To find the heat, R_a, exchanged between the walls and the steam during compression.

The internal heat in the steam at beginning of compression is $M_g(h_g + x_g\rho_g)$. Then work is done upon it $= T_a$ during compression; and the internal heat of the steam at end of compression is $M_f(h_f + x_f\rho_f)$; then—

$$M_g(h_g + x_g\rho_g) + T_a = M_f(h_f + x_f\rho_f) + R_a \quad . \quad . \quad . \quad (4)$$

from which R_a may be obtained.

Graphic Representation of the Quantities of Heat exchanged. Scale of the Diagram.—The quantities of heat employed in the performance of work may be measured directly from the indicator diagram.

The volume described by the piston is represented by the length of the indicator diagram. From this a scale of cubic feet of piston displacement may be made upon the diagram.

The vertical scale of pressures on the indicator diagram represents pressures per square inch; but it may be converted into a scale of

pressure in pounds per square foot by multiplying the scale by 144, or by dividing the unit of the inch-pressure scale by 144 to represent a pressure of 1 lb. per square foot. Then an area having P, or the unit of pressure per square foot for height, and V, or the unit of volume in cubic feet for length, = 1 foot-lb. of work. This area multiplied by 778 represents a thermal unit on the diagram, and is the unit chosen for representing also the heat-exchanges. During admission, if P_a is the pressure per square foot, and V_a the volume displaced by the piston up to point of cut-off = *os* (Fig. 139), then work done = $P_a V_a$ foot-lbs. = $\frac{P_a V_a}{778}$ thermal units = T_a. Hence—

$$P_a = \frac{778 T_a}{V_a}$$

The area $P_a V_a$, measured from the zero lines of pressure and volume, represents to the scale of the diagram the heat expended in the cylinder in doing the work of admission = area *oefs*.

Heat-exchange Areas.—Having obtained R_a by equation (1), a rectangle is drawn on the same base V_a = *os*, and at height r_a = *oe*, so that—

$$r_a = \frac{778 R_a}{V_a}$$

Then the rectangle at a height r_a above *os* represents, to the same scale as the indicator diagram of work, the heat given by the steam to the cylinder walls.

Similarly for the other parts of the stroke, the rectangles can be drawn representing R_b, R_c, and R_d respectively:

$$r_b = \frac{778 R_b}{V_b}; \quad r_c = \frac{778 R_c}{V_c}; \quad r_d = \frac{778 R_d}{V_d}$$

These rectangles represent the *mean* result of the heat-exchanges during the several portions of the stroke.

Distinction between Positive and Negative Quantities of Heat.—In the forward stroke during admission, the heat transferred from steam to metal is considered positive, and the rectangle R_a representing the heat quantity is drawn above the zero line on the base *os* (Fig. 139). For the heat-exchange during the expansion part of the stroke, the heat passes conversely from the metal to the steam; the interchange is considered negative, and the rectangle R_b is drawn below the zero line on the base *st* down to r_b.

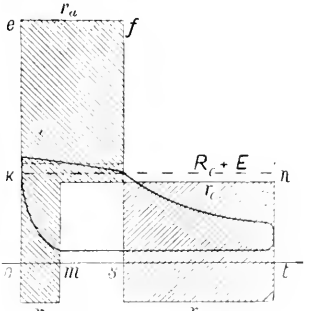

FIG. 139.

For the backward stroke, the opposite positions are adopted for the positions of the rectangles, namely, above the zero line for negative exchange—that is, from metal to steam; and below the zero line

for positive exchange—that is, from steam to metal. Hence the exhaust rectangle R_c is drawn above the zero line on the base *mt*, and the compression rectangle R_d is drawn below the zero line on the base *om*. The positive and negative quantities are further distinguished by the direction of the cross-hatching on the rectangles. The sum of the rectangles $R_a + R_d - R_b = R_f =$ the net heat-exchange while the steam is enclosed in the cylinder; and rectangle R_f = area *oknt* may be constructed on the base *ot*. The area $R_f =$ rectangle R_c, the heat rejected to exhaust, if there were no loss by external radiation, E; but since there is always some loss E in practice, then—

$$R_a - R_b + R_d = R_c + E$$

from which E may be obtained. In Fig. 139 the difference between the areas of the rectangles *oknt* and the rectangle R_c, expressed as thermal units, represents the loss E.

If the cylinder is steam-jacketed, the water of condensation from the jacket is weighed separately, and the weight of water collected from the jacket per hour divided by the number of strokes of the engine per hour gives the weight (M_j) of steam condensed in the jacket per stroke. Then the heat-units (Q') per stroke given up by the jacket—

$$Q' = M_j \times L$$

where L = the latent heat of steam at the pressure in the jacket.

If R_c = heat rejected to condenser during exhaust, T = work done by steam, then—

$$Q + Q' = T + R_c + E$$

or, in words, the total heat supplied, including the jacket heat, is equal to the heat expended on work done, plus the heat rejected to condenser, plus the heat lost by external radiation.

CHAPTER VII.

COMPOUND ENGINES.

Various methods have been adopted to increase the efficiency of the steam in the cylinder, including—

1. Compounding the cylinders.
2. Steam-jacketing.
3. Superheating.
4. Increased rotational speeds.

And these methods will now be described in the above order.

Compound Engines.

It will be clear, after studying the temperature-entropy chart, that the proportion of useful work to be obtained per pound of steam will increase as the initial pressure increases, providing advantage is taken of the possibility of working the steam expansively so as to recover a portion of its internal energy, and providing also that initial condensation and all other condensation can be reduced.

Pressures are gradually increasing; large ranges of expansion are being obtained by means of the multi-cylinder engine; reduced losses by condensation are being secured by compounding, steam-jacketing, superheating, and increased rotational speeds.

Referring to the compound engine and the reasons for its adoption, there are three important objections to working steam at high pressures and large expansion in *one* cylinder, and these objections become more serious as the pressure and number of expansions increase.

1. The volume of the cylinder must be sufficient to provide for the required expansion of the steam, but it must also be sufficiently strong to carry the maximum pressures. Similarly, also, the working parts require to be sufficiently large and strong to transmit the maximum stresses; and since the maximum pressures and stresses are greatly in excess of the mean when the number of expansions in one cylinder is large, the engine becomes excessively heavy and costly compared with the power exerted.

2. The loss by initial condensation increases rapidly as the number of expansions in one cylinder increases.

3. The turning effort on the crank-pin becomes excessively variable.

By the introduction of the compound engine, the range of stress on the working parts, the loss by initial condensation, and the irregularity of the turning effort are much reduced, as compared with a

single-cylinder engine working with the same initial pressure and number of expansions. Hence, for smoothness of working, with a wide range of pressures, and for economy of fuel, the compound engine was an important advance on the simple engine.

The improvement in the distribution of the stresses, and of the turning effort effected by compounding the cylinders, is dealt with later. The reduction of the loss by initial condensation in compound engines as compared with single-cylinder engines working through the same range of pressures may be accounted for as follows:—

1. Because the heat transferred from the steam to the metal depends upon the difference of temperature between the initial steam and the metal with which it is in contact; but in a compound engine the only cylinder coming into contact with condenser pressures and temperatures is the low-pressure cylinder, and the further removed from the low-pressure cylinder, the higher the temperature of the walls of the preceding cylinders. This corresponds also with the temperature of the steam passing through the engine, the hot steam meeting the hot walls, and the cooler steam the cooler walls;[1] hence the difference of temperature between the steam and the walls in contact with it being reduced, the condensation is reduced also.

2. Because initial condensation in the successive cylinders of a compound engine is not cumulative, but is approximately that due to one cylinder only. The water due to initial condensation in each cylinder is usually re-evaporated during the exhaust stroke in that cylinder, and leaves the cylinder as steam, to provide for the needs of the succeeding cylinder, and so on.

Methods of Compounding.—The essential feature of compounding is to exhaust the steam from one cylinder into a second cylinder of larger volume, where the steam may do further work by continued expansion. This may be repeated through three or four or more successive cylinders.

Engines may be compounded by exhausting from a high-pressure cylinder into a low-pressure cylinder of one or other of the following types:—

1. A cylinder of larger diameter but the same stroke, which is the usual arrangement.

2. A cylinder of the same diameter but longer stroke.

3. A cylinder having the same dimensions as the high-pressure cylinder, but with its piston making a larger number of reciprocations or strokes per minute, the engines working on independent cranks.

4. Any combination of these methods.

In all cases the work done in a cylinder, or between the pistons of a compound engine, or in any combination whatever of cylinders and pistons $= p_m(V_2 - V_1)$, where p_m is the mean pressure, and $(V_2 - V_1)$ the increase of volume while the steam is enclosed, and independently of the way in which the increase of volume is obtained.

Double-expansion compound engines may be divided into two

[1] The high-*pressure* cylinder might be called with equal correctness the high-*temperature* cylinder, and the low-*pressure* cylinder the low-*temperature* cylinder.

main classes: (1) the Woolf type, in which the pistons of each cylinder commence the stroke simultaneously, as in tandem engines (Fig. 140), or those with cranks at 0° or 180° apart; (2) the Receiver type, in which the cranks are set at an angle other than 0° or 180° with each other, and in which the steam exhausted from the first cylinder is passed into a chamber called the receiver, between the two cylinders, where it

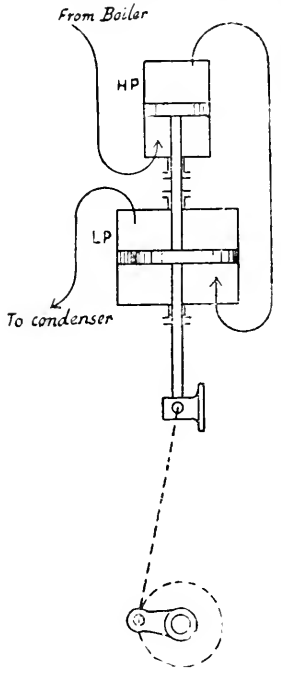

Fig. 140.

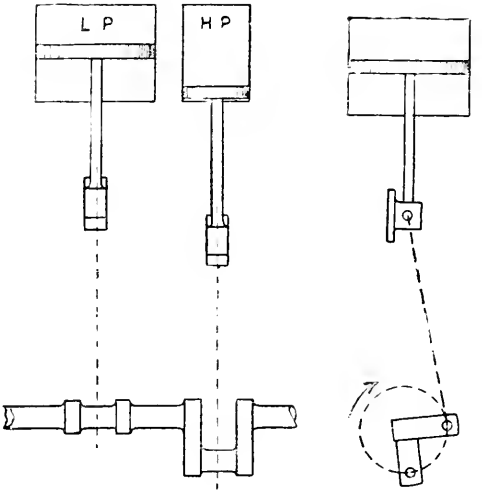

Fig. 141.

is retained till the second cylinder is ready to receive it.

In practice it is usually found unnecessary to have a separate special chamber for a receiver, as the exhaust pipe of the high-pressure cylinder and the valve chest of the low-pressure afford sufficient capacity for the purpose.

Number of Cylinders.—Having determined the terminal pressure desired at the end of the expansion, and the number of expansions or point of cut-off in each cylinder, then the number of cylinders will depend upon the range of pressure, and will increase as the initial pressure increases. Thus for condensing engines the terminal pressure may be 10 lbs. absolute, and for non-condensing engines 20 lbs. absolute, and the number of expansions in each cylinder, say, three. Then for the condensing engine (Fig. 142), if the ratio of the cylinder volumes is 1 : 3, and there were no losses, the pressure at cut-off in the low-pressure cylinder is approximately 30 lbs. If now the high-pressure cylinder at end of stroke contains the same volume of steam as the low-pressure cylinder at cut-off, then the pressure at end of

stroke in the high-pressure cylinder is 30 lbs., and again cutting off at $\frac{1}{3}$ of the stroke, the initial pressure in the high-pressure cylinder is 90 lbs. absolute.

For boiler pressures of 150 to 180 lbs. and condensing engines, the steam is expanded in three cylinders successively, which arrangement is known as the triple-expansion engine.

At boiler pressures of 200 lbs. and upwards quadruple-expansion engines are used.

Equal Distribution of the Work and Initial Stresses between the Cylinders.—In the example just chosen of a two-cylinder, or double-expansion compound, with the volume of the high-pressure cylinder equal to the volume of the low-pressure cylinder up to cut-off, the curve of expansion is continuous, as shown in Fig. 142, and there is no loss by compounding with such an arrangement, as the work done

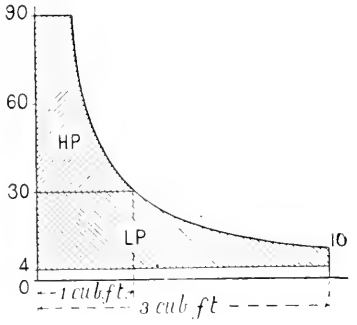

FIG 142.

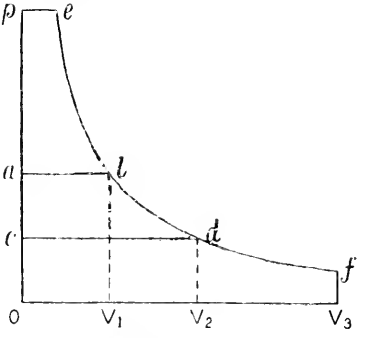

FIG 143.

is the same theoretically as would be done in a single cylinder of the same dimensions as the low-pressure cylinder.

But from Fig. 143 it will be seen that it is possible to secure this with any number of different ratios between the cylinders; thus, if OV_3 = volume of low-pressure cylinder, then if *ab* be drawn as shown, *Oa* may be taken as the back pressure on the high-pressure cylinder and the forward pressure on the low-pressure cylinder; OV_1 = volume of the high-pressure cylinder; *peba* is the work diagram for the high-pressure cylinder, and $abfc_3O$ is the work diagram of the low-pressure cylinder; *b* is the point of cut-off in the low-pressure cylinder; and $\frac{OV_3}{OV_1}$ is the ratio between the cylinder volumes.

Again, if *cd* had been drawn instead of *ab*, then *Oc* is the pressure between the cylinders; *pedc* and $cdfV_3O$ are the respective work diagrams; *d* is the point of cut-off in the low-pressure cylinder; and $\frac{OV_3}{OV_2}$ is the ratio between the cylinders.

Hence the ratios between the cylinders may be widely different.

In fixing the ratio for any given case, the ratio is so chosen that the effective work areas of the respective cylinders and the initial stresses on the respective pistons are as nearly as possible equal.

Taking the case illustrated in Fig. 144, where $p_1 = 100$, with 8 expansions; ratio of cylinder volumes 1 : 2; back pressure 4 lbs. absolute. Comparing the work done in the two cylinders and the initial stresses on the pistons, we have—

Mean effective pressure p_m in the high-pressure cylinder—

$$p_m = p_1 \frac{1 + \log_e r}{r} - p_b$$
$$= 100 \frac{1 + 1{\cdot}386}{4} - 25$$
$$= 34{\cdot}65$$

Mean effective pressure P_m in the low-pressure cylinder—

$$P_m = 25 \frac{1 + 0{\cdot}693}{2} - 4$$
$$= 17{\cdot}16$$

Multiplying p_m and v_1 and P_m and v_2, we have—

$$(34{\cdot}65 \times 1 = 34{\cdot}65) \text{ and } (17{\cdot}16 \times 2 = 34{\cdot}32)$$

that is, the work done in the two cylinders is practically equal.

Comparing now the initial stresses on the respective pistons, we have—since these stresses are in the ratio of the net initial pressures multiplied by the relative areas of the pistons—

$$(100 - 25)1 : (25 - 4)2 :: 75 : 42, \text{ or as } 1{\cdot}8 \text{ to } 1$$

In other words, the initial stress on the high-pressure piston is much in excess of that on the low—that is, the area of the high-pressure piston is too large. Hence, when the cylinders are designed to give

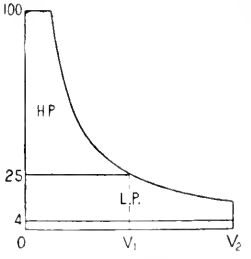

FIG. 144.

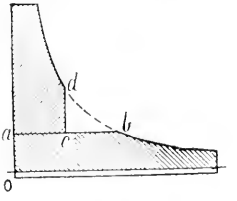

FIG. 145.

an equal distribution of the work with a continuous expansion line, the high-pressure cylinder is too large to maintain equality of initial stresses on the pistons; and at the loss of some efficiency, it is necessary in practice to reduce the dimensions of the high-pressure cylinder.

This may be done by retaining the cut-off at point b (Fig. 145) in the low-pressure cylinder, and reducing the high-pressure cylinder

volume from *ab* to *ac*. This arrangement will cause a fall or "drop" of pressure at the end of the stroke in the high-pressure cylinder from *d* to the receiver pressure *c*, and a consequent loss by "drop" of the triangular area *dcb*. Here the initial stress on the low-pressure piston is unchanged, while the stress on the high-pressure piston is reduced in the proportion of $ac \div ab$. By a certain amount of compromise, it will be possible in this way to approximately equalize both the work done and the initial stresses in the cylinders.

The same principles apply to the design of any number of successive cylinders.

Features of the Compound Engine.—1. *Effect of varying the Cut-off in the High-pressure cylinder on the Distribution of Power.* Suppose the cylinder ratios to be 1 : 2; the cut-off in the low-pressure cylinder to be constant at 0·5, and to enclose a volume at cut-off equal to the whole volume of the high-pressure cylinder. Then the effect on the distribution of power between the cylinders may be shown by the use of the diagram (Fig. 146), which assumes hyperbolic expansion. In practice this diagram is subject to many, and in some respects considerable, modification, but for obtaining a general idea of the various effects occurring in compound engines, whether for double, triple, or quadruple expansion, it is very helpful.

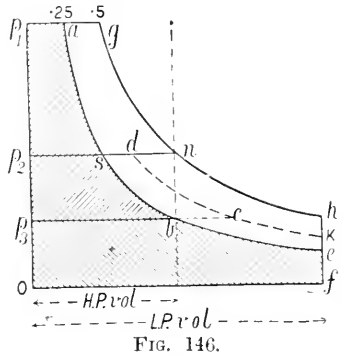

FIG. 146.

With a cut-off at 0·25 of the stroke in the high-pressure cylinder, and at an initial pressure p_1, the steam expands in this cylinder along *ab* to a terminal pressure $p_3 = p_1 \times 0{\cdot}25$, neglecting clearance. This is also the pressure in the receiver. Then the work diagram of the high-pressure cylinder is given by the area p_1abp_3, and of the low-pressure cylinder by the area p_3befo.

With a cut-off at 0·5 of the stroke in the high-pressure cylinder, approximately twice the weight of steam is supplied per stroke; the steam is exhausted from the high-pressure cylinder into the receiver at some higher back pressure p_2, acting as back pressure on the small piston and as forward pressure on the large piston, and the work diagrams are given by the areas p_1gnp_2 and p_2nhfo for the small and large cylinders respectively.

There is here, with a late cut-off, a large increase of work done in the low-pressure cylinder, while the work done in the high-pressure cylinder is nearly the same with a late as with an early cut-off.

The same point is illustrated by Figs. 147 and 148. These show that—when the power is regulated by the cut-off—as the cut-off in the high-pressure cylinder is made later, the total power of the engine is increased, and the larger share of the increased power is

taken in the low-pressure cylinder; with an early cut-off and at low powers, the larger share of the work is done in the high-pressure cylinder, and as this power is reduced to a minimum, the power in the low-pressure cylinder may be reduced to zero (Fig. 147).

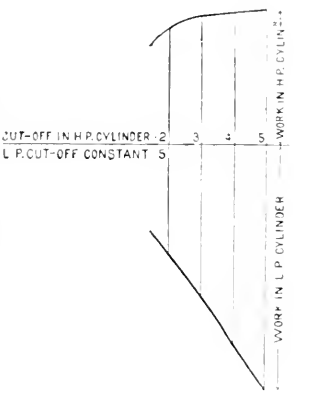

FIG. 147.

In non-condensing compounds, at light loads, if by extended expansion, the mean absolute forward pressure of the steam in the low-pressure cylinder falls below that necessary to overcome the resistances due to back pressure, and the friction of the moving parts of the low-pressure engine, then the low-pressure cylinder is worse than useless, and it may, in fact, become the cause of a serious loss of efficiency.

Hence non-condensing compound engines are most suitable where the load is fairly constant, and they should not be worked with a terminal pressure on the low-pressure cylinder below about 20 lbs. absolute. If expanded below atmospheric pressure, the low-pressure diagram will show a negative-work loop (see Fig. 150).

2. *Effect of throttling the Steam-supply on the Distribution of the Power between the Cylinders.*—Considering ratios of cylinders 1 : 2 as before, without drop and the cut-off in both cylinders constant at half-stroke. Then (Fig. 146) if the initial steam pressure be p_1, the terminal pressure in the high-pressure cylinder will be $p_1 \div 2$; this also will be the pressure in the receiver, and the terminal pressure in the low-pressure cylinder will be $p_1 \div 4$. The work areas in the high and low-pressure cylinders are p_1gmp_2 and p_2nhfo respectively.

If, now, the steam-supply be throttled down to p_2 lbs. $= \frac{1}{2}p_1$, then the effect on the distribution of power between the cylinders is seen; thus, area p_2sbp_3 for the high-pressure, and p_3befo for the low-pressure cylinder. At high powers the distribution is the same as in Case (1) with a late cut-off (0·5), but at low powers and with the steam-supply throttled, the work done in the high-pressure cylinder is now much reduced, while the work done in the low-pressure cylinder remains the same as in Case (1) with cut-off at 0·25. This shows a less satisfactory distribution of the power between the cylinders than if the power had been reduced by an earlier cut-off instead of by throttling. It also shows that, theoretically, throttling to a pressure p_2 is less economical than altering the cut-off from 0·5 to 0·25 with constant initial pressure, for in both cases the same weight of steam is exhausted per stroke, namely, the low-pressure cylinder volume at pressure fe, though, with throttling, the useful work area is reduced by the area p_1asp_2. The theoretical gain would not, however, be fully realized in practice, owing to greater loss by cylinder condensation with an early cut-off.

A similar result is seen by diagrams Figs. 149 and 150, which

VARIABLE CUT-OFF IN H.P. CYLINDER.
CONSTANT „ L.P. „

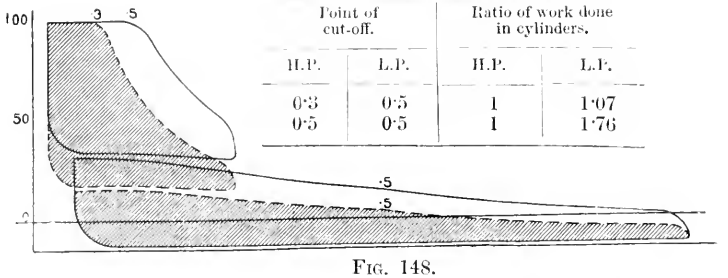

Point of cut-off.		Ratio of work done in cylinders.	
H.P.	L.P.	H.P.	L.P.
0·3	0·5	1	1·07
0·5	0·5	1	1·76

FIG. 148.

THROTTLING GOVERNING IN H.P. CYLINDER.
CONDENSING.

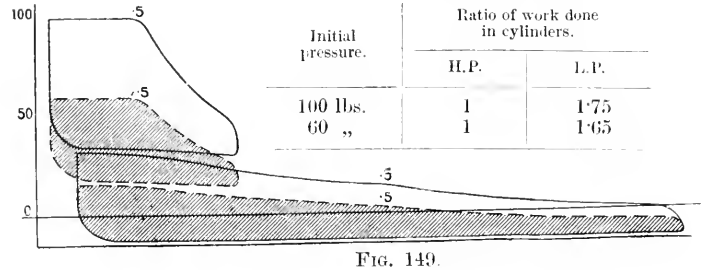

Initial pressure.	Ratio of work done in cylinders.	
	H.P.	L.P.
100 lbs.	1	1·75
60 „	1	1·65

FIG. 149.

NON-CONDENSING. THROTTLING.

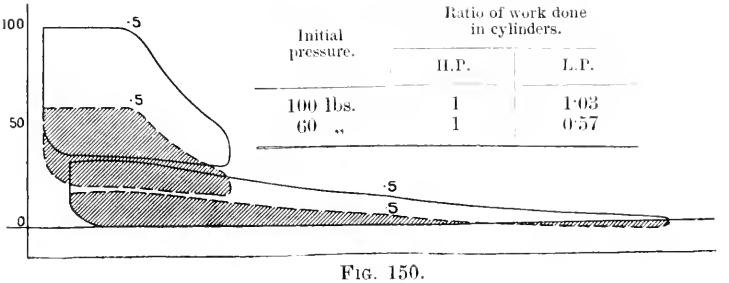

Initial pressure.	Ratio of work done in cylinders.	
	H.P.	L.P.
100 lbs.	1	1·03
60 „	1	0·57

FIG. 150.

CONSTANT CUT-OFF IN H.P. CYLINDER.
VARIABLE „ L.P. „

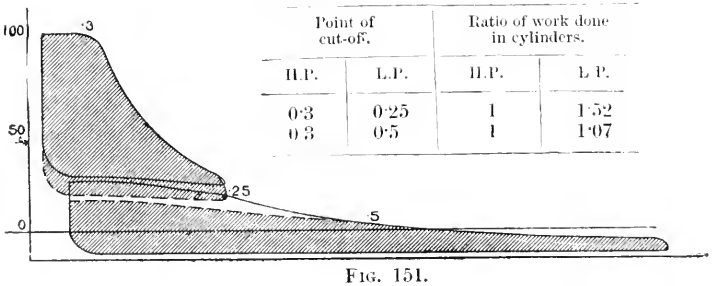

Point of cut-off.		Ratio of work done in cylinders.	
H.P.	L.P.	H.P.	L.P.
0·3	0·25	1	1·52
0·3	0·5	1	1·07

FIG. 151.

show the effect of throttling. Fig. 149 is for a condensing engine, and Fig. 150 for a non-condensing engine. The dotted shaded areas show the work areas when the initial pressure has been reduced by throttling the steam-supply to the high-pressure cylinder. The full-line figures show the effect on the distribution of the power before the initial pressure was reduced by throttling.

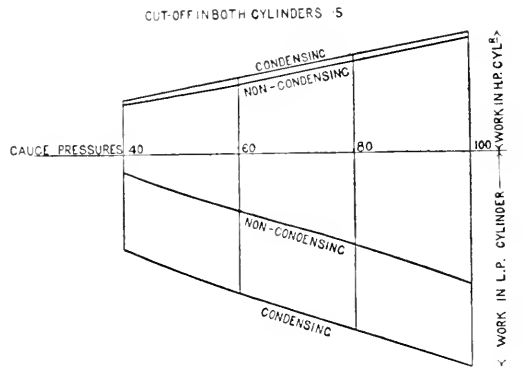

Fig. 152.

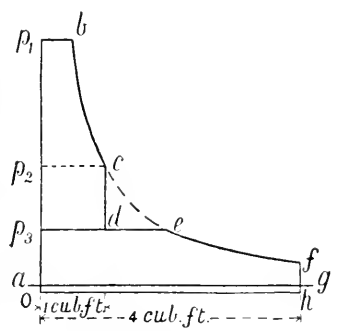

Fig. 153.

Fig. 152 shows the effect on the distribution of the power between the cylinders, of throttling the initial steam between the ranges of 100 and 40 lbs. pressure. Vertical measurements above and below the pressure line give the work done in the high and low-pressure cylinders respectively. The effect of adding a condenser is also shown.

3. *Effect of a Variable Cut-off in the Low-pressure Cylinder on the Distribution of the Power between the Cylinders.*—Unequal distribution of the power can be remedied to some extent by regulating the point of cut-off in the low-pressure cylinder. Thus, suppose the cylinder ratios = 1 : 4, and cut-off in each cylinder at half-stroke, and let p_1bcdp_3 (Fig. 153) be the work area for the high-pressure, and p_3efga the work area for the low-pressure cylinder. If now the cut-off in the low-pressure cylinder be changed from 0·5 to 0·25 of the stroke, then the work areas will be changed, the high-pressure diagram being reduced to the area p_1bcp_2, and the low-pressure diagram being increased to the area p_2cfga. Conversely, if the cut-off

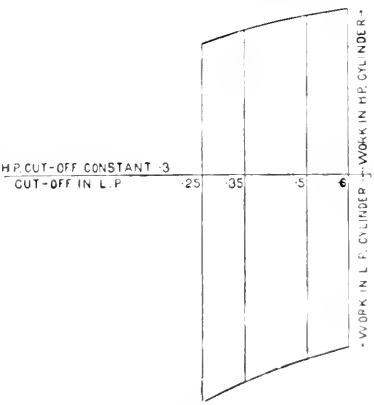

Fig. 154.

in the low-pressure is made later, the receiver-pressure line will fall, the high-pressure area will be thereby increased and the low-pressure decreased. Hence, to throw a larger share of the total work into the low-pressure cylinder, make the cut-off in that cylinder earlier, and *vice versâ*. This is also illustrated in Figs. 151 and 154. An adjustable cut-off for the low-pressure cylinders of marine engines is shown in Fig. 81.

Fig. 155 shows indicator diagrams of one set of engines of H.M.S. *Powerful*, a twin-screw cruiser.[1] The full-lined diagrams represent the power-distribution between the cylinders when the engines exerted 13,000 I.H.P., and the dotted-lined diagrams the power-distribution at 2500 I.H.P.

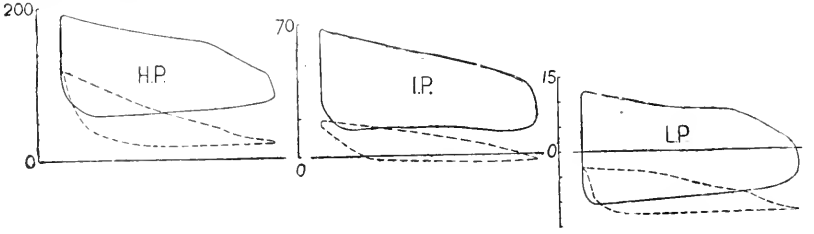

Fig. 155.

		At full power.		At low power.
Boiler pressure (lbs.)	... ...	205·0	...	190·0
Vacuum (ins.)	... ...	26·25	...	26·75
Revolutions ...	... ...	116·95	...	69·18
I.H.P. H.P.	... ...	4287·48	...	981·38
I.P.	... ...	4233·15	...	729·27
F.L.	... ...	2263·51	...	426·03
A.L.	... ...	2237·79	...	426·03
Total	... ...	13,021·93	...	2562·71

The engines are four-cylinder, triple-expansion engines, having one high-pressure cylinder, one intermediate cylinder, and two low-pressure cylinders, namely, the "forward" and the "after" low-pressure cylinder respectively. By using two low-pressure cylinders instead of one, the necessary volume is obtained without an excessively large cylinder diameter.

4. *Receiver Volume.*—If the volume of the receiver or chamber between the cylinders of compound engines (including the exhaust chamber and exhaust pipe of the first cylinder, and the valve chest of the second cylinder) were indefinitely large, then the back-pressure line of the small cylinder and the forward-pressure line of the large cylinder would each be a horizontal straight line, as shown in the approximate diagrams (Figs. 142, 144).

In practice the receiver volume is from one and a half to several

[1] Reduced from diagrams given in a paper by Sir A. J. Durston before the Institution of Naval Architects, April, 1897.

times the volume of the high-pressure cylinder; and the effect of the restricted volume of the receiver is to make the back-pressure line of the high and the admission line of the low-pressure diagram somewhat irregular.

The theoretical form of these portions of the diagrams is seen in Fig. 160, which represents the pressures in the receiver, assuming pv constant.

The receiver volume is usually made as small as possible to avoid loss of heat by radiation, but the necessities of the design determine the volume. Other things being equal, the effect on the power-distribution, of a small receiver, is to increase somewhat the back pressure against the high-pressure piston, and increase the initial pressure on the low. Increasing the volume of the receiver, therefore, increases to a small extent the area of the high-pressure diagram, and decreases the area of the low.

5. An increase of pressure sometimes occurs in the low-pressure cylinder towards the point of cut-off, shown in practice as a more or less sudden increase of pressure during admission on the low-pressure diagram, especially when the engine is running slowly. This is due to the high-pressure cylinder exhaust passing into the receiver before cut-off has taken place in the low.

Practical Modifications.—In discussing first principles of the compound engine simple approximate diagrams were used merely to illustrate the principles, but in practice numerous corrections of these assumed conditions have to be made, as will be seen by comparing diagrams Fig. 155 with the figures previously considered. The losses in practice may be summarized as follows :—

1. The loss of pressure between the pressure in the boiler and the initial pressure on the piston; the amount of the loss varies with the speed of the engine, its distance from the boiler, the design of the steam-passages and valve gear.

2. The loss due to wiredrawing during admission of the steam to the h.p. cylinder. This causes the mean admission pressure between the beginning of the stroke and the point of cut-off to be less than the initial pressure.

3. The loss due to "drop" of pressure between the end of expansion in the high-pressure cylinder and the initial pressure in the low.

4. The loss of pressure between the back pressure of one cylinder and the forward pressure of the succeeding cylinder.

5. The loss due to early opening of exhaust. This is generally very small.

6. The loss due to back pressure on the low-pressure cylinder. This may be considerable; thus, if the h.p. and l.p. piston ratios are 1 : 7, then 1 lb. additional back pressure due to defective vacuum in the condenser will be equivalent to a loss of 7 lbs. mean pressure on the h.p. piston.

7. In unjacketed cylinders, the gradual reduction of the weight of steam present as steam as the expansion proceeds by transmutation of heat into work.

For double-expansion engines, with a given fixed terminal pressure, usually 10 lbs., the number of expansions falls in practice to about 85 per cent., and in triple-expansion engines to 70 per cent., of that given by initial pressure ÷ terminal pressure.

The *diagram factor* is the ratio of the actual mean effective pressure of an engine, referred to the low-pressure cylinder, to the theoretical mean effective pressure obtained with the same number of expansions, and supposing the only losses to be the back pressure of 3 lbs. for condensing engines and 16 lbs. for non-condensing engines. The theoretical expansion curve may be assumed either adiabatic or hyperbolic; for simplicity it is usually assumed hyperbolic, and the diagram factor is found accordingly. Thus—

$$\text{Diagram factor} = \frac{\text{actual mean pressure}}{\text{theoretical mean pressure}} = \frac{p_e}{p_m} = \text{K}$$

$$\text{Actual mean pressure} = p_e = \frac{\text{I.H.P.} \times 33{,}000}{\text{LAN}}$$

referred to low-pressure cylinder, where A = area of low-pressure cylinder, and LN = piston speed in feet per minute.

$$\text{Theoretical mean pressure} = p_m = p_1 \frac{1 + \log_\epsilon \text{R}}{\text{R}} - p_b$$

where R = (volume of piston displacement of l.p. cylinder plus clearance) ÷ (volume of steam at cut-off in h.p. cylinder).

Diagram Factors for Compound Engines

High speed, short stroke, unjacketed	60 to 80 per cent.
Slower rotational speeds „	70 „ 85 „
„ „ jacketed	85 „ 90 „
Corliss valve gear jacketed	90 „
Triple-expansion marine engines (Seaton) ...	60 „ 66 „

Mean Effective Pressure referred to Low-pressure Piston.—In multiple expansion engines it is convenient for many purposes to express the sum of the mean effective pressures on the various pistons in terms of an equivalent mean pressure reduced to a common scale of piston area, and for this purpose the low-pressure piston area is chosen as the standard. The sum of the equivalent pressures is then spoken of as the total mean effective pressure "referred to the low-pressure piston."

Thus, in the case of a triple-expansion engine having piston areas in the proportion 1 : 2·7 : 7, and mean effective pressures in the proportions 91, 33·8, and 13 respectively; reducing these to the common scale of the low-pressure piston area, we have :—

M.E.P. in high-pressure cylinder referred to low-pressure cylinder.	M.E.P. in inter-cylinder referred to low-pressure cylinder.	M.E.P. in low-pressure cylinder.	Total M.E.P. referred to low-pressure cylinder.
$91 \times \frac{1}{7}$	$33{\cdot}8 \times \frac{2{\cdot}7}{7}$	13	
13	13	13	39

To find the Sizes of the Cylinders for a Compound Engine of given Power.—It is usual first to determine the diameter of the low-pressure piston by considering that its capacity will be the same as would be the case if the total work of the engine is to be done in that cylinder alone. For whatever the number of cylinders which precede the low-pressure cylinder, this cylinder must itself be large enough to contain each stroke the volume and weight of steam necessary to develop the specified power with a given terminal pressure. In other words, the total steam used by a compound engine is the steam exhausted from the low-pressure cylinder.

The final volume and weight of steam used are the same, whether the expansions all occurred in the low-pressure cylinder by having an early cut-off in that cylinder, or whether they occurred in a series of preceding cylinders exhausting finally to the low-pressure cylinder and expanding there to the same terminal pressure.

The area (A) of the low-pressure piston for a given total power of the combined cylinders, and with a given stroke, is determined from the formula—

$$\frac{(P \times A) \times (L \times N)}{33000} = \text{total I.H.P.}$$

where P = mean effective pressure referred to low-pressure piston
= 40 to 45 lbs. per sq. in. at *maximum* load ; or
= 30 to 35 lbs. per sq. in. at *most economical* steam consumption.

The higher values of P are taken at the higher boiler-pressures.

EXAMPLE.—Find the diameter of the low-pressure cylinder of a compound vertical engine for a maximum load of 400 I.H.P. ; stroke 18 ins. ; revolutions per minute, 155 ; mean effective pressure referred to low-pressure piston = 40 lbs. per sq. in.

$$A = \frac{\text{I.H.P.} \times 33000}{P \times L \times N} = \frac{400 \times 33000}{40 \times 1{\cdot}5 \times 155 \times 2}$$
$$= 709{\cdot}6 \text{ sq. ins.}$$
$$= 30 \text{ ins. diameter.}$$

To find the Diameter of the High-pressure Cylinder.—Having determined the dimensions of the low-pressure cylinder, the diameter of the high-pressure cylinder will depend upon a number of conditions, but the chief object usually is to provide that the power of the engine shall be divided equally between the cylinders, and that the maximum stresses on the piston shall be as nearly as possible equal. So far as the power of the engine is concerned, provided the low-pressure cylinder is correctly designed, the total power will be on the whole independent of the ratio of the cylinders, though the smooth and economical working of the engine may be much influenced by it. The following tables give the proportions usually adopted. Then, allowing a ratio of $3\frac{1}{2}$ to 1 from the table, area of high-pressure piston = $706{\cdot}5 \div 3{\cdot}5 = 201{\cdot}86$ sq. ins. = 16 ins. diameter.

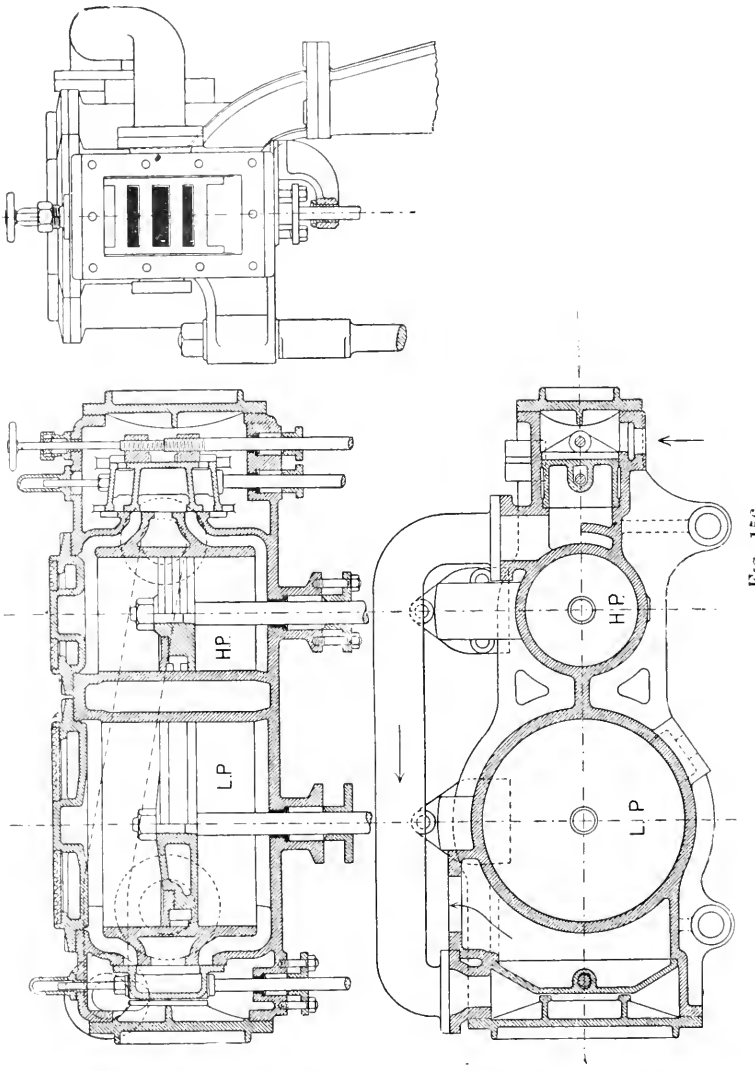

FIG. 156.

DOUBLE-EXPANSION COMPOUND ENGINES.

Condensing.

Boiler pressure ... ... lbs.	80	90	100	120
Ratio of L.P. to H.P. volumes ...	3	$3\frac{1}{4}$	$3\frac{1}{2}$	4

Non-condensing.

Boiler pressure ... . lbs.	90–100	120
Ratio of L.P. to H.P. volumes	$2\frac{1}{4}$	$3\frac{1}{4}$

LOCOMOTIVE COMPOUNDS (VON BORRIES).

	Ratio of L.P. to H.P. vols.
Large locomotives with tenders	2 to 2·05
Tank locomotives	2·15 to 2·2

TRIPLE-EXPANSION ENGINES (HORIZONTAL).

Boiler-pressure.	H.P. vol.	I.P. vol.	L.P. vol.
140	1	$2\frac{1}{4}$	$6\frac{1}{2}$
160	1	$2\frac{5}{8}$	7
180	1	$2\frac{1}{2}$	$7\frac{1}{2}$

Marine engineers adopt the ratio for cylinder diameters of triple-expansion engines of about 3, 5, and 8 respectively. Then the areas of the successive pistons are to one another as $3^2 : 5^2 : 8^2 = 1 : 2{\cdot}78 : 7{\cdot}11$. The diagram (Fig. 157) illustrates the way in which the ratios between the cylinder diameters increase as the initial pressures increase, for triple-expansion condensing engines, the respective cylinder diameters being measured horizontally, from zero for each cylinder on the horizontal line drawn through the required boiler pressure.

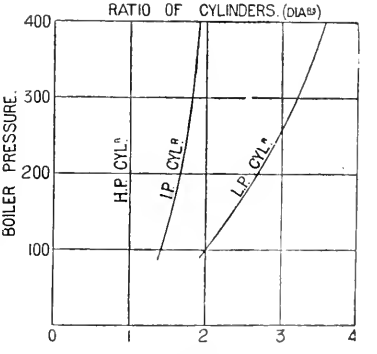

FIG. 157.

Effects of Various Portions of Work Area on Condensation in Multiple-Expansion Engines.—Consider the case of a triple-expansion

engine having high-pressure, intermediate, and low-pressure cylinders. Then, referring to Fig. 158—

1. Work done upon high-pressure piston up to cut-off $= a_1 + a_2 + a_3$. This work is done by the external latent heat of the steam provided at the boiler, and is not followed by condensation due to the work done.

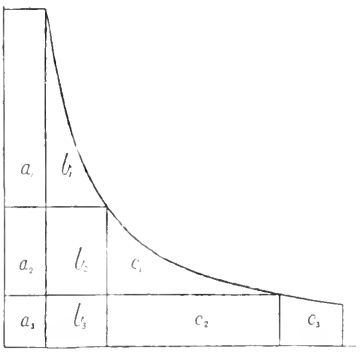

FIG. 158.

2. Work done in high-pressure cylinder after cut-off $= b_1 + b_2 + b_3$. Heat-units converted into work $=$ (area $b_1 + b_2 + b_3$) $\div$ 778. This loss of heat, due to work done, is followed by equivalent condensation, and the steam is made permanently wet to this extent throughout.

3. Work done against high-pressure piston $= (a_2 + b_2 + a_3 + b_3) =$ work done upon intermediate-pressure piston up to cut-off. Net work done by steam $= 0$. No condensation due to work done.

4. Work done by steam during expansion in I.P. cylinder $= c_1 + c_2$. Heat-units converted into work $=$ (area $c_1 + c_2$) $\div$ 778. This is followed by an equivalent condensation of steam, increasing permanent wetness.

5. Work done against I.P. piston $=$ work done upon L.P. piston $= (a_3 + b_3 + c_2)$. Net work done by steam $= 0$. No condensation.

6. Work done by steam during expansion in L.P. cylinder $= c_3$. Heat-units converted into work $=$ (area c_3) $\div$ 778, with equivalent condensation, producing permanent wetness.

Diagram of Relative Piston Displacement in Compound Engines.—Having given the ratios of cylinders and clearance and receiver volumes for a given compound engine, it is possible to follow the steam through the engine, and to construct diagrams representing the nature of the changes of volume and pressure between the points of entering and leaving the cylinder.

In Fig. 159, horizontal lines are lines of volume, and vertical lines are subdivided into portions of a revolution. Thus, starting at a on the top line, let aO = volume of high-pressure clearance (c_h); O5 = volume of high-pressure piston displacement (r_h); ab = volume of receiver (R); $b5'$ = volume of low-pressure clearance (c_l); and $5'O'$ = volume of low-pressure piston displacement.

On the lines O5 and O'5' draw semicircles representing a half-revolution of the crank-pin, and divide it into any number of equal parts—say five, as shown. On the vertical line to the left of the figure set off ten equal spaces representing parts of a revolution. The diagram is completed for one and a half revolution. The cranks being supposed at right angles, when the h.p. piston is at beginning of stroke O the l.p. piston is at half-stroke K. A curve is now drawn

for each cylinder, called the "curve of piston displacement," through the points of intersection of the horizontals from the divisions on the line of revolution, and of the verticals from the corresponding

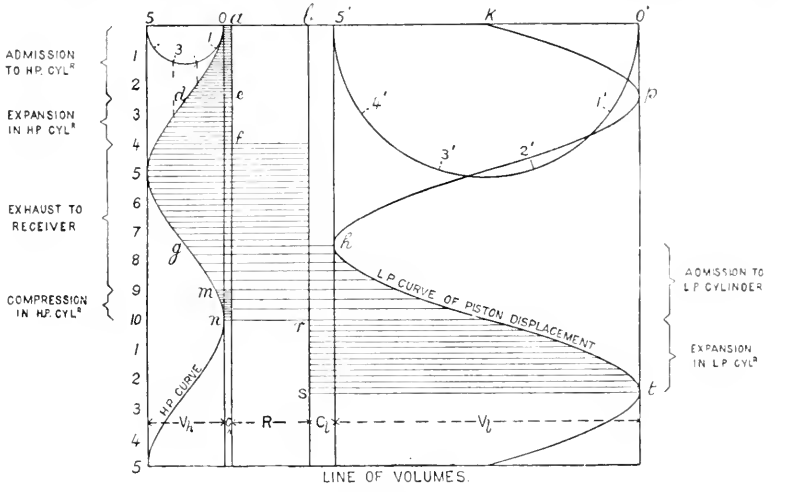

FIG. 159.

numbers on the crank-pin circles. This curve gives, by horizontal measurements to it, as shown by the shade lines, the volume of steam in the h.p. cylinder, including clearance for any position of the piston, before exhaust. After exhaust, it gives the volume of the steam on the exhaust side of the piston, and including the receiver volume; and finally, when both cylinders are in communication, the horizontal distance between the lines gives the volume of the steam for any relative position of the pistons, the displacement curves having been drawn so that the cranks have the required relative position with one another. In the case chosen, when the high-pressure piston is at the end of the stroke, as at O, the low-pressure piston is at half-stroke, as at K.

We may now follow the varying volume of the steam in its passage through the compound engine. First, the high-pressure clearance aO is filled with steam at initial pressure, and the steam is continued to point of cut-off at half-stroke in high-pressure cylinder, and volume in cylinder $= de$. The steam is then expanded till nearly the end of the stroke, when the exhaust port opens, and at f the steam passes into the receiver. The exhaust side of the high-pressure piston and the receiver are in communication, as shown by the ruled lines, until the low-pressure steam port opens at h. Here the volume of the steam $= gh$. At m the high-pressure exhaust port is closed, and compression begins. At half-stroke of the low-pressure piston, namely at r, cut-off takes place, and the steam finally expands to volume st.

The application of the diagram (Fig. 159) to the consideration of the indicator diagrams of compound engines is shown in Fig. 160. This figure shows, as before, the piston-displacement curves for

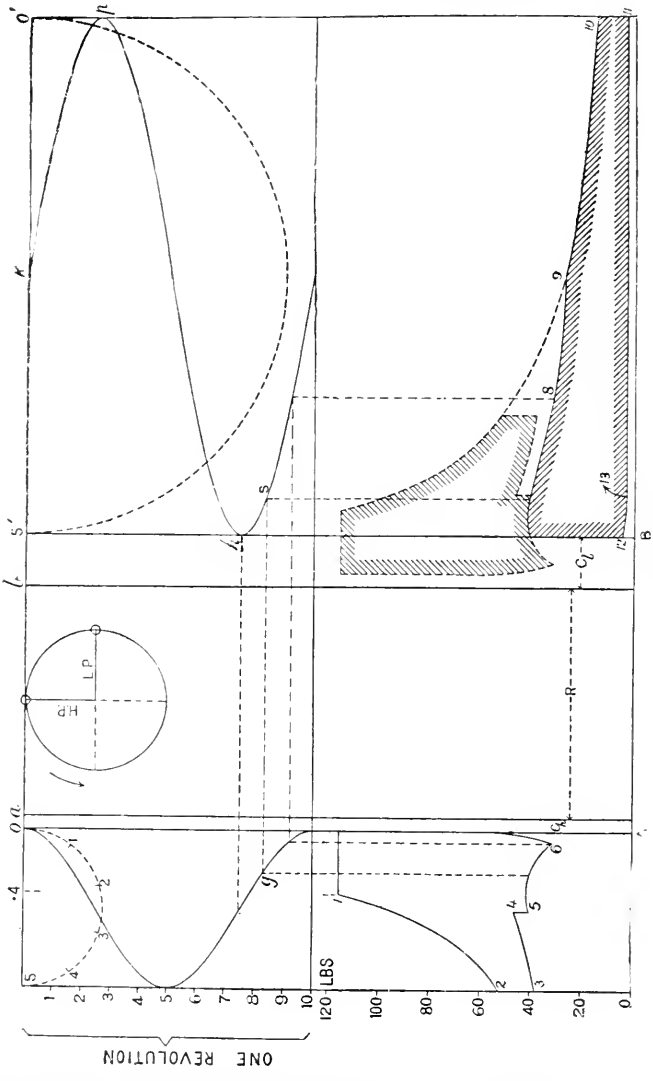

Fig. 160.

cranks at right angles, the theoretical indicator diagram of the high-pressure cylinder being drawn below the high-pressure piston curve, and the low-pressure indicator diagram below the low-pressure curve.

The initial pressure, being known, is set up from the zero line of pressure. In the diagram, cut-off takes place at 0·4 of the stroke in the high-pressure cylinder, and the initial pv being known, all other points in the cycle may be determined, assuming hyperbolic expansion, as follows :—

In the equations, the subscript figures refer to corresponding figures on the portions of the figure representing the theoretical indicator diagram. Thus v_3 = volume of steam at point 3, measured from beginning of stroke—that is, from vertical line AO and to the left in the high-pressure diagram, and from vertical line through B and to the right in the low-pressure diagram. When the exhaust side of the high-pressure cylinder is in communication with the low-pressure cylinder, then the volume, including that of the receiver, is given by the horizontal intercept between the lines of piston displacement.

Since, for the purpose of this diagram, it may be assumed that pv = a constant—

$$p_1(v_1 + c_h) = p_{10}(v_{10} + c_l) \quad . \quad . \quad . \quad . \quad . \quad . \quad (1)$$

from which the terminal pressure is obtained. And the point of cut-off in the low-pressure cylinder being known, then—

$$p_9(v_9 + c_l) = p_{10}(v_{10} + c_l) \quad . \quad . \quad . \quad . \quad . \quad (2)$$

From which p_9, or the pressure at cut-off in the low-pressure cylinder, and therefore also the pressure in the receiver at that time, is known.

Then the pressures at all other points may be obtained by the following equations :—

Referring to the theoretical indicator diagrams in the lower part of Fig. 160, then for the high-pressure cylinder—

$$p_1(v_1 + c_h) = p_2(v_2 + c_h) \quad . \quad . \quad . \quad . \quad . \quad . \quad (3)$$

At point 2 the steam exhausts and mixes with that in the receiver, which is at some pressure p_9 previously calculated.

$$p_2(v_2 + c_h) + p_9\mathrm{R} = p_3(v_3 + c_h + \mathrm{R}) \quad . \quad . \quad . \quad . \quad (4)$$

But during the return of the high-pressure piston, so long as the low-pressure cylinder is not open to receive steam, the volume enclosed is for the moment reduced, hence the pressure rises to p_4 until the low-pressure valve opens the port to steam, when the pressure instantly falls to p_5.

$$p_3(v_3 + c_h + \mathrm{R}) = p_4(v_4 + c_h + \mathrm{R}) \quad . \quad . \quad . \quad . \quad (5)$$

When the low-pressure valve opens to steam, the receiver steam mixes with that in the clearance space of the low-pressure cylinder : thus—

$$p_4(v_4 + c_h + \mathrm{R}) + p_{12}c_l = p_5(v_5 + c_h + \mathrm{R} + c_l) \quad . \quad . \quad (6)$$

This action continues, and meanwhile the low-pressure piston is moving forward and increases the displacement, causing the pressure to fall to p_6, when the high-pressure exhaust-valve closes, and compression begins in the high-pressure cylinder ; then—

$$p_5(v_5 + c_h + \mathrm{R} + c_l) = p_6(v_6 + c_h + \mathrm{R} + c_l + v_5) \quad . \quad (7)$$

where e_s is the volume displaced by the low-pressure piston from the beginning of its stroke, and which volume may be measured by the horizontal intercepted between the lines of piston displacement, as shown by the dotted projectors.

The back pressure p_{11} in the low-pressure cylinder is fixed—

$$(p_{12}e_l) = p_{11}(e_{13} + e_l) \quad . \quad . \quad . \quad . \quad . \quad (8)$$

The same principles may be further extended to represent the changes in any number of cylinders by taking two at a time.

Over the low-pressure diagram the high-pressure diagram is shown dotted. It has been transferred from the opposite side of the figure to show more clearly the relation between the diagrams.

To combine Indicator Diagrams of Compound Engines (Fig. 161).—This is a method of constructing the diagrams to a common scale of

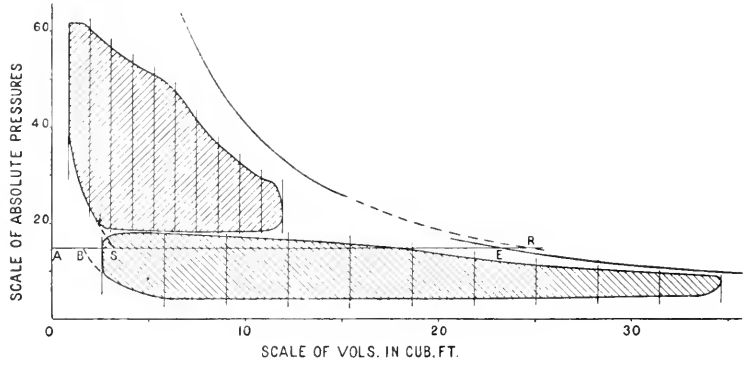

FIG. 161.

volumes and pressures for the purpose of showing the relative work areas to a uniform scale, and of seeing where the losses occur which are peculiar to compound engines.

The original indicator diagrams for each cylinder are first divided into ten equal parts, as in the ordinary way, and the clearance line and saturation curve are drawn on the original diagrams by the method already described (p. 116).

Then taking a length of, say, about 12 in. for the length of the low-pressure diagram, set off on a horizontal line—which may serve as the scale of volumes and as the absolute zero line of the pressure,—a distance so that the length of the low-pressure diagram represents, to the scale chosen, the piston displacement of the low-pressure cylinder.

To the same scale set back the clearance volume AS of the low-pressure cylinder. Through point A raise a perpendicular line, which is called the clearance line, or the zero line of volumes, and from this zero mark off the scale of volumes as shown in Fig. 161. This scale is the scale of all volumes measured on the diagram.

The common scale of pressures chosen may be that of the original low-pressure indicator diagram, or some multiple, say 1·5 of that scale. Then first, to complete the extended low-pressure diagram, divide the length chosen for this diagram into the same number of divisions (namely ten) as marked on the original indicator diagram, and set up to the scale chosen on the respective division lines of the enlarged diagram, the absolute forward and backward pressures given at the corresponding divisions of the original diagram. These points, when joined up by a free curve, will be a reproduction to an extended scale of the original indicator diagram.

To reproduce the high-pressure diagram to the new scales, set off the clearance volume and piston displacement of the high-pressure cylinder to the same scale of volume as used for the low-pressure cylinder, and divide the piston displacement into ten equal parts. Then transfer to these division lines the absolute forward and back pressure given at the corresponding division lines of the original high-pressure indicator diagram. The original indicator diagrams should first be measured with the scale of the spring used in taking the diagram, and the actual absolute forward and back pressures marked upon them, so that these numbers can be transferred at once to the combined diagram with the enlarged scale of pressures.

If the scale of the original low-pressure diagram is $\frac{1}{12}$, and that of the high-pressure diagram $\frac{1}{40}$, then, if the scale of pressures chosen for the combined diagram is $\frac{1}{10}$, the vertical dimensions of the diagrams on the enlarged scale will be $\frac{12}{10}$ of the original scale of pressures for the low-pressure cylinder, and $\frac{40}{10}$ of the original scale for the high-pressure cylinder.

The saturation curve is transferred from the original diagram to the combined diagram in each case, by the method of "dry steam fraction."

It is probable that the saturation curve of the respective cylinders will not coincide—that is, will not be continuous. This could only occur if the same weight of cushion steam was retained in each cylinder. Generally the weight of cushion steam is less in the lower-pressure cylinders, and therefore the saturation curve of the first cylinder falls outside that of the second cylinder.

In each cylinder we have during expansion the weight of steam supplied from the boiler per stroke, called the "cylinder feed," and the steam retained in the clearance space at compression. In the diagram (Fig. 161) the compression curve of the low-pressure diagram is carried up by a dotted line to any horizontal line, in this case the atmospheric line, and the compression curve of the high-pressure diagram is brought down to the same line. Then AB = weight of cushion steam in the low-pressure cylinder, and AS = weight of cushion steam in the high-pressure cylinder; also SR = BE = "cylinder feed" per stroke.

CHAPTER VIII.

SUPERHEATED STEAM.

THE temperature of saturated steam depends upon its pressure. If heat be taken from it, some of the steam is condensed, but the temperature of what remains is unchanged so long as the pressure is unchanged.

If heat be added to the steam when it is not in contact with water, its temperature will be raised above that due to its pressure ; in other words, it will be *superheated.*

The temperature of saturated steam in the presence of water cannot be raised without raising its pressure. On the other hand, steam may be superheated without raising its pressure if the steam be permitted to expand as the heat is added. If steam were superheated in a closed chamber where no expansion is possible, then the pressure would increase with the temperature, as in the case of any ordinary gas. But in practice the steam is used in the engine as fast as it is generated, and the displacement of the piston is practically an indefinite extension of the volume of the steam space of the boiler.

Hence the effect of superheating the steam which passes through the superheater at constant pressure is to increase its volume per pound at the given pressure, the increase of volume being assumed—in the present state of our knowledge of the subject—to be proportional to the increase of its absolute temperature.

Superheated Steam previously used and afterwards abandoned.—In 1859, in a paper read before the Institution of Mechanical Engineers on superheated steam, by Mr. John Penn,[1] several cases were referred to in which superheated steam was then being used successfully, and for some ten years afterwards superheaters were frequently applied, especially in marine work.

In 1860 particulars were given [1] of Parson and Pilgrim's method of superheating, as carried out on the boilers of passenger steamers then running on the Thames. This method consisted of cast-iron pipes placed in the fire-grate, and showed that even in those days the importance was appreciated of placing the superheater near the furnace, and not merely in the uptake, to be heated by waste gases, as was the case generally in the marine practice of that time.

But at an early period in the history of superheating, it was found generally that if superheating was carried beyond about from 400° to 500° Fahr., trouble was liable to occur in the form of scored cylinders and valve faces, the cause of which was probably due to

[1] *Proc. Inst. Mech. Engineers*, 1859 and 1860.

defective lubrication. The tallow, which was the lubricant of that time, decomposed at temperatures lower than that of the steam in the valve-chest, and the charred residue was worse than useless for the purpose for which it was intended.

It was also found that the superheater tubes were sometimes burnt out, owing probably to a solid deposit on the inside of the superheater tubes through the use of salt feed-water. This was before the days of the surface condenser.

Considerable attention had also been given to superheating from an early period by the Alsatian engineers, and in 1857 Mr. Hirn issued a report of trials and experiments made by him on the value of superheating, which showed that a large gain might be expected from the use of superheated steam. The boiler pressure used by him was 55 lbs., and with steam superheated from 410° to 490° Fahr. he obtained economies of from 20 to 47 per cent.

Superheaters continued to be used, more or less, down to about 1870, after which they were rapidly abandoned.

The abandonment of superheating was probably due to the introduction, about that time, of steam of higher pressures and higher normal temperatures, accompanied by the rapid introduction of the compound engine, as it was found that by these means the economy obtainable by superheating might be more easily secured, and with fewer mechanical difficulties. Accordingly engineers devoted themselves to increasing the range of steam-pressures, and to the development of multiple-expansion engines. But with saturated steam the limit of efficiency is now nearly reached; and engineers are once more reverting to superheating, in which direction a large advance on present-day efficiency may be expected, and, in fact, is now being obtained.

The *specific heat* of superheated steam at constant pressure, according to Regnault, = 0·4805, and at constant volume = 0·346.

The *total heat* (H_s) of superheated steam is the heat required to raise the temperature of 1 lb. of water at 32° Fahr. to the boiling-point (t_1) due to the pressure (p_1); then to convert it into saturated steam at the same pressure; and finally to superheat the steam to some temperature t_s while the pressure p_1 remains constant. Then—

$$H_s = H_1 + 0{\cdot}48\ (t_s - t_1)$$

where H_1 = the total heat of saturated steam at pressure p_1.

Temperature-Entropy Diagram for Superheated Steam.—In Fig. 162, let aABfc represent, by an area in heat-units, the heat required to generate 1 lb. of saturated steam at temperature T_1. The method of constructing this diagram is explained on p. 42.

If now this steam be superheated to some temperature T_s, the additional heat required = $Q_s = 0{\cdot}48(T_s - T_1)$, and the area representing the superheat is drawn by setting off first the entropy cd of the superheated steam on the scale of entropy, making $cd = 0{\cdot}48(\log_e T_s - \log_e T_1)$; and from d raising a perpendicular dT_s to a height T_s equal to the absolute temperature of the superheat. The line $f\,T_s$ is a line

of constant pressure, and with the scale usually adopted is very nearly straight for small ranges of temperature. For a large range points may be found for intermediate temperatures, and a free curve drawn through them. Then the total heat required to generate 1 lb. of superheated steam from water at temperature T_2 to steam at T_1, and then to superheat it to T_s, is represented by the area $aT_2T_1fT_s da$.

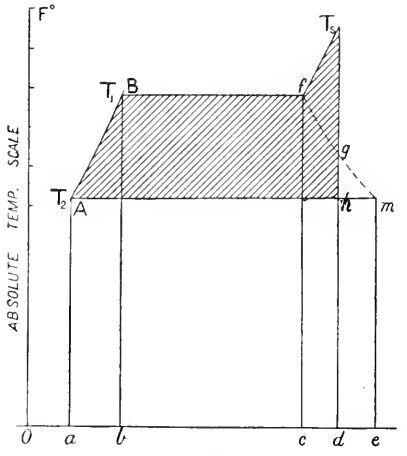

FIG. 162.

If the steam expands adiabatically from T_s to T_2, then the work done by the 1 lb. of superheated steam, if there were no losses, is represented by the area $T_2T_1fT_shT_2$.

When the pressure of the superheated steam has fallen by expansion to g, namely, where the saturated-steam line fm is cut by the adiabatic line T_sd, the temperature has now fallen to that of saturated steam, and the steam at this point g is dry, but is no longer superheated. If the expansion is continued, the steam now becomes wet, and at h the weight of moisture present = $(hm \div T_2m)$ lb.

To find the value of the dryness fraction $x_2 = T_2h \div T_2m$, we have—

$$\frac{x_2L_2}{T_2} + \phi_2 = \frac{L_1}{T_1} + \phi_1 + 0{\cdot}48 \log_e \frac{T}{T_1}$$

from which x_2 may be obtained, where ϕ_1 and ϕ_2 = entropy of water at T_1 and T_2 respectively (see Entropy Tables in Appendix). From Fig. 162, these values are represented by—

$$ad + oa = bc + ob + cd$$

The *efficiency* of that portion of the heat added as superheat, apart from its practical effect in reducing cylinder condensation, may be seen by considering the somewhat exaggerated temperature - entropy diagram, Fig. 163.

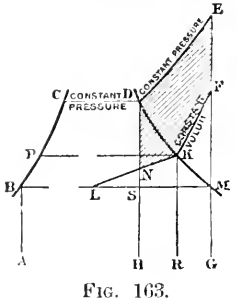

FIG. 163.

Let ABCDH represent the heat contained in 1 lb. of saturated steam at pressure and temperature C, and let HDEG represent the heat added as superheat. Then, if the superheated steam in the cylinder be expanded down to back pressure BM, the steam at release would be dry saturated steam without any superheat, and the efficiency of the superheat = SDEM ÷ HDEG.

For the case where steam is superheated at release, if the steam

in the cylinder at some high temperature, E, is expanded along the adiabatic line EG to some lower pressure, F (at which, however, the steam is still superheated), then, if release takes place, the superheated steam will follow the constant-volume lines FKKL till it falls to the back-pressure line BL. The efficiency of the superheat is NDEFKN ÷ HDEG, and the loss due to release taking place before the whole of its superheat had been used is SNKFMS. The heat-equivalent of these areas can be measured from the temperature-entropy chart in heat-units.

The constant-volume curve from K is drawn by taking the specific heat of steam at constant volume 0·346 and drawing the curve KF as DE was drawn for constant pressure, substituting 0·346 for 0·48.

It will be evident from this diagram that no important gain can be theoretically expected from superheating.

Superheating and Evaporating Surface.—Heat employed to superheat the steam increases the number of units of heat carried to the engine per pound of steam supplied. Also the heat available for evaporation of water is reduced by the amount employed in superheating the steam. Thus, suppose 10 per cent. of the heat from the furnace gases employed in superheating the steam, instead of evaporating water on an extended heating surface of the boiler. The effect will be 10 per cent. less water evaporated per pound of coal burnt, and the steam generated will carry away to the engine 10 per cent. additional heat as superheat. Considering the boiler and superheater as one plant, the efficiency of this plant is unchanged, provided the temperature and quality of the chimney gases is the same in both cases; the heat supplied by the coal having been actually taken up in some form by the working fluid, whether to evaporate water or to superheat steam is immaterial from the point of view of the efficiency of the steam generator.

The effect, however, on the efficiency of the steam as a working fluid is very marked, as will be shown.

Temperature of Superheat required to maintain the Steam dry up to Cut-off.—From experiments made by the author on the behaviour of superheated steam in a small Schmidt-engine cylinder, it appears that the amount of superheat necessary to reduce the initial condensation up to cut-off by any required amount is given approximately by the following rule:[1] namely, that for each 1 per cent. of wetness at cut-off, 7·5° Fahr. of superheat must be present in the steam on admission to the engine to render the steam dry at cut-off. (A rise of 7·5° Fahr. will be equal to 7·5 × 0·48 = 3·6 thermal units.)

For example, suppose, in a simple engine, when using saturated steam, 25 per cent. of the steam is condensed up to cut-off, and it is required to find how much superheat is necessary to secure *dry* steam in the cylinder at cut-off. Then, by the rule, since 1 per cent. of wetness requires 7·5° Fahr. of superheat, 25 per cent of wetness will

[1] Deduced by Mr. Michael Longridge from the author's experiments. See the discussion on the author's paper on "Superheated Steam Engine Trials," *Proc. Inst. C.E.*, vol. cxxviii.

require $7{\cdot}5 \times 25 = 187{\cdot}5°$ Fahr. of superheat = $(187{\cdot}5 \times 0{\cdot}48) = 90$ thermal units per pound of steam.

These figures apply only to the experiments above referred to, and they will, of course, be subject to some modification for the numerous types of engines and variable conditions occurring in practice.

In such an engine as the one above described, only 75 per cent. of the steam is engaged in the performance of useful work. The heat supplied per pound of saturated steam would be approximately 1000 units from temperature of feed-water, and the efficiency of the heat about 10 per cent.; that is, 100 thermal units are converted into work for 1000 units supplied.

But by the addition of 90 thermal units as superheat, the whole of the 1 lb. of steam is present as dry steam in the cylinder at cut-off, and the useful work done is increased approximately in the proportion of from 75 to 100, or a gain of 33·3 per cent. That is, we now have 133·3 units of heat converted into work for an expenditure of 1090 units; or an efficiency of $133{\cdot}3 \div 1090 \times 100 = 12{\cdot}23$ per cent., as against 10 per cent. without superheat. This shows a very large efficiency for that portion of the heat used to superheat, namely, $33{\cdot}3 \div 90 \times 100 = 37$ per cent.

Using the same numerical example, it may be seen, also, how superheating reduces the extent of the heat-exchange between the steam and the cylinder-walls; for since 7·5° of superheat per pound of steam prevents 1 per cent. of initial condensation, we have $7{\cdot}5 \times 0{\cdot}48 = 3{\cdot}6$ heat-units absorbed by the walls, instead of 1 per cent. of the latent heat of the initial steam, which for steam at 100 lbs. pressure = $883{\cdot}3 \times 1 \div 100 = 8{\cdot}83$ heat-units, or 2·45 times as much heat. When the superheat is sufficient to maintain the steam dry at *release*, the heat-exchange is still further reduced.

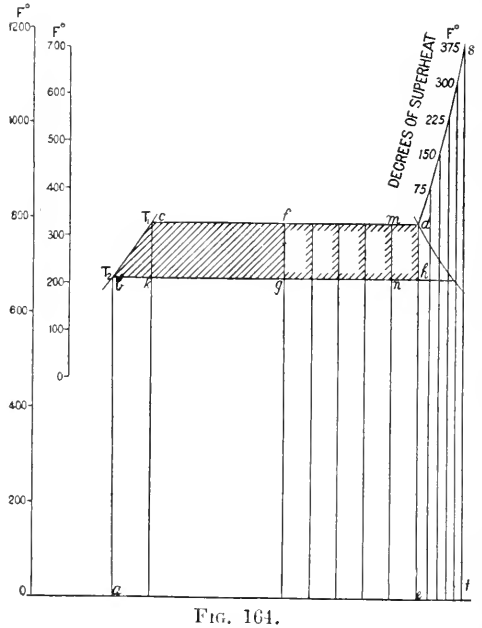

FIG. 164.

The same effects may be shown graphically by the aid of Fig. 164. Thus, suppose dry saturated steam supplied to an engine, and that the condensation at cut-off was 50 per cent. Then area *abcde* = heat supplied per pound of

steam; and the work area, when the steam is expanded down to exhaust pressure, = shaded area *cfgb*. The loss of work due to condensation = area *fdhg*.

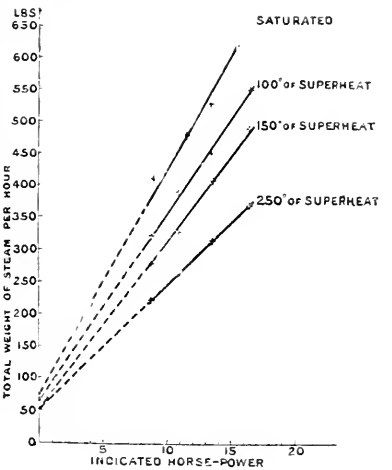

FIG. 165.

To prevent this loss by means of superheating, by the rule given above, for every 75° of superheat added to the steam, wetness at cut-off is reduced 10 per cent., and the work area *cfgb* is gradually extended towards the right as more and more superheat is added, until with 375° of superheat (= 7·5 × 50) the steam is dry at cut-off, and the whole area *cdhb* is now available as useful work.

That is, in order to obtain the work area *cfgb* with saturated steam, the heat-units expended = area *abcde*, and the efficiency = *cfgb* ÷ *abcde*; but by the addition of the much smaller area *edst* heat-units as superheat, the work area is nearly doubled, and the efficiency is now *cdhb* ÷ *abcdst*. Hence the economy of heat employed as superheat.

The numerical values of these areas should be plotted for actual examples on the chart, Plate I., and measured by the student with a planimeter.

The effect on steam-consumption of gradually increasing amounts of superheat is well seen by Fig. 165, illustrating the steam-consumption with a small single-acting Schmidt motor, having a pair of 7-in. cylinders, stroke 11·8 in., running at 180 revolutions per minute, and supplied with steam with varying degrees of superheat.

According to the rule above stated, engines of the best types having a minimum loss by initial condensation will require steam less highly superheated than engines of an inferior type having a larger loss by initial condensation.

To obtain dry steam at *release*, the steam at cut-off will be more or less superheated (see Fig. 167), and this condition of things requires a further amount of superheat of from 50° to 100°, depending on the number of expansions, being greater as the expansions increase. It is also necessary to superheat the steam in the superheater to a higher degree than is required at the engine, because of the loss of heat which occurs in the passage from one to the other. This loss depends upon the length of piping and upon the quality and amount of the non-conducting lagging employed.

Reasons of Gain by Superheating.—The object of superheating is to secure dry steam in the cylinder, and the actual gain in practice which follows the use of superheated steam is due to the more or less

complete removal of the loss by cylinder condensation; for when the working fluid is saturated steam, no transfer of heat, however small in amount, can take place from the steam to the metal without accompanying deposition of water in the cylinder, which, during the exhaust stroke, is evaporated at the expense of the heat of the cylinder-walls.

The result is, that the mean temperature of the cylinder-walls with saturated steam is much below that of the steam on entering the cylinder. On the other hand, when the steam is sufficiently highly superheated it is in a far more stable condition than before the superheat was added, and can part with the whole of its superheat to the cylinder-walls without undergoing any liquefaction.

The drier the steam at cut-off, the more work is done per pound of steam passing through the cylinder. The drier the steam at release, the less demand upon the cylinder-walls during exhaust for heat of re-evaporation, and the higher the mean temperature of the cylinder-walls. A dry cylinder at release parts with little heat to the comparatively non-conducting medium passing away during exhaust, hence the smallness of the heat-exchange between the steam and the cylinder-walls under such conditions.

Superheating thus removes the principal source of loss of heat by the walls, namely, water in the cylinder at release, and reduces also the amount of the heat-exchange between the steam and the walls to a minimum.[1]

Effect of Superheat upon Heat-exchange in the Cylinder.—By the aid of the method described as Hirn's analysis on p. 120, it

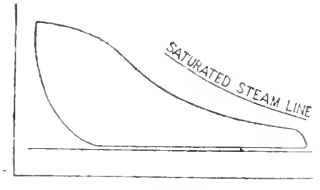

FIG. 166.—Wet steam throughout expansion.

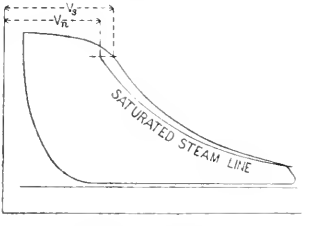

FIG. 167.—Superheated steam throughout expansion.

is possible to show by areas the effect of superheat in reducing the extent of the heat-exchange between the steam and the cylinder-walls in any actual case.

The method consists in finding the heat missing from the steam at cut-off, due to absorption of the heat by the cylinder-walls, and representing the same by a rectangular area drawn to the same scale of heat-units[2] as the indicator diagram (see Figs. 168 to 170).

The heat missing at cut-off = (total heat supplied in the steam per stroke) + (heat in steam enclosed at compression) + (work done upon

[1] Superheating is also said to greatly reduce the loss by leakage between the slide valve and the face of the ports.

[2] The scale of the indicator diagram in heat-units = total work in foot-lbs. ÷ 778.

the steam during compression) – (work done during admission) – (heat remaining in steam at cut-off).

Using the same symbols as employed in Hirn's analysis, p. 120 then, when Q_a = heat missing at cut-off—

(1) For steam not superheated at cut-off (Fig. 166) :—

$$Q + M_o(h_o + x_o\rho_o) + AW_d = AW_a + Q_a + (M + M_o)(h_1 + x_1\rho_1).$$

(2) For steam superheated at cut-off (Fig. 167) :—

$$Q + M_o(h_o + x_o\rho_o) + AW_d = AW_a + Q_a + (M + M_o)\{h_1 + \rho_1 + c_p(t_s - t_a)\}$$

from which Q_a may be obtained.

The value of t_s, the absolute temperature of the superheated steam at cut-off, is obtained by measuring to scale from the clearance line

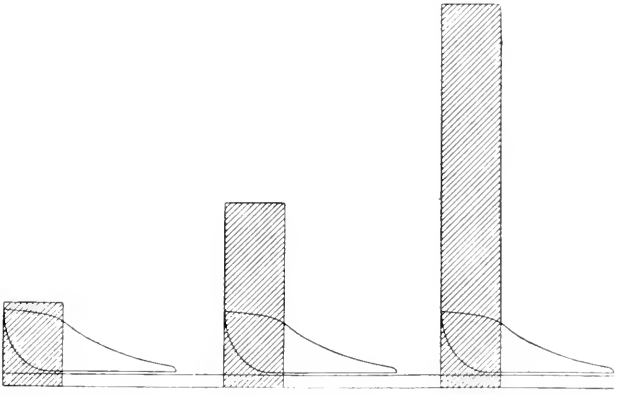

Fig. 168.—High superheat.

Fig. 169.—Medium superheat.

Fig. 170.—No superheat.

the volume v_s of the steam at cut-off on the indicator diagram; and to the same scale the volume v_a of saturated steam measured to the saturated-steam curve. Then it is assumed that the steam behaves as a perfect gas, and expands in proportion to its absolute temperature: and $t_s : t_a :: v_s : v_a$.

From a series of trials made by the author, the diagrams Figs. 168, 169, 170 have been drawn, showing the way in which the extent of the heat-interchange with the cylinder walls during admission is reduced by superheating. The heat-exchange area, shown shaded, and equal in value to Q_a in the above formula, is drawn to the same scale as the work-area of the indicator diagram expressed in heat-units. The Figs. 168 to 170 show how the heat-exchange becomes smaller as the degree of superheat increases, or, in other words, as the dryness of the steam up to cut-off increases. The power and speed of the engine, and therefore also the area of the indicator diagram, are constant throughout.

Effect of Superheat on Weight of Steam required per Stroke.—With a constant speed and power of engine, and a constant area of

indicator diagram, but a varying degree of superheat in the steam, the relative weights of steam passing through the cylinder per stroke, may be shown by placing the dry-steam curve upon the diagram as explained on p. 116.

Then for the constant-work diagram, shown shaded (Fig. 171), the weight of steam required per stroke when no superheat is used is represented by *ad* lbs.

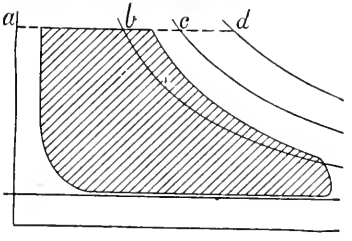

FIG. 171.

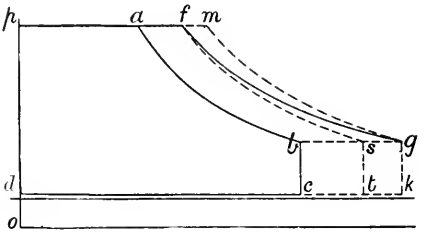

FIG. 172.

If the steam supplied to the engine be sufficiently superheated to render the steam superheated at cut-off, then the weight of steam now required per stroke $= \frac{ab}{ad}$ of the weight required when no superheat was used. When some intermediate degree of superheat is employed, the weight of steam passing through the cylinder per stroke $= \frac{ac}{ad}$ of the weight required when no superheat is used.

Effect of Superheat on Work done per Pound of Steam.—The effect on the pressure-volume diagram of superheating the steam is shown by Fig. 172, where *pf* represents the volume of 1 lb. of steam at pressure *op*, and $pa \div pf$ is the dry-steam fraction at cut-off. Then, if the steam expand down to the terminal pressure *b*, area *pabcd* represents approximately the proportion converted into work by saturated steam; and *fg* is the line of constant-steam weight. If the steam be superheated sufficiently to secure dry steam at cut-off, and it is expanded down to the same terminal pressure, then as expansion proceeds the expansion curve *fs* will fall within the dry-steam line *fg*, and the steam will become wet, and the area *pfstd* is the work area. The gain due to superheat, being equal to the difference of the two areas, $= pfstd - pabcd$. If the superheat be increased so as to secure dry steam at release, then the steam is superheated at cut-off, and its temperature T_s at point of cut-off $m = T_n \times \frac{pm}{pf}$, where T_n is the temperature of saturated steam at the pressure at point *m*. The superheat gradually disappears as the expansion proceeds, till the steam falls to the temperature of dry steam at *g*. This last condition is the condition of maximum theoretical efficiency.

The effect of superheat in increasing the effective work done per

pound of steam is well shown by the aid of the temperature-entropy diagram. Fig. 173 is illustrative of the kind of figures obtained in this way.

This diagram is drawn from the indicator diagrams, having first obtained the weight of steam used per stroke, also the dryness fraction of the steam, using different degrees of superheat in each case, but maintaining a constant speed and power. They are then transferred direct to the temperature-entropy chart (see p. 116).

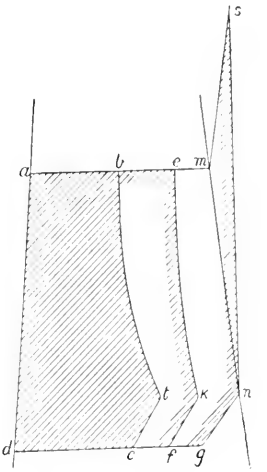

Fig 173.

Thus, if the area *abcd* represent in thermal units the work done per pound of steam when no superheat is used, then the addition of a moderate amount of superheat has the effect of increasing the dryness fraction of the steam, and thus increasing the effective-work area *abcd* to *aefd*. If sufficient superheat be added to maintain the steam in a superheated condition at cut-off and throughout expansion, then the dryness line passes outside the saturated-steam line, and a peak rises to a point *s*, the height of which depends upon the actual temperature of the steam in the cylinder, and is determined as already described on p. 152, where $t_s = t_n \frac{v_s}{v_n}$.

Then the effective-work area per pound of steam = *amsngd*.

It will thus be evident how superheat, by increasing the dryness fraction of the steam in the cylinder, increases the useful work done per pound of steam supplied, the steam previously lost in the cylinder by initial condensation being now available for useful work.

Considering the expansion line of these diagrams, and the extent to which they deviate from the vertical adiabatic line, it will be seen that the wetter the steam is in the cylinder at cut-off, the greater the flow of heat from the walls to the steam during expansion, as shown by the slope of the expansion line *bt* towards the dry-steam line *mn* as the expansion proceeds; but the drier the steam is at cut-off, the more nearly the expansion line becomes a vertical line (see *ek*)—in other words, the more nearly the cylinder becomes non-conducting.

If the superheat is sufficiently high to supply not only the heat absorbed by the cylinder walls, but also to provide the heat-equivalent of the work done during expansion, then the steam will be dry at release; and this is the condition of maximum efficiency in a single cylinder.

If more superheat is added to the steam than is sufficient for the purpose of securing dry steam at release, then the steam is superheated in the exhaust pipe, and, unless the engine is compound, the superheat in the exhaust steam increases the loss at exhaust.

Superheated Steam in Compound Engines.—It is not practicable to superheat the steam supplied to the first cylinder of compound engines to such an extent as to secure superheated steam in the second cylinder. The very high economies obtained in practice by the use of superheated steam have been obtained in engines where the steam in the first cylinder only was superheated, and then it is exceptional to find the steam dry at release in the first cylinder, even with steam in the high-pressure valve-chest at 600° Fahr.

In compound engines, although, by means of high superheating, the whole of the steam supplied to the first cylinder may appear in that cylinder as dry steam, yet when it passes forward to the next cylinder, only about 70 per cent. of it, or less, will appear as steam at cut-off, the remainder being present as water, if there is no superheating between the cylinders. The power of the lower-pressure cylinders is therefore much reduced as compared with the power of the high-pressure cylinder. Superheating between the cylinders would add to the power and efficiency of the lower-pressure cylinders for a given weight of steam supplied to them; and this may be accomplished by fitting a multitubular reheater receiver between the cylinders, for reheating with superheated steam, by surface reheating (not by mixing). This is equivalent to jacketing the receiver.

Superheated steam may be looked upon, not as a means of obtaining a thermal efficiency with the steam-engine in any way proportional to the temperatures used in the superheat, but as a device for realizing, or at least approaching, the full thermal efficiency of the saturated steam between the range of pressures used in the engine.

Notwithstanding what has already been done, still higher efficiencies may be expected to follow the adoption of higher initial pressures combined with sufficient superheating to maintain the steam dry throughout the expansion.

Admission of a Supplementary Supply of Superheated Steam between the Cylinders of Compound Engines.—If drying and superheating the exhaust steam, on its way from the high to the low pressure cylinder, could be accomplished by the admission of an auxiliary feed of highly superheated steam from the main steam-pipe to the receiver, it might be supposed that the loss would be more than compensated by the increased efficiency of the steam in the following cylinders. But it will be seen that this proposal, though often made, is not feasible; for, assuming the auxiliary steam supplied from the main steam-pipe to contain 10 per cent. additional heat as superheat—equivalent to, say, 100 heat-units per pound—then, if the steam in the receiver contains 10 per cent. of moisture, the weight of auxiliary feed necessary, even to dry the steam without any superheating (that is, to provide heat-units $= \frac{1}{10}$L, where L = latent heat of steam in the receiver), would be nearly equal to the total weight of steam exhausted into the receiver from the first cylinder, which is an altogether impracticable quantity.[1]

Lubrication.—The difficulties which arose from defective lubrication

[1] *Proc. Inst. C.E.*, vol. cxviii. p. 86.

in the earlier applications of superheated steam were probably due to the fact that the lubricant—or at least that portion of it admitted to the valve-chest, where it would be subjected to the maximum temperature of the steam—had all its lubricating properties destroyed, and its presence then would be more harmful than otherwise. But with the greatly improved quality of the lubricants now to be obtained, and with increased attention to the method of application of the lubricant, this cause of trouble has been removed.

If great care is taken to prevent loss of heat by radiation between

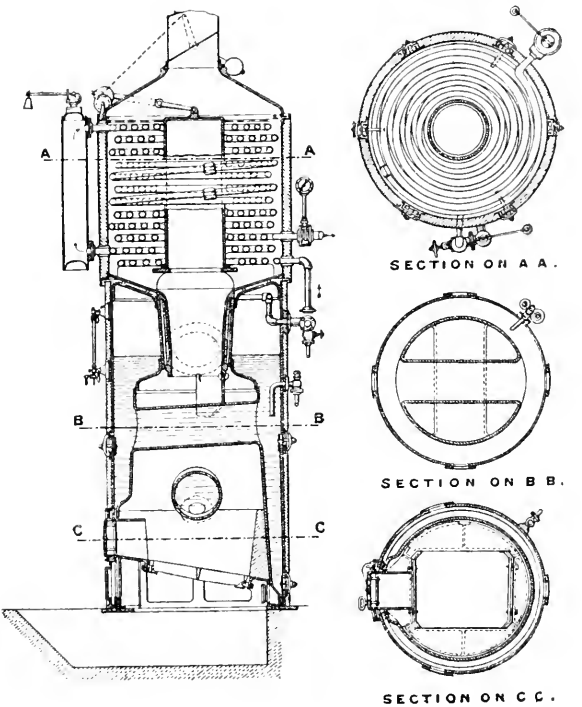

FIG. 174.

the superheater and the engine by the ample use of good non-conductors, then the superheated steam may be delivered at a high temperature up to and surrounding the admission valve; but when it enters the cylinder it parts usually with the whole of its superheat to the cylinder walls, the steam being rarely superheated at cut-off except with very highly superheated steam, and then only when the cut-off is comparatively late.

Hence the chief point requiring attention in regard to lubrication is the steam-admission valves rather than the piston.

Superheaters.—Fig. 174 illustrates the *Schmidt superheater* as fitted to a small vertical boiler. It consists of coils of tubes placed above the boiler, around which the flue gases are made to pass on their way to the chimney. The coils are arranged watch-spring like, and placed one above the other.

The steam leaves the steam-space of the boiler by a perforated tube, enters first the lowest coil, and then passes to the next coil above it. These two coils are termed the "fore-superheater," and they contain the wettest steam; they are also, of course, subjected to the highest temperatures of the flue gases. The steam then passes from the second coil into the vertical enlarged pipe (called the "after-evaporator"), and from here it passes to the topmost coil of the upper or "main superheater." It then flows downwards through the successive coils in a direction opposite to that of the flow of the chimney gases, and leaves the superheater at its maximum temperature from the lowest coil of the main superheater (the third coil from the bottom) and passes forward to the engine. The steam flowing in the opposite direction to the chimney gases enables a high temperature of steam to be obtained with a comparatively low temperature of chimney gases.

The wet steam in the lowest coils is intended as a protection against overheating of these coils.

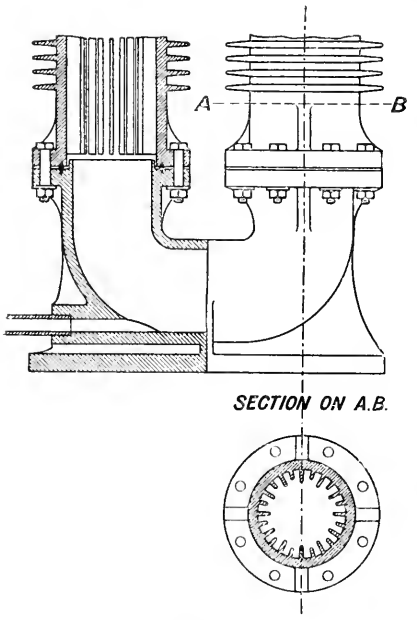

FIG. 175.

For regulating the superheat, a valve is fixed at the top of the vertical flue tube, which is closed when the maximum superheat is required, and the gases have then all to pass through the superheater coils on their way to the chimney. To reduce the superheat the valve is partially raised, and more or less of the furnace gases may escape by the chimney without passing through the coils.

In experimenting with this superheater, the author found that if the weight of steam passed through the coils per minute were reduced, then, independently of the firing, the temperature of the steam immediately began to fall; on the other hand, if the weight of steam passed through the coils per minute were increased, then the temperature of the steam immediately began to rise

also. From many experiments it was found that, within certain limits, the higher the velocity of the steam passing through the superheater, the more rapidly the heat was taken up by the steam.

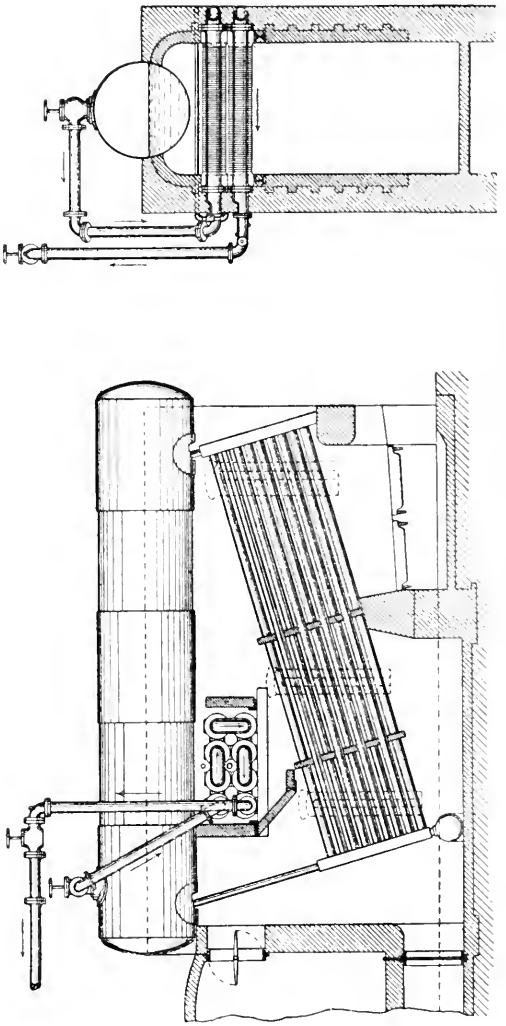

Fig. 176.—Babcock and Wilcox Water-tube Boiler, with Schwoerer superheater.

The *Schwoerer superheater* is a type much used on the Continent, and with considerable success. It consists of an arrangement of cast-iron pipes fitted with transverse ribs on the outside and longitudinal

ribs on the inside, as shown in Fig. 175. The regulation of the superheat is secured by dampers.

Fig. 176 is an illustration of the Schwoerer superheater[1] as fitted by Messrs. James Simpson & Co. to a Babcock and Wilcox boiler.

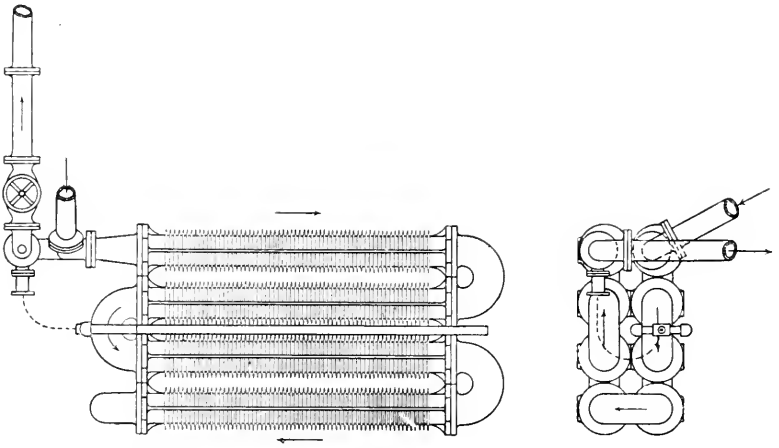

Fig. 177.

Fig. 177 is an enlarged view of the superheater. Fig. 178 shows its application by the same firm to a Lancashire boiler. Fig. 179 shows an independently fired installation of the Schwoerer superheater. Figs. 180 and 181 show a small-tube type of superheater as fitted to a Lancashire boiler by Messrs. Hick, Hargreaves & Co.

The *position of the superheater*, in relation to its distance from the furnace, depends upon the extent of the superheat required; if the steam is merely to be dried, then the superheater may be placed in the waste gases beyond the boiler-heating surface. But it is usually desirable to place the superheater where the temperature of the gases is at least 1000° F. The higher the temperature of the gases to which it is exposed, the more efficient the surface, and the smaller proportionately the surface required for a given degree of superheat.

Heat transmitted by Superheaters.—From the results of many experiments, Mr. Michael Longridge states that, in order that the superheater surface may be efficient, there should be a head of temperature between the flue gases and the steam of something like 400° F. With such conditions he estimates that a heat transmission of about five units per square foot of surface per hour per degree of difference in temperature, the difference of temperature being taken as the difference between the mean temperature of the flue gases and of the steam respectively before entering and after leaving the superheater,[2]

[1] From a paper on "Superheating," by Mr. W. H. Patchell *Proc. Inst Mech. Engineers*, April, 1896.

[2] *Proc. Inst. Mech. Engineers*, 1896, p. 175.

FIG. 178.—Schwoerer superheater attached to a Lancashire boiler.

Regulation of Superheat.—The methods employed for this purpose may be summarized as follows :—

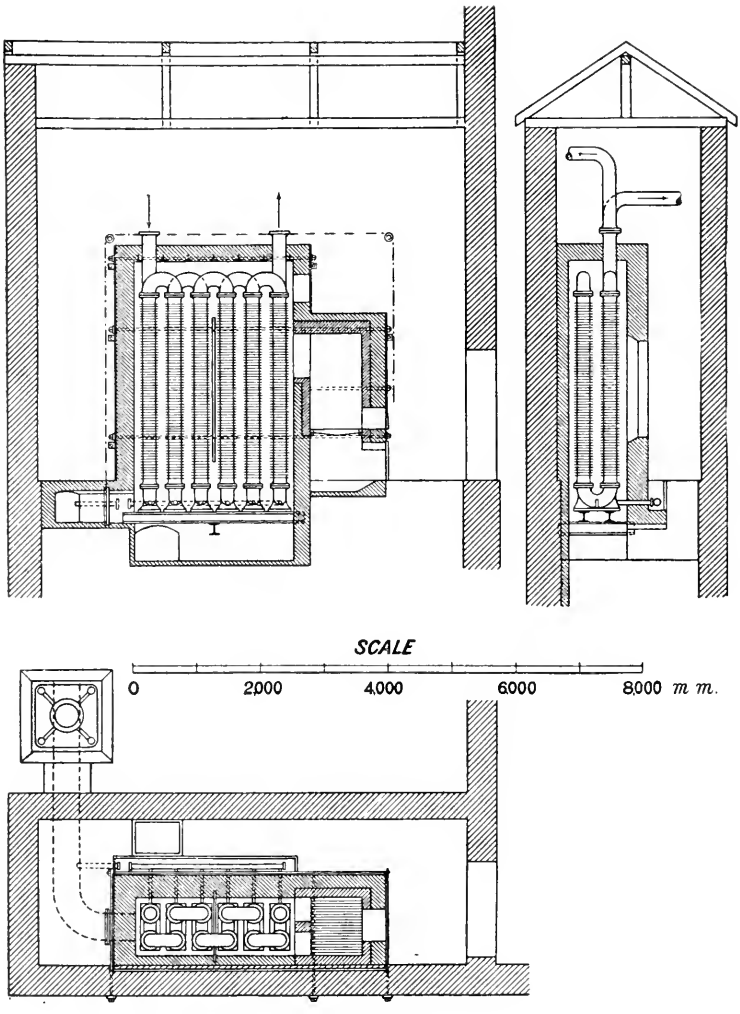

FIG. 179.[1]

(1) By the use of dampers regulating the flow of flue gases to the superheater.

[1] From "Application de la Surchauffe aux Machines à vapeur," by Prof. François Sinigaglia.

(2) By mixing or combining saturated and superheated steam in any required proportion.

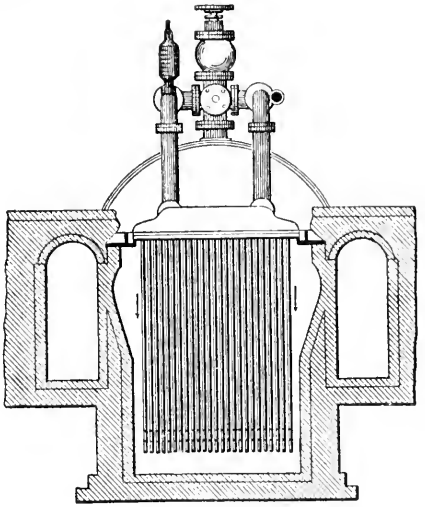

Fig. 180.

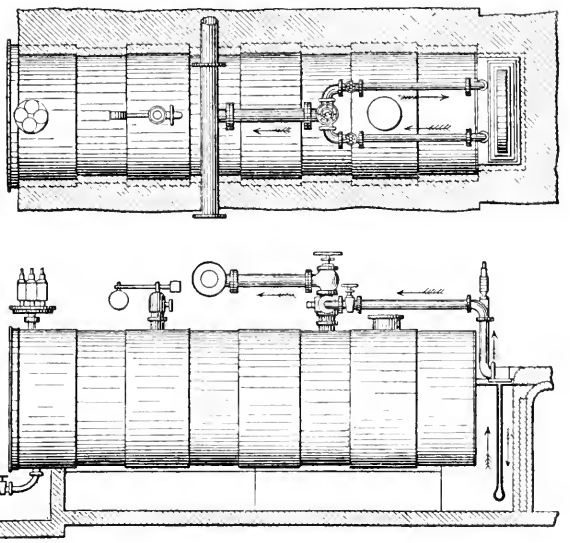

Fig. 181.

(3) By the use of an independently fired superheater, which arrangement lends itself very easily to the regulation of the heat.

(4) By regulating the rate of flow of the steam.

CHAPTER IX.

INTERNAL SURFACE OF ENGINE CYLINDERS.

The loss by condensation in engine cylinders is due to the difference of temperature between the steam and the cooler metal of the cylinder, and the extent of the loss increases as the extent of the actual surface in contact with the steam increases.

The portion of the double stroke, during which heat passes from the steam to the metal, begins at admission of the steam to the cylinder and terminates usually almost immediately after cut-off, where the expanding steam has fallen in temperature to that of the mean temperature of the walls. The greater the area of the internal surface per pound of steam admitted, the greater the condensation. Hence the importance of reducing this surface as much as possible, especially the clearance portion of it, where, by care in designing, considerable reductions might often be made, with a corresponding improvement in the economy of the engine.

In respect of clearance surface and cylinder surface generally, it may be well to compare the effect of difference of ratio between cylinder diameter and length of stroke.

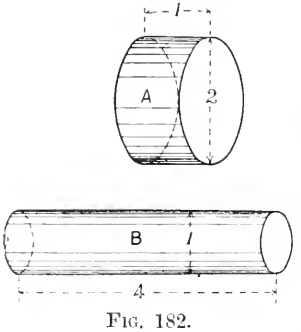

Fig. 182.

Taking cylinders (Fig. 182) of equal capacity A and B, A having 4 sq. ft. of piston area and 1 ft. stroke, and B having 1 sq. ft. of piston area and 4 ft. stroke; A representing the short-stroke, high-speed type of engine of relatively large piston area, and B representing the long-stroke type with relatively small piston area; then, neglecting clearance volume and steam passages, the relative area of clearance and cylinder surface exposed to equal weights of steam in the two cases will be seen from the following table:—

		A.	*B*
Piston area	sq. ft.	4·0	1·0
Stroke	ft.	1·0	4·0
Piston displacement	cub. ft.	4·0	4·0
Surface of barrel	sq. ft.	7·09	14·18
Clearance surface	„	8·0	2·0
„ „ + barrel to ¼ stroke	„	9·78	5·56
„ „ + „ ½ „	„	11·56	9·13

	A.	B.
Clearance surface + barrel to ¾ stroke ... ... sq. ft.	13·35	12·69
„ „ + „ full „ ... ... „	15·13	16·26
Surface exposed per unit weight of steam admitted with cut-off at ¼ stroke	9·78	5·56
Ditto ditto ½ „	5·78	4·56
Ditto ditto ¾ „	4·45	4·23
Ditto ditto full „	3·78	4·06

Comparing the two cases, on admission of steam to the respective cylinders, the clearance surface of the short-stroke engine is four times as great as with the long-stroke. If cut-off takes place at ¼ stroke, the actual wall surface of the cylinder enclosing the steam up to cut-off is 5·56 sq. ft. in the long-stroke engine, and 75 per cent. more than this in the short-stroke engine. That is, if condensation be directly proportional to surface, the condensation in the short-stroke engine will be 75 per cent. greater than in the long-stroke engine when cut-off takes place at ¼ stroke in each engine.

It will, however, be observed that as the cut-off is made later, the respective areas of cylinder surface in the two cases become more and more nearly alike, and if steam were admitted to the end of the stroke, the surface is 7 per cent. greater in the long-stroke engine ; in other words, the loss by condensation in the two cylinders would be more nearly the same as the cut-off is later. The earlier the cut-off the more advantage lies with the long-stroke engine.

It has been so far assumed that the engines are run at the same rotational speed ; but if they are run at the same piston speed, as would be more probably the case, then the short-stroke engine would make four times as many revolutions as the long-stroke.

But if the assumption is correct that cylinder condensation is inversely proportional to the square root of the number of rotations, then the loss by condensation in the long-stroke engine as compared with that in the short-stroke is as $1 : \frac{1}{\sqrt{4}} = 1 : \frac{1}{2}$.

Short-stroke engines are therefore most economical when run at high speeds and with a late cut-off.

This statement takes no account of clearance volume. In short-stroke engines (see above table) the clearance volume is proportionally large, and in such engines great care must be taken to make the best use of the compression steam, so as to fill the clearance space with steam at a pressure as near as possible to the admission pressure. otherwise the difference must be made up by boiler steam, and the amount required for this purpose may be a large proportion of the total steam used.

Turned and Polished Clearance Surfaces.—The advantage of turned and polished surfaces for the clearance spaces in reducing cylinder condensation has been proved in numerous instances ; and the most economical results yet recorded with saturated steam have been obtained in engines having the piston face and inner surface of the cylinder cover turned and polished. The surfaces appear to be thereby rendered more nearly non-conducting.

CHAPTER X.

THE STEAM-JACKET.

THE steam-jacket, as its name implies, is an arrangement for covering the cylinder with a hot-steam covering. It consists of a chamber or chambers enveloping the working barrel and the covers of the cylinder. These chambers are filled with steam at a temperature equal to or greater than the initial temperature of the working steam entering the cylinder.

The object of the jacket is to maintain the temperature of the internal walls as nearly as possible equal to that of the steam entering the cylinder, and in this way to reduce the loss due to initial condensation.

As already stated, whatever tends to increase the mean temperature of the walls tends also to reduce initial condensation, and experiment has shown that the heat expended in the jacket for this purpose is more than compensated for by the increased efficiency of the working steam in the cylinder. The extent of the gain following the use of the jacket varies greatly according to the conditions of working, the construction of the jacket, including the arrangements for drainage and for supply of steam to the jacket, the temperature of the steam supplied to the jacket, the speed of the engine, the quality of the steam entering the cylinder, the ratio of internal cylinder surface to weight of steam used, the range of temperature of the steam in the cylinder, etc.

Action of the Jacket.—Unjacketed cast-iron cylinders are practically a heat sponge absorbing from the steam, each stroke during admission, heat which should have been employed in doing useful work, and rejecting the same amount of heat, but at a lower temperature, during expansion and exhaust, by re-evaporation of the water deposited at the beginning of the stroke. This heat is almost entirely wasted, as the useful work done by it by re-evaporation of water during expansion is extremely small, and the remainder goes away during exhaust to increase the already large exhaust waste.

The greater the proportion of water deposited in the cylinder, up to a certain limiting point, the greater the demand upon the store of heat in the cylinder walls for the purpose of re-evaporation; the deeper, also, the ebb and flow of the heat-wave in the metal walls

each stroke, the larger the proportion of heat taking part in this most wasteful process.

The action of the jacket is therefore to reduce the extent of the heat-interchange between the steam and the walls, and, as a consequence, to reduce also the weight of water to be afterwards re-evaporated at the expense of heat from the cylinder walls. Thus with a jacket a smaller proportion of the heat of the steam is wasted in merely passing into and out of the walls, and a larger proportion is employed in the performance of useful work than when no jacket is used.

All heat transmitted through the cylinder walls from the jacket is accompanied by a corresponding loss due to condensation in the jacket, but the net result is in favour of jacketing. For it should be noted that each 1 lb. of steam condensed in the jacket leaves the jacket as *water* containing say 270 units of heat; while each 1 lb. of steam condensed in the cylinder passes away as *steam*, and carries with it to the air or condenser the latent heat of the steam (from 900 to 1000 units) which has been first given to and then taken from the cylinder walls. There is no re-evaporation of the water in the jacket, but it may be usefully employed as a hot feed to the boiler. The heat transmitted by the jacket per pound of steam condensed therein is the latent heat of steam L for the pressure in the jacket.

Effect of Speed of Rotation.—Since the amount of heat transmitted through the cylinder walls varies with the time, then, as the rate of rotation increases, the extent of the heat interchanged per stroke between the steam and the walls will become less, until, when the speed is indefinitely great, the heat-interchange is zero, and the jacket is of no effect. From this it follows that the efficiency of the jacket is greater as the rotational speeds decrease.

Effect of Ratio of Expansion.—With given initial and back pressures—that is, with a fixed range of temperatures in the cylinder, but with a variable cut-off—the efficiency of the jacket will vary with the point of cut-off. For, since the flow of heat through the cylinder walls varies with the temperature on the two sides of the walls, it is evident that the jacket heat will pass more readily the earlier the cut-off, since the mean temperature of the internal portion of the cylinder walls is lower as the cut-off is earlier.

Hence the jacket is more effective in cylinders having a large ratio of expansion. During expansion the re-evaporation is greater without a jacket than with one, and the dryness fraction, especially at release, is always greater with a jacket than without one.

The following diagram shows the varying efficiency of a steam-jacket at different ratios of expansion. It was prepared by Mr. Bryan Donkin from trials made by him with an engine having a cylinder 6 in. diameter, stroke 8 in.; speed in all experiments about 220 revolutions per minute; steam pressure, about 50 lbs. above atmosphere.

Water in the cylinder, from any cause whatever, is a source of loss of heat from the cylinder walls. Owing to the property which liquids possess of absorbing heat from surrounding bodies

during the process of evaporation which follows a fall of pressure, it is easy to account for the rapid flow of heat from the walls to the water in the cylinder during expansion, but especially when the exhaust port opens.

However dry the condition of the steam on entering the cylinder, there is always *some* initial condensation (except when a high degree of superheat is used), and even if the steam were dry at cut-off, there is still the water formed during expansion by transmutation of heat into work.

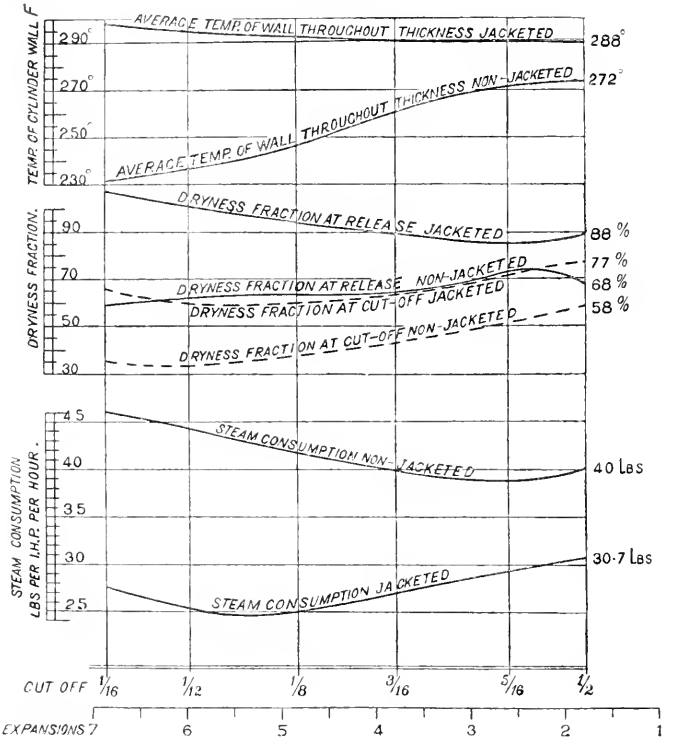

FIG. 183

Assuming that all possible care has been taken to obtain dry steam in the cylinder by lagging steam-pipes, cylinders, and valve-chests, by fixing separators, and drain-cocks from valve-chests, by reduction as far as possible of the proportion of clearance surface, and by polished internal surfaces of cylinder-cover and pistons, then, unless the speed of rotation is high, the steam-jacket or superheating will still be necessary to secure dry steam at release.

The action of the jacket may be further illustrated by the aid of the temperature-entropy diagram.

1. If the cylinder walls are as hot as the entering steam, then the steam is dry at cut-off. The heat required to maintain the steam dry throughout expansion = area *akfd* (Fig. 184), where *kf* is the dry or saturated steam curve, or curve of constant steam weight. This shows that without a jacket, in the best of engines, the dry steam, expanding adiabatically and doing work, becomes wetter as the expansion continues, and that the steam can only be dry at release by the further addition of heat from an external source. It also shows that the heat so added is not theoretically so efficient as the heat of the working steam, because the whole of the added heat is not applied at its maximum temperature, but is applied during a gradual fall of temperature. The efficiency of the jacket steam in such a case is *nkf* ÷ *akfd*. If this were the condition of things in practice, then a jacket would not be a source of gain, but a source of loss of efficiency; but in practice these conditions are considerably modified, with the result that the jacket heat actually increases the efficiency.

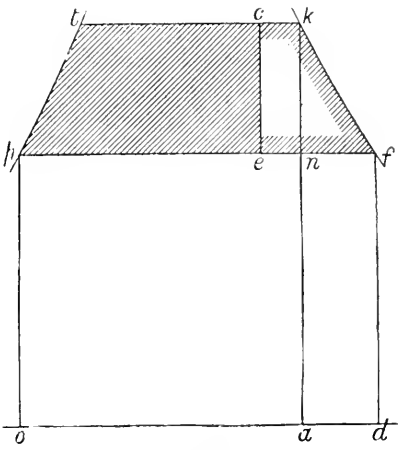

FIG. 184.

2. In unjacketed cylinders, though dry steam is supplied to the engine, the steam is never dry at cut-off, but has some dryness fraction *tc* ÷ *tk*. Suppose now that a jacket be added, and that the steam is thereby rendered dry at cut-off and throughout expansion to release. Then heat supplied by jacket = area *akfd*. But by this addition of heat there is an increase of useful work = area *ekfee*; therefore the actual efficiency of the jacket heat = *ekfee* ÷ *akfd*, or an increase of engine efficiency of from (*tcep* ÷ *optka*) to (*tkfp* ÷ *optkfd*).

Construction of the Jacket.—The success of jacketing depends very largely upon the care exercised both in the design and use of the jacket. If a jacket is so constructed as to leave pockets which will inevitably remain filled with water, or flat horizontal surfaces upon which will continually lie a layer of water through which heat is expected to pass to the cylinder, the result will be disappointing. Great care should be taken to arrange for the proper flow of the water deposited in the jacket to the jacket drain by sloping surfaces and properly placed drain-pipes.

The steam-supply pipe to the jacket should be made of ample diameter; also care should be taken to provide for efficient circulation of the steam in the jacket.

Cylinders are sometimes made with a surrounding jacket, through

which the steam from the boiler first passes before entering the cylinder. The object of this is, no doubt, to accelerate the action of the jacket by a rapid circulation of the jacket steam. Such jackets should be well drained, but the jacket is never in direct connection with the exhaust side of the piston, hence its mean temperature is higher than that of the internal cylinder walls.

The value of the jacket is greater, other things being equal, as the dimensions of the cylinder are smaller; because in small cylinders the cylinder surface per unit weight of steam passing through the engine is greater than in large cylinders.

One effect of jackets is to increase the tendency to loss of heat by radiation, as the area of the external surface and the temperature of the surface are both increased by the addition of jackets.

It appears, from various experiments, that there is no advantage in making the pressure of the steam in the jacket of any cylinder more than a few pounds greater than that of the initial steam in the cylinder. Thus it is usual to reduce the pressure in the jackets of the second and succeeding cylinders of triple and quadruple expansion engines.

In the engines of H.M.S. *Powerful*, the pressure of steam at the stop-valve is 210 lbs. All the cylinders are steam-jacketed. The high-pressure cylinder is jacketed with steam at 210 lbs. pressure. The steam to the intermediate jacket passes through a reducing-valve loaded to 100 lbs., and to the low-pressure jacket through a reducing-valve loaded to 25 lbs.

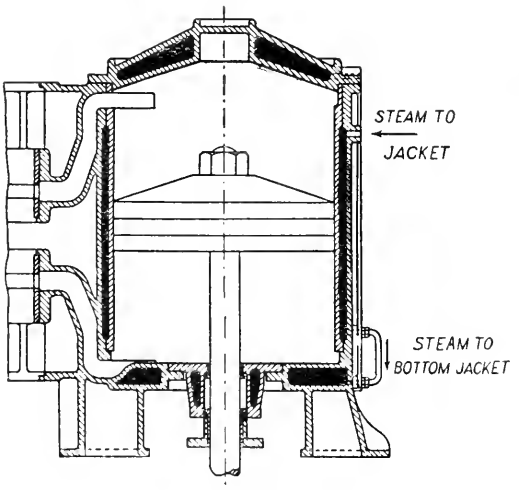

FIG. 185.

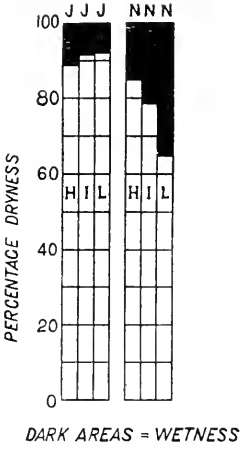

FIG. 186.

The above figure (Fig. 186) shows the effect of jackets on the cylinders of a triple-expansion engine. H = high-pressure cylinder; I = intermediate cylinder; L = low-pressure cylinder. The rect-

angles marked N, N, N show by the darkened areas the proportion of water present at cut-off with no steam in the jackets.

The rectangles marked J, J, J show the effect on the dryness fraction of the steam when steam is admitted to all the jackets; from which it will be seen that the gain resulting from a jacket is greatest in the low-pressure cylinder, and least in the high-pressure cylinder.[1]

The Reports of the Research Committee of the Institution of Mechanical Engineers on the value of the steam-jacket are a collection of valuable facts obtained from numerous sources, but the Report containing the final conclusions of the committee has not yet been published. It has, however, been shown that the gain by jacketing varies considerably as the conditions and extent of the jacketing vary, being from 2 or 3 per cent. to 25 per cent. in favour of jacketing.

In the trial of the Pawtucket pumping engine by Prof. J. E. Denton, the engine being compound, with both cylinders jacketed on barrels and ends, and with steam at full boiler pressure in all the jackets, a difference of only 3 per cent. in favour of jacketing was obtained.

From trials made by Prof. Osborne Reynolds of the triple-expansion fully jacketed engines at the Owens College, it was found that with jackets filled throughout with boiler pressure, 19·4 per cent. of the total heat supplied was converted into work. Without steam in any of the cylinder jackets this percentage fell to 15·5, showing a gain of over 25 per cent. in favour of jacketing.

[1] See "Reports of Research Committee on the Value of the Steam Jacket," *Proc. Inst. M.E.*, 1889, 1892, 1894.

CHAPTER XI.

THE INJECTOR.

The injector is an instrument for feeding boilers, and is used instead of, or in conjunction with, a feed pump. It was invented in 1858 by M. Giffard, a French engineer, who established beyond doubt the power of a jet of steam, passing from the steam space of a boiler, to force water into the same boiler against the same internal pressure as that of the steam itself.

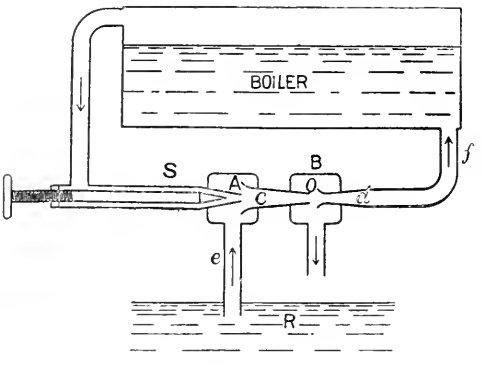

Fig. 187.

The construction of the injector will be understood by the following diagrammatic sketch (Fig. 187). The *steam-nozzle*, *s*, shows how the steam is supplied to the injector through a small inlet. The amount of the steam-supply is regulated by the coned plug, which fits more or less closely against the orifice.

The *combining tube*, *c*, is where the slowly moving water, drawn up from the well R by the action of the steam-jet, combines with the swiftly flowing stream of condensed steam, and is carried forward by it into the boiler.

The *delivery tube*, *d*, receives the contents of the combining tube. Here at its narrowest part the maximum velocity of the jet is attained, and from this point the velocity of the jet is reduced as it proceeds along the diverging tube to the boiler feed-pipe *f*.

The *overflow*, *o*, is an opening or break in the pipe through which excess of water or steam may escape during the operation of starting.

Fig. 188 illustrates the actual construction of the injector as originally introduced, and of which pattern large numbers are still made.

Fig. 189 is a section of Messrs. Holden and Brooke's Injector (non-lifting pattern).

Action of the Injector.—To start the injector, it is necessary first

to turn on the water-supply, and then to withdraw the steam-spindle slightly so as to admit steam through the nozzle into the injector. The steam-spindle may then be fully opened, the supply of water being regulated till there is no overflow of either water or steam. The steam-jet carries forward with it entrained air from the water-chamber (A, Fig. 187), thereby causing a partial vacuum in that chamber, and the water in the suction pipe to rise and enter the combining tube. The jet of steam, coming into contact with the cold water, is condensed laterally to an attenuated thread of water, which retains, however, its original velocity, and passes forward from the combining tube into the delivery tube, carrying with it entrained water.

After passing through the throat of the delivery tube, the velocity of the steam decreases as the cross-section of the diverging tube increases, and finally the combined stream enters the boiler.

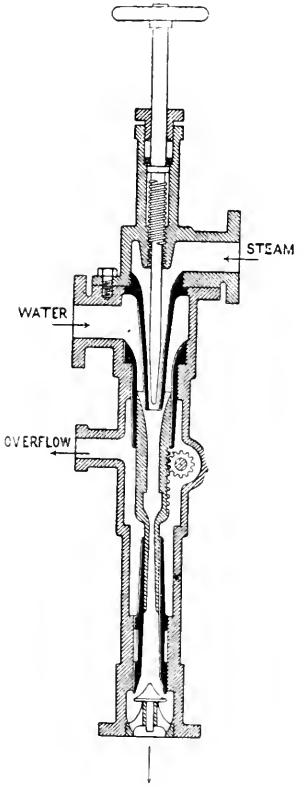

Fig. 188.

The Combining Tube.—In this tube, by means of the vacuum formed by the condensed steam, the water is drawn up into the injector. It is evident, therefore, that the water must be sufficiently cold to condense the steam, and that the proportion of

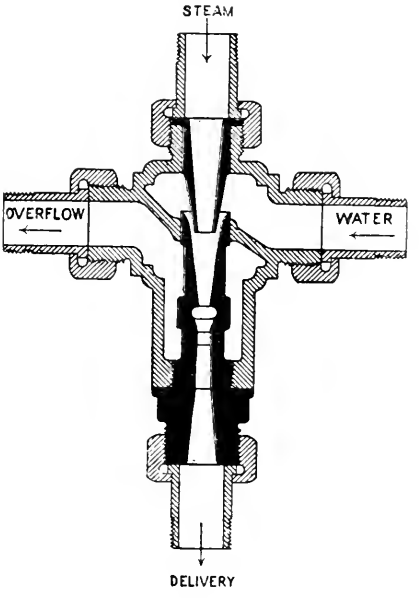

Fig. 189.

water to steam must be sufficient to ensure complete condensation,

if the injector is to lift water from a well placed below it. The quality of the vacuum in this tube depends upon the temperature of the combined steam and water.

The effect of varying the steam pressure with a given setting of the instrument is to vary also the supply of water needed. Thus, if the steam pressure is increased, the supply of feed-water should increase also, to properly condense the steam, or the degree of vacuum will be reduced and the action of the injector impaired. Or, if the pressure of the steam is reduced, the feed-water will be in excess, and will escape by the overflow.

Velocity in the Delivery Tube.—If H = the head of water in the boiler equivalent to the internal pressure, then the velocity (v) of a jet of water flowing from the boiler = $\sqrt{2gH}$, and the velocity of the jet to enter the boiler, or its equivalent in pressure, must be in excess of this.

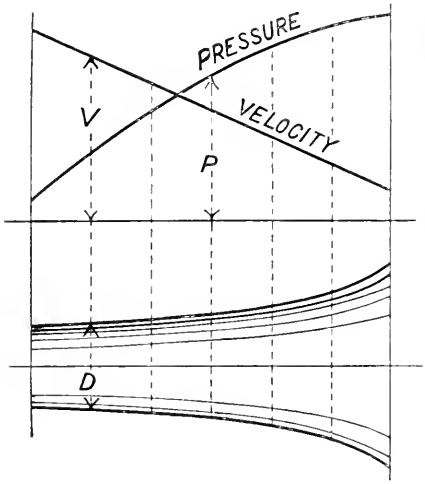

FIG. 190.

Also, if w = the weight of 1 cub. ft. of water in pounds, then P in pounds per square ft. = wH lbs.; or—

$$H = \frac{P}{w}$$

and—

$$v = \sqrt{\frac{2gP}{w}}$$

From which it is clear that the velocity of a jet varies inversely as the square root of its density (w). Thus the velocity of steam will be very much greater than the velocity of water under the same pressure, because of the very low density of steam compared with water; hence the effectiveness of the condensed steam-jet as a means of admitting water into the boiler against the boiler pressure.

The impinging jet enters the boiler because the kinetic energy which it possesses $\left(\frac{Wv^2}{2g}\right)$, or its equivalent in pressure, is greater than that which is due to the head H of the equivalent water-column acting in the opposite direction. *Napier's formula* for the flow of steam into the air in pounds per second

$$= W = \frac{P \times A}{70}$$

where P = boiler pressure absolute in pounds per square inch; A = area of orifice in square inches.

In the gradually diverging delivery tube, if a section be taken at

successive positions along the tube, there will be exactly the same weight of water flowing through each of these sections in the same time, namely, AV, where V = velocity in feet per second, and A = area in square feet; and $AV = A_1V_1 = A_2V_2$, etc., assuming the density of the jet to be uniform. And since the area A of the section increases from the minimum section towards the boiler, so the velocity decreases: and since the area changes as the square of the diameters of the section, the velocity will change inversely as the square of the diameters. This is shown by the diagram Fig. 190, where a curve of velocities is set up at successive sections of the tube, calculated thus:

$$\text{Velocity at any section} = \frac{\text{volume passing in cubic feet}}{\text{area of section in square feet}}$$

$$\text{or } V_1 = \frac{AV}{A_1}; \text{ or } V_1 = \frac{d^2V}{d_1^2}, \text{ where } d = \text{diameter of section}$$

Since the pressure at any section varies with the velocity, a curve of pressures is also drawn. It is calculated from the following formula:—

$$H_1 + \frac{v_1^2}{2g} = H_2 + \frac{v_2^2}{2g} = \text{a constant}$$

these expressions representing the "total heads" at the beginning and end respectively of the delivery tube; and the sum of the pressure and kinetic energies in the tube being a constant—

$$\text{Then } H_2 = H_1 + \frac{v_1^2 - v_2^2}{2g}$$

the value of v for any section of the tube being obtained as explained above; and the value of P being equal to wH as before, we may write—

$$\frac{P_2}{w} = \frac{P_1}{w} + \frac{v_1^2 - v_2^2}{2g}$$

Weight of Feed Water per Pound of Steam.—Assuming the steam supply to be dry, and reckoning from 32° Fahr.—

Heat-units contained in the steam per pound = $h_1 + L_1$
,, ,, feed-water per pound = h_3
,, ,, mixture per pound = $(1 + W)h_2$

Then, neglecting losses by radiation, the pounds of feed-water supplied per pound of steam used by the injector may be obtained when we know the rise of temperature of the water passing through the injector. Thus—

$$\left.\begin{array}{r}\text{Gain of heat by feed-water} = W(h_2 - h_3)\\ \text{Loss of heat by the 1 lb. of steam} = L_1 + h_1 - h_2\\ \text{The kinetic energy of the jet expressed in heat-units}\end{array}\right\} = (1 + W)\frac{v^2}{2g} \times \frac{1}{778}$$

Then—

$$L_1 + h_1 - h_2 = (1 + W)\frac{v^2}{2g} \times \frac{1}{778} + W(h_2 - h_3)$$

Loss by steam = kinetic energy of jet + gain by feed

Neglecting the term representing kinetic energy, which would be very small—

$$L_1 + h_1 - h_2 = W(h_2 - h_3)$$

$$W = \frac{L_1 + h_1 - h_2}{h_2 - h_3}$$

= the weight of feed-water lifted per pound of steam supplied to the injector

The overflow is assumed to be open to the atmosphere, and therefore the temperature of the jet cannot exceed 212° Fahr. It is seldom higher than 170° Fahr.

The temperature of the water passing into the boiler depends upon the fact that the steam from the jet must all be condensed as it leaves the steam-nozzle.

The temperature of the water with which the injector is supplied must be low enough to condense the steam from the steam-nozzle, otherwise the injector will not work. The weight of water delivered per pound of steam used is about 13 lbs. for locomotive injectors.

As the initial temperature of the feed-water is increased, the weight of steam required to lift a given weight of feed-water increases.

Efficiency of the Injector.—The mechanical work performed by the injector consists in lifting the weight of feed-water through a height h, and delivering it into the boiler against the internal pressure.

$$U = \{Wh + (W + 1)h_p\}\frac{1}{J} \text{ in heat-units}$$

where U = work done; h_p = the equivalent head = $p \times 2{\cdot}3$ due to the pressure, where 2·3 = head in feet per 1 lb. pressure; and W = pounds of water delivered per pound of steam.

If considered as a pump, the efficiency E_m is—

$$E_m = \frac{U}{L_1 + h_1 - h_2}$$

where the denominator represents the number of units of heat given up by the steam to perform the work.

The **Thermal Efficiency,** E_t, of the injector is unity, for—

$$\begin{pmatrix}\text{Heat supplied}\\ \text{from boiler}\end{pmatrix} = \begin{pmatrix}\text{work done in lifting and}\\ \text{injecting feed-water}\end{pmatrix} + \begin{pmatrix}\text{heat restored}\\ \text{to boiler}\end{pmatrix}$$

or—

$$E_t = \frac{U + W(h_2 - h_3)}{L_1 + h_1 - h_2}$$

That is, all the heat expended is restored either as work done or

in heat returned to the boiler, and the value E_t of the above fraction = 1. It should be noted, however, that the heat is returned at a lower temperature.

When a boiler plant is provided with an economizer or feed-heater, the injector may be made to supply the feed through the feed-heater, and the hot feed from the injector may thus be still further heated in the feed-heater on its way to the boiler.

The Lifting Injector.—The property possessed by the injector enabling it to *lift* water depends upon its power to reduce the pressure in chamber A (Fig. 187) below that of the atmosphere. There is no difficulty in continuing the water-supply when it has once entered the injector, because of the vacuum formed by the condensation of steam in the combining tube; but to raise the water in the first place, the jet of steam passing out of the nozzle at a high velocity must act first as an *ejector* entraining the air away from the chamber A and carrying it forward through the combining tube, thus causing a vacuum in A.

For this purpose the steam must have a *free passage* through the instrument sufficient to prevent any throttling of the steam as it issues from the nozzle, otherwise a pressure will be set up in A greater than that in B (Fig. 187) which is open to the atmosphere, and no water will be lifted.

This freedom from throttling of the steam as it passes along the combining tube may be accomplished in two ways: first, by arranging for a small amount of steam to pass through the jet by only opening slightly the steam-spindle; or, secondly, if a large flow of steam is passing through the nozzle, to arrange for a self-acting method of enlarging the area of exit for the steam, to prevent its becoming throttled in the injector. Injectors fitted with such an arrangement are termed automatic, self-acting, re-starting injectors.

"Automatic" Injectors.—These are injectors which, if stopped in their action by jolting, as on a locomotive, or from any other cause, automatically re-start, and continue to work without requiring any readjustment of the steam or water supply, as would be necessary if the injector were of the type previously described.

The methods adopted in order to fulfil the condition of automatic re-starting are shown in Figs. 191 and 192. Fig. 191 is a standard pattern as made by Messrs. Holden and Brooke. Fig. 192 is the "split-nozzle" injector, in which it will be seen that the combining tube is split longitudinally for rather more than half its length. The loose half forms a flap, and hangs freely from a hinge. When the injector is not at work the flap hangs open, and thus affords a large area for escape of steam through the overflow.

When steam is turned on it flows freely through the injector, entraining air with it, forming a vacuum in the suction pipe and drawing water into the instrument. When the water reaches the combining tube, the steam is condensed, a partial vacuum is formed, and the flap instantly closes, the overflow being in communication with the air. The split nozzle then acts as an ordinary solid

combining tube, and the water is carried forward through the delivery tube into the boiler.

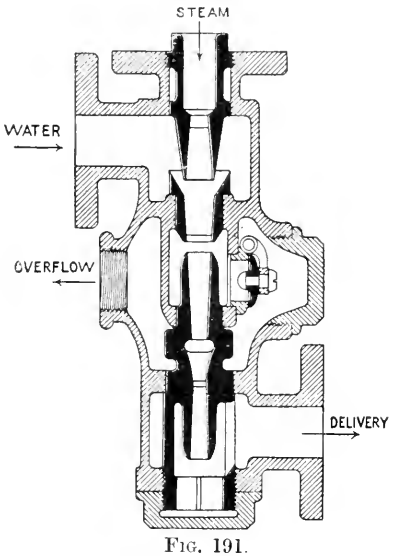

FIG. 191.

The Holden and Brooke injector (Fig. 191) is similar in principle to the flap, but the flap valve is placed in the

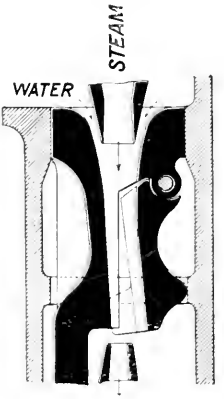

FIG. 192.

shell of the injector instead of in the nozzle.

The **Exhaust Injector** is similar in principle to an ordinary injector, and differs from it chiefly in having a steam-nozzle of very wide bore.

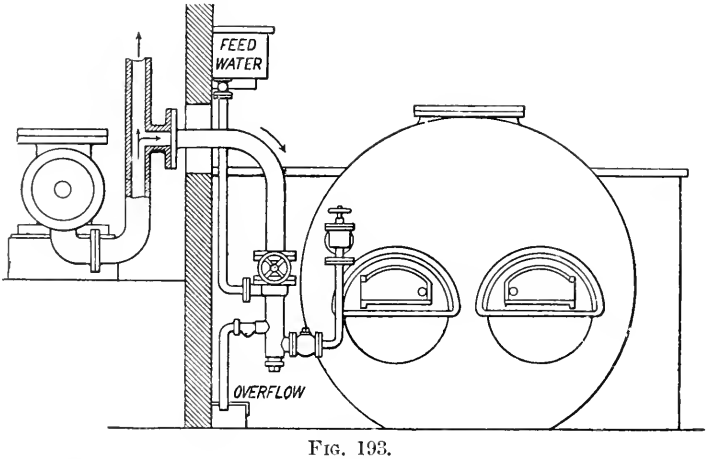

FIG. 193.

The feed-water supply to the exhaust injector must be arranged to *flow into* the injector.

Fig. 193 shows the attachment of the exhaust injector to a boiler.

CHAPTER XII.

CONDENSERS.

The condenser is a chamber into which the steam is passed and condensed instead of being exhausted into the air.

The object of the condenser is twofold, being first to remove as far as possible the effect of atmospheric pressure from the exhaust side of the piston by receiving the exhaust steam and condensing it, thus reducing the back pressure from 16 or 17 absolute to 3 or 4 lbs. absolute; and, secondly, to enable the steam which acts on the piston to be expanded down to a lower pressure before leaving the cylinder than can profitably be done when the steam exhausts into the air.

In compound engines, since the influence of the condenser acts in the largest cylinder, the proportional increase of power will be large, varying from 20 to 30 per cent., depending on the proportion which the increase of mean pressure bears to the original mean pressure of the engine referred to the low-pressure cylinders. The proportional gain by a condenser will thus be greater as the power of the engine is reduced.

Condensers are of various types, which may be divided as follows:—

1. Those requiring large quantities of cold water for the purpose of condensing the exhaust steam, including—
   (*a*) Jet condensers;
   (*b*) Surface condensers;
   (*c*) Ejector condensers;

where in each case the cooling water passing from the condenser flows away to waste.

2. Those requiring very small quantities of water, the place of the continuous water-supply being taken by an extended cooling surface exposed to currents of air, and including—
   (*a*) Evaporative condensers;
   (*b*) Ordinary condensers combined with a system of air-cooling of the condensing water.

The **jet condenser**, as its name implies, condenses the steam by means of a jet of cold water, and is illustrated by Fig. 194.

The steam, on being exhausted from the cylinder, passes into the condenser C, where it is condensed by the jet of cold water. The condensed steam and injection water must now be removed by means

of the *air-pump* AP, so called because it removes the air which comes into the condenser with the injection water and also with the steam. The air thus introduced to the condenser is cumulative, and would soon set up a large back pressure unless removed. The amount of air by volume in injection water is said to average 5 per cent. of the volume of the water.

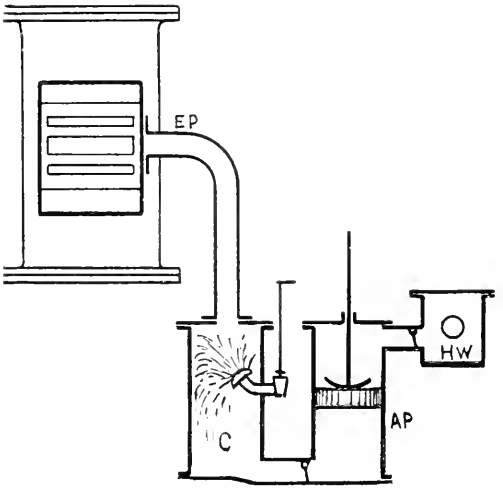

FIG. 194.

The condensed steam, injection water, air, and vapour are pumped into the hot well HW, and thence flow chiefly to waste. The feed-supply for the boilers is taken from this source.

The suction valve of the air-pump is called the *foot valve*, and the delivery valve is called the *head valve*.

Another form of jet condenser and air-pump used for horizontal engines as made by Messrs. Tangyes of Birmingham is shown in the diagram, Fig. 195.

The air-pump rod is an extension of the piston-rod through the back end of the cylinder. The exhaust steam enters the condensing chamber C, where it is met by the cold-water spray J and condensed. The condensed steam and injection water are removed from this chamber by the air-pump AP, which draws it through the suction-valves FV, and forces it forward through the delivery valve HV into the hot well HW, from which the boiler-feed may be taken. The remainder overflows.

The steam should enter the upper portion of a jet condenser so that there is no danger of the water flowing back to the cylinder, and in all cases the injection supply should be carefully regulated, and shut off before or at the same time as the steam-supply is closed when the engine is stopped.

The condenser should be so shaped that the water may flow readily by a fall from the condenser to the bottom of the air-pump.

The capacity of a jet condenser may be generally one-third that of the cylinder or cylinders exhausting into it.[1]

Surface Condensers.—The surface condenser has now entirely superseded the jet condenser for marine work, and it is employed for stationary work in cases where it is desired to return the condensed steam as feed to the boilers, as when the condensing water is too dirty or too full of impurities to be used as feed.

[1] Seaton's "Manual of Marine Engineering."

Up to about the year 1860 the pressure of steam in marine boilers was not more than 30 lbs. to the square inch, and the boiler-feed was taken from the hot well of a jet condenser. This water

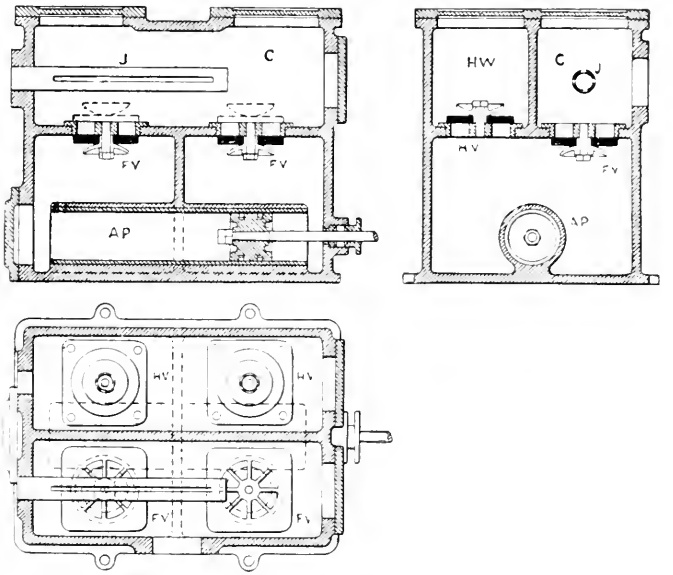

FIG. 195.

was practically as salt as sea-water, owing to the fact that the condenser was supplied with a sea-water injection, the sea-water and the exhaust steam being in the proportion of about 30 to 1 by weight. Even with the low boiler-pressures then used, the salt in the boiler was a serious drawback, for sea-water contains $\frac{1}{33}$ of its weight of solid matter dissolved in it, and when evaporated, the whole of the dissolved solid matter is left behind to be deposited on the boiler-plates, forming a more or less solid incrustation. This incrustation is a bad conductor of heat, and further, since it keeps the water from contact with the hot furnace-plate, there was great danger of the plate getting red hot, and the top of the furnace collapsing. To prevent the water in the boiler from becoming too much saturated with salt, it was necessary to "blow off" a portion of the contents of the boiler from time to time, and to supply its place with a fresh supply of sea-water. By thus blowing away to waste large quantities of hot water, a considerable waste of heat was evidently the result.

But when steam pressures began to increase—this being made possible by the introduction of mild steel plates for boiler construction—the difficulty arising from the presence of salt in the feed-water now became more serious, for at higher temperatures and pressures the presence of solid matter is much more mischievous and dangerous.

Hence the introduction of the surface condenser, which does away with the necessity of feeding the boiler with salt water; the condensed steam itself being kept separate from the condensing water, and the condensed steam alone being pumped back again to the boiler as a hot fresh-water feed. For the steam is here condensed, not by being mixed with large volumes of cold water, but by coming in contact with cold metallic surfaces.

Thus the great advantage of the surface condenser consists in its providing a feed to the boilers free from sea-salt in solution.

Starting with the boilers filled to the working level with pure water, this same water is used over and over again indefinitely, the

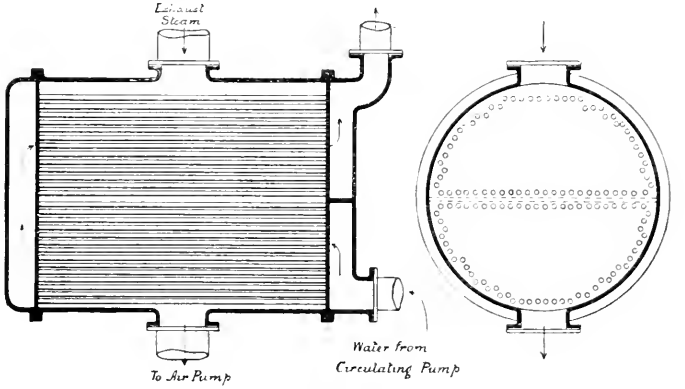

FIG. 196.

only additional feed being that necessary to make up for the small waste from leaky glands, loss by safety-valves, etc.

The general arrangement of a surface condenser is shown in Fig. 196. The cold metallic surface required by which to condense the steam is provided by means of a large number of thin tubes through which a current of cold water is circulated. This arrangement supplies a large cooling surface within comparatively small limits of space.

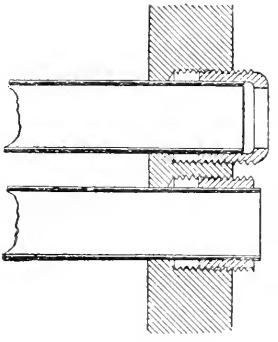

FIG. 197.

The tubes are made to pass right through the condensing chamber, and so as to permit of no connection between the steam and condensing water. The steam is exhausted into the condenser, and there comes in contact with the cold external surface of the tubes. It is then condensed, falls to the bottom, flows into the air-pump chamber, and is pumped into the hot well, from which the feed-pump passes it forward to the boiler.

The tubes are secured to tube plates as shown (Fig. 197), and outer

covers are placed over each end, space being left to allow of circulation of the cooling water as shown by the arrows.

The cooling water is forced through the tubes by means of a

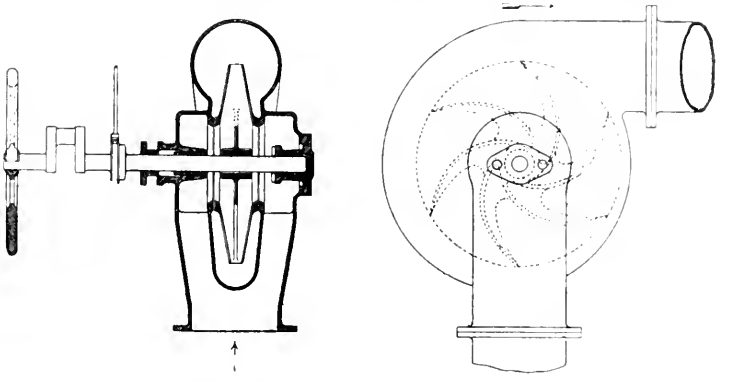

Fig. 198.

circulating pump, sometimes of an independent type, as shown in Fig. 198, though frequently of the simple plunger type worked directly from the engine.

The cold circulating water enters at the bottom corner of the condenser through a flanged opening in the cover, and it is compelled to pass first through the lower set of tubes by a horizontal dividing-plate, and to return through the upper rows to the outlet leading to the overflow.

Fig. 199 illustrates a surface condenser and air-pump as applied to marine engines, the pumps being driven from the main engines by side levers worked by links from the cross-head.

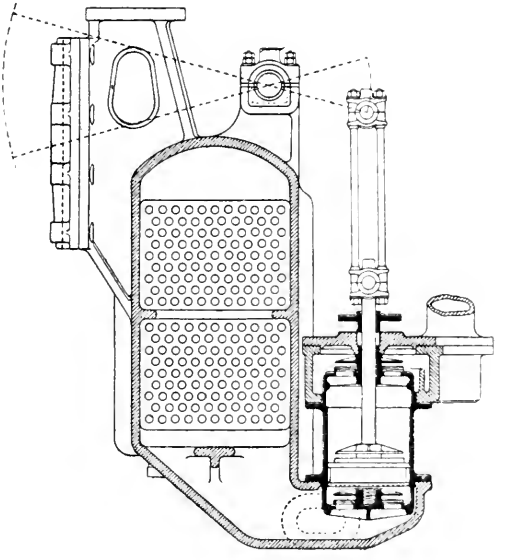

Fig. 199.

The Vacuum Gauge.—The vacuum gauge records the difference between the pressure of the external air and the pressure in the condenser in inches of mercury, not in pounds

per square inch. The face of the gauge is graduated from 0 to 30 in. of mercury. One inch of mercury = 0·491 lb. pressure. This is usually taken as 0·5, and then 1 lb. pressure = 2 in. of mercury approximately.

To convert the reading of the vacuum gauge into pounds per square inch pressure measured from absolute zero, take reading of vacuum gauge, subtract from 30, and divide by 2.

Independent Air-pump and Condenser.—To convert a non-condensing plant into condensing, a simple method is to fix an independent con-

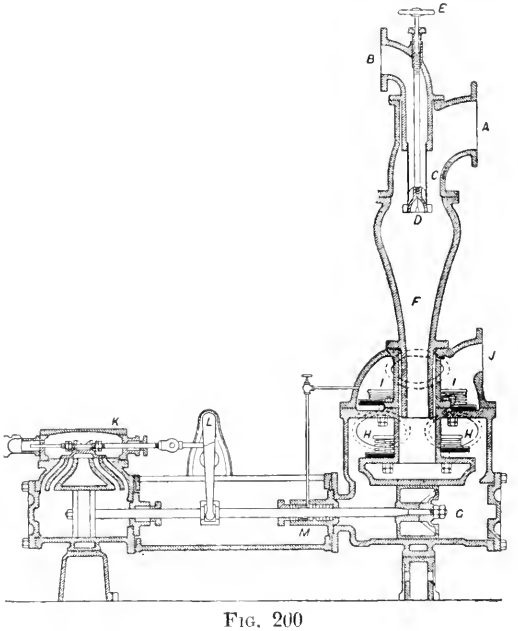

FIG. 200

denser and air-pump worked by its own separate steam-cylinder. Such an arrangement is shown in Fig. 200, which illustrates the Worthington independent jet condenser.

Exhaust steam enters at A and passes into the vacuum chamber F, through a spray of cold water issuing from the cone valve D, the cold-water supply being connected at B. The quantity of cold injection water is adjusted by the wheel E.

The condensing water and condensed steam are removed by the air-pump G, through the suction valves H, and the discharged valves I, to the discharge pipe J.

The Worthington pump is "duplex"—that is, there are two steam-cylinders and two pumps working together side by side, forming one set, and so combined as to act reciprocally, each on the steam-valve of the other. The one piston acts to give steam to the other, after which it finishes its own stroke, and waits for its valve to be acted upon

before it can renew its motion. This pause allows all the valves to close quietly, and prevents shocks. One or other of the valves is always open, and there can therefore be no dead point.

Fig. 201 illustrates the Wheeler independent surface condenser mounted on its own air and circulating pumps, these pumps being driven by a single separate steam-cylinder shown between them.

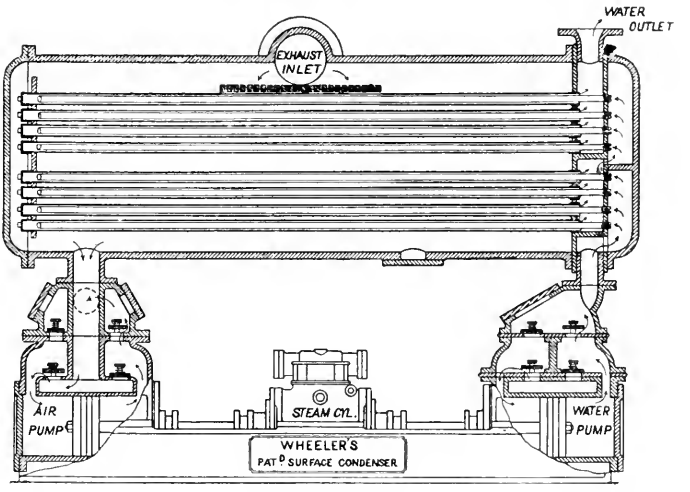

FIG. 201.

A feature of this condenser is the "double-tube system" of conveying the cooling water, as shown in Fig. 202. The circulating or cooling water enters at the outer end of the smaller internal tubes, which extend nearly to the far end of the larger tubes. The small tubes are open at the inner end, and the large tubes are closed at

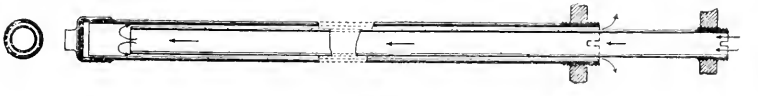

FIG. 202.

that end by a brass cap. Thus the water, after passing through the small tube, returns in the opposite direction through the annular space between the two tubes. By this device the surface exposed per unit weight of cooling water supplied is considerably increased.

The water passes from the lower group of tubes to the higher, as shown by the arrows, and after passing in a similar manner through the upper group of tubes, leaves the condenser at the top.

Weight of Water required per Pound of Steam condensed.—Each pound of cooling water entering a jet condenser will gain $t_2 - t_1$ units of heat, and each pound of steam condensed will lose $H - t_2$ units of

heat ; where t_2 = final temperature of mixture of condensed steam and injection water, t_1 = initial temperature of injection water, H = total heat of steam at pressure in exhaust pipe. If W = weight of cooling water required per pound of steam, then—

$$W(t_2 - t_1) = H - (t_2 - 32)$$

$$W = \frac{H - (t_2 - 32)}{t_2 - t_1}$$

This assumes the steam dry at exhaust, which is sufficiently accurate for practical purposes.

The weight of water required for condensing in surface condensers is somewhat greater than that in jet condensers, because in surface condensers the final temperature (t_3) of the cooling water on one side of the cooling surface must always be less than that of the steam (t_2) on the other side of the surface ; whereas in the jet condenser the condensing water and condensed steam are both finally at the same temperature (t_2). For surface condensers, assuming the exhaust steam from the cylinder is dry—

$$W = \frac{H - (t_2 - 32)}{t_3 - t_1}$$

$H - t_2 - 32$ being the heat lost by the steam, and $t_3 - t_1$ being the heat gained by the condensing water.

The Ejector Condenser.—This apparatus, as constructed by Messrs. T. Ledward & Co., is illustrated in Figs. 203 and 204. The cold water, which should be supplied from a head of 15 to 20 ft., enters the apparatus through a contracted nozzle as shown, and passes forward in the form of a round solid jet through a series of coned nozzles, and at a suitable velocity obtained from the head of water in the supply pipe.

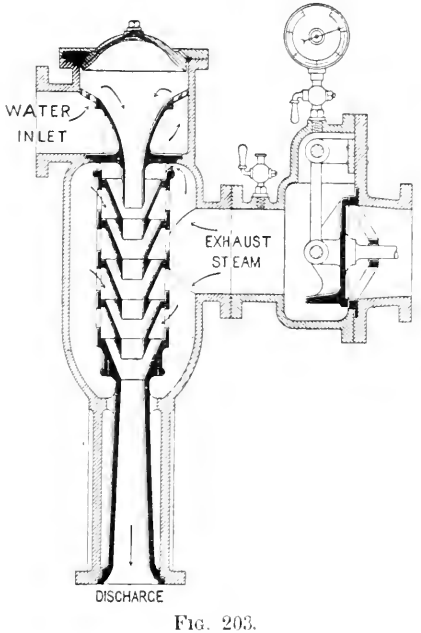

FIG. 203.

The exhaust steam entering the apparatus flows into the annular spaces between the cones, and is condensed by the stream of cold water and rapidly carried away ; and this condensation of the exhaust steam takes place so rapidly as to maintain a high degree of vacuum in the exhaust chamber.

Where a natural fall of water is not available, a pump

must be used to raise the water to the required height, or to force the water direct into the condenser.

With this apparatus a vacuum can be obtained before the engine starts, which is in some cases an advantage.

No air-pump is required with the ejector condenser. It will be

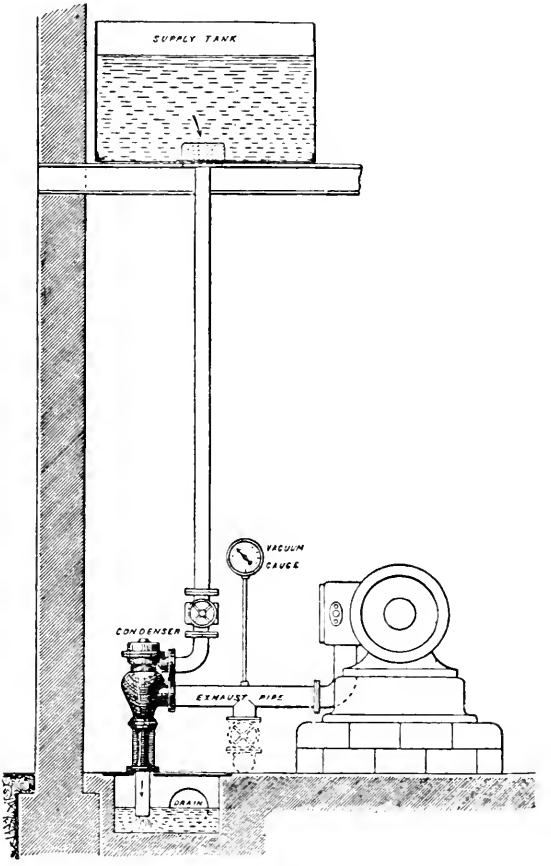

FIG. 204.

noticed that the ejector condenser delivers a stream of water against atmospheric pressure while there is a more or less perfect vacuum in the condenser itself. This is due to the kinetic energy of the jet of water being able to overcome atmospheric resistance. The amount of condensing water required per pound of steam condensed may be calculated in the same way as already described for the jet condenser.

Evaporative Condensers.—The chief difficulty in the way of working engines condensing instead of non-condensing has usually

been the absence of a good supply of water, the quantity required in surface and jet condensers being from twenty to thirty times the weight of the feed-water used. But with the introduction of the evaporative condenser, the absence of a good water-supply is no longer a difficulty, as the same result may be obtained by the action of air on an extended cooling surface. By the use of such an extended external cooling surface, it is possible with a supply of cooling water no greater in amount than that used by the boiler feed, or even less, to secure an efficient vacuum.

The increase of power, or increase of economy of steam for the same power as compared with working non-condensing, as already stated, may be considerable, while after the first cost of the apparatus the working expenses are practically nothing. Thus if the mean effective pressure on the piston without a condenser is 30 lbs. per square inch, and this mean pressure be increased by an additional 12 lbs. due to removal of back pressure by the condenser, we have a gain of 40 per cent., and this gain would probably be a very good interest on the outlay.

The evaporative condenser, as made by Messrs. Ledward & Co. (Fig. 205), consists of a series of pipes arranged and constructed

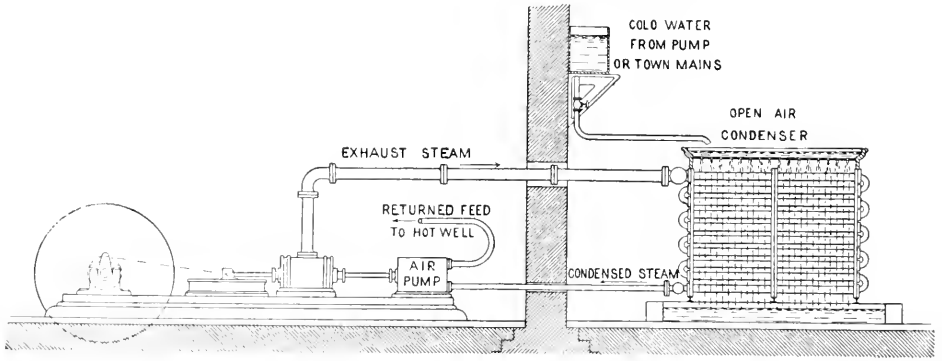

FIG. 205.

so as to afford a large external radiating surface, over which small streams of water are allowed to slowly trickle. The exhaust steam enters the system of pipes at one end, the other end being connected with an air-pump which maintains a vacuum in the pipes. The exhaust steam parts with its heat by evaporation of the water on the external surface of the pipes. A circulation of cooling water is continuously maintained by means of a circulating pump, which feeds from the collecting tank below the system of pipes.

The apparatus just described is in all respects similar to an ordinary surface condenser.

Condensing-water Coolers.—The illustration (Fig. 206) shows an arrangement by Messrs. Worthington for re-cooling the condensing water, which is discharged from an ordinary *jet* condenser. This arrangement is not to be confounded with the *evaporative condenser*

The feature of the arrangement is that the condensation may be maintained continuously by the use of a comparatively small original

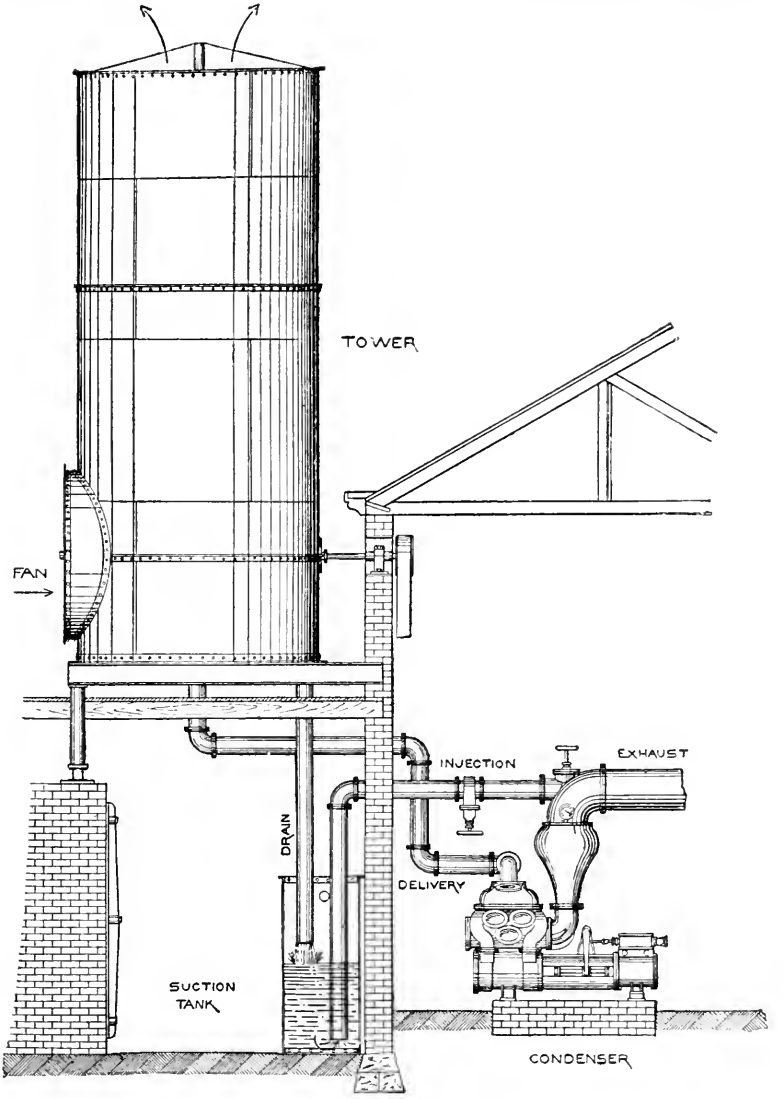

FIG. 266.

supply of cooling water, this water, which is used over and over again, being successively heated in the condenser and cooled in a cooling tower.

The heated water, on leaving the condenser, is raised to the top of the tower, where it is distributed, and cooled by means of a current of air induced by a fan, and finally returned to the storage tank, from which it is again drawn for re-use in the condenser.

A small portion of the water is evaporated in the tower, but the amount so evaporated is less than that of the condensed steam by which the injection water is continuously augmented in the condenser. The cooling surface within the tower is made up of series of hollow cylindrical tiles arranged one above the other but not concentrically. In this way a large cooling surface is provided.

The hot water from the condenser passes up by a pipe through the centre of the tower, and is sprayed over the top row of tiles by distributing pipes, which rotate around the central pipe; the rotation being accomplished by the reaction of the jets of water issuing from the sides of the rotating pipes.

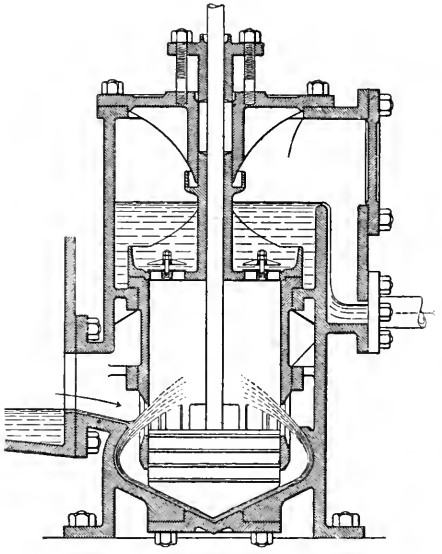

FIG. 206*a*.

The Edwards Air-Pump (Fig. 206*a*).—The feature of this air-pump is that the foot valves, and the bucket valves of the ordinary type of air-pump are dispensed with, head valves only being required. The condensed steam flows by gravity from the condenser into the base of the pump, and from thence it is ejected mechanically by means of a solid conical piston descending upon the base, which is also conical, and which fits the piston when the piston is at the bottom of its stroke.

When the conical piston descends, the water is projected at a high velocity, silently and without shock, through the ports shown at the bottom of the working barrel of the air-pump. The rising piston or bucket closes the ports, traps the air and water, and discharges them through the valves at the top of the barrel. This pump is said to be equally successful at high and low speeds.

CHAPTER XIII.

FEED-WATER HEATERS.

The importance of heating the feed-water supplied to boilers cannot be too frequently impressed, from the point of view not only of economy, but also of the durability of the boiler.

The economy obtained by the use of feed-water heaters arises from the fact:

(1) That the heat used for the purpose of feed heating is usually heat which would otherwise have been wasted: as in exhaust feed heaters and waste chimney-gas feed heaters.

(2) That the evaporative power and efficiency of the boiler are increased when the solid matter dissolved in the feed-water has been first separated and deposited in the feed-heater, rather than on the more effective heating surface of the boiler.

The economy obtained by using heat for feed heating which would otherwise be wasted, may be illustrated numerically as follows:—

Suppose steam supplied from the boiler at 150 lbs. pressure by gauge. Then the total heat per pound from 32° = 1193·6 units; or if the cold feed-water is at 60° F. then the net heat per pound required = {1193·6 − (60 − 32)} = 1165·6 thermal units with a cold feed-supply.

If now the temperature of the feed-water is raised to 200°, we shall require from the boiler furnace, for each pound of water evaporated {1193·6 − (200 − 32)} = 1025·6 thermal units, which is a gain of $\frac{140}{1165·6} \times 100 = 12$ per cent.

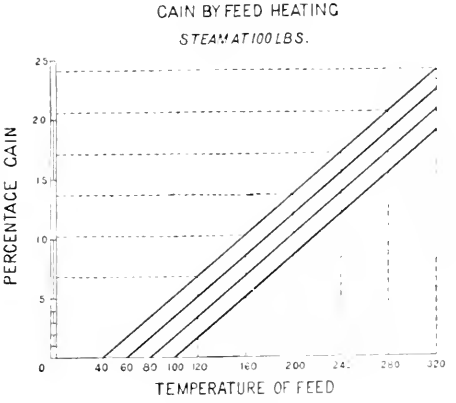

Fig. 207.

The diagram (Fig. 207) shows the extent of the gain by heating feed water. Thus, referring to the inclined line drawn through a feed temperature of 40°, it is seen that by heating the feed to 160°

the gain is over 10 per cent.; or if it is raised to 280° the gain is over 20 per cent. The inclined lines have been plotted from calculation.

A good form of exhaust-steam feed-heater, as made by the Wheeler Engineering Company, is illustrated in Fig. 208.

The exhaust steam enters the lower part of the heater, passing around and among the tubes, and leaves by an exit towards the top of the heater. The space surrounding the tubes in the heater is made large enough to allow a free passage of the steam without increasing back pressure.

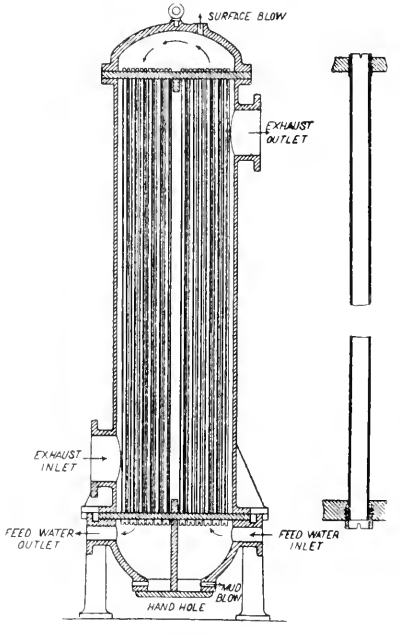

FIG. 208.

The cold feed-water passes through the tubes, entering at the bottom and passing upwards to the top through one half of the tubes, and downwards to the bottom through the other half.

The tubes are screwed into the tube-plate at one end, and at the other end pass through a stuffing box, so that the tubes are free to expand independently of the body of the condenser. The feed-water and that part of the heater containing it, are under boiler pressure, and must therefore be constructed of suitable strength for the purpose. The feed-water is forced into the boiler by the feed pump, through the heater, against the pressure of the boiler.

A feed-water heater may be of value even in condensing engines, the heater being then placed between the engine and the condenser. The gain in such a case is due to the fact that the temperature of the water in the hot well is usually much lower than that corresponding with the pressure of the steam in the exhaust pipe. For example, the water in the hot well may not be more than 90°, while the temperature of the steam in the exhaust pipe may be 150°.

The use of the exhaust steam from auxiliary engines for the purpose of feed-heating is considered good practice.

Feed-heating by Steam from the Receiver of a Compound Engine.[1]— It has been already pointed out that the maximum efficiency of a heat engine is expressed by the equation $\frac{T_1 - T_2}{T_1}$, where T_1 = initial

[1] See an article on "Feed Water Heaters," by Dr. A. C. Elliott, *Engineering*, January 11 1895.

temperature of the working fluid, and T_2 = the temperature due to the back pressure against the piston.

But the efficiency of the steam-engine cycle falls short of this, owing to the heat of the feed not being supplied at the maximum temperature, but along a gradually increasing temperature line. The useful work done falls short of the Carnot cycle by the dotted triangle *aeb* (Fig. 209).

This efficiency, however, may be further approached by the method of abstracting heat from the working steam by stages during expansion, from the high-pressure cylinder downwards towards the condenser, for the purpose of heating the feed-water. The cycle then becomes similar to that of the engine of Dr. Stirling, who applied the regenerative principle of adding and subtracting heat to and from the working fluid by means of a regenerator. Thus, in Fig. 210, if, instead of expansion along *ct* from T_1 to T_2, heat is abstracted for

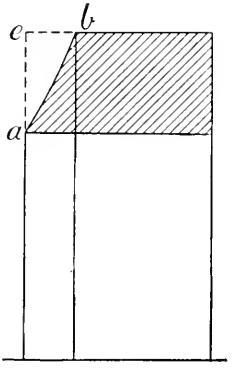

Fig. 209.

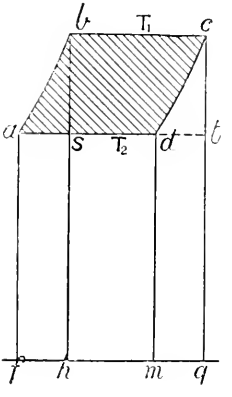

Fig. 210

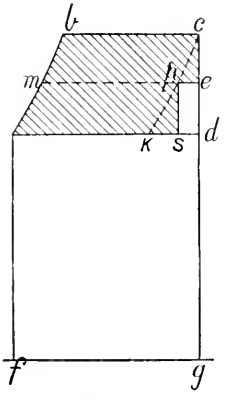

Fig. 211.

the purpose of feed-heating equal in amount to the area *mdcg;* then, if the heat, *mdcg*, so abstracted be transferred to the working fluid, and the amount transferred per pound be equal to that required to raise the temperature of the 1 lb. of feed-water from T_2 to T_1, namely, *fabh:* then the net heat added = area *hbcg;* and the net heat rejected = area *fadm* = area *hstg;*

$$\text{and the efficiency} = \frac{abcd}{fabcdm} = \frac{sbct}{hbcg} = \frac{T_1 - T_2}{T_1}$$

The system introduced by Mr. Weir of heating the feed-water by steam taken from the receiver between the cylinders of compound engines is an approximation to the same result. Thus, instead of the expansion being carried along the adiabatic line, *cd*, from *c* to *d*, it expands from *c* to *e* (Fig. 211) in the high-pressure cylinder, and then a portion of the dry steam, namely *ep* ÷ *em*, is extracted from the receiver to heat the feed-water. If an indefinite number of small

portions be extracted, then the irregular line, *ceps*, will approach nearer and nearer to the dotted line, *ck*, and the efficiency becomes equal to $(T_1 - T_2) \div T_1$.

Taking a numerical example: Compare the efficiency of a triple-expansion engine with and without feed-heating, the feed being heated in the former case by steam from the receiver between the intermediate and low-pressure cylinders (Fig. 212).

Initial absolute temperature of steam $T_1 = 842°$
Temperature in exhaust-pipe $T_2 = 624°$
Temperature in receiver $R_2 = T_3 = 740°$
Absolute temperature of air-pump delivery $= 590°$

Suppose 10 per cent. of the steam be taken from receiver R_2 at temperature T_3 to heat the feed-water.

1. Efficiency *without* feed-heating:—

To find the value of U = the number of units of heat converted

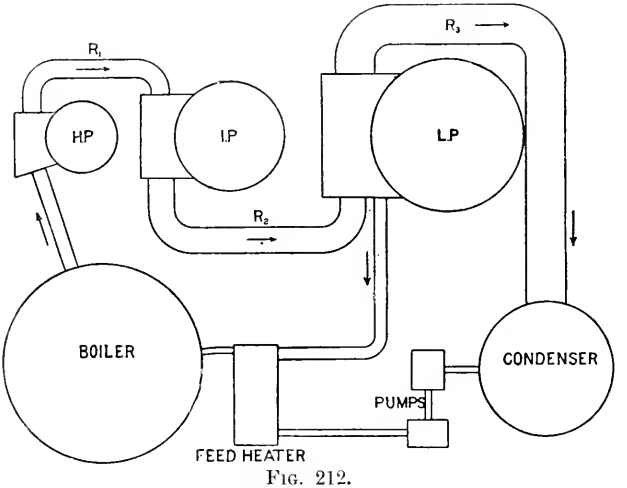

FIG. 212.

into work with steam working from T_1 and expanding down to T_2, and exhausting at that temperature.

Total work done *without* feed-heating = U

$$= (1437 - 0{\cdot}7\,T_1)\frac{T_1 - T_2}{T_1} + (T_1 - T_2) - T_2 \log_e \frac{T_1}{T_2} \text{ (see p. 54)}$$

$$= (847{\cdot}6 \times 0{\cdot}2589) + 218 - 187{\cdot}2$$

$$= 250{\cdot}24$$

Also, total heat-units supplied per pound of steam—

$$= H = 1437 + 0{\cdot}3T_1 \text{ from absolute zero}$$
$$= 1082 + 0{\cdot}3t \text{ from } 32° \text{ Fahr.}$$

Or from feed-temperature 590° absolute

$$= (1437 + 0{\cdot}3T_1) - 590 = 1099{\cdot}6 \text{ units}$$

$$\text{therefore efficiency} = E = \frac{U}{H} = \frac{250{\cdot}24}{1099{\cdot}6} = 0{\cdot}22819$$

2. Efficiency *with* feed-heating :—

If U = work done per pound working from T_1 to T_2
U_a = " " " T_1 to T_3
U_t = total work done

Then, since $\frac{1}{n}$ lb. of the steam passing through the engines is removed at T_3, the total work done per pound

$$= U_t = \frac{n-1}{n} U + \frac{1}{n} U_a$$

But the value of U has been found, and it only now remains to find the value of U_a, the process being exactly the same as in finding U, substituting T_3 for T_2 throughout; thus, to find U_a, or the work done per pound of steam working between the temperatures T_1 and T_3—

$$U_a = (1437 - 0{\cdot}7\,T_1)\frac{T_1 - T_3}{T_1} + (T_1 - T_3) - T_3 \log_e \frac{T_1}{T_3}$$
$$= 847{\cdot}6 \times 0{\cdot}12114 + 102 - 95\,608$$
$$= 109{\cdot}072 \text{ heat-units.}$$

Total work done (U_t) by the steam when $\frac{1}{n}$ is extracted from the receiver; and when $n = 10$; then—

$$U_t = \frac{n-1}{n} U + \frac{1}{n} U_a$$
$$= 0{\cdot}9 \times 250{\cdot}24 + 0{\cdot}1 \times 109{\cdot}072$$
$$= 236{\cdot}123 \text{ heat-units.}$$

But the work done when no steam was withdrawn from the receiver was equal to 250·24, and is, of course, greater than when steam was withdrawn from the receiver. Before, however, we can compare the efficiencies of the two systems we must find the net heat *supplied* in each case, and for this purpose, in the latter case, we must find the temperature (F_1) of the hot feed obtained by this system of feed-heating.

Thus, if F be the temperature of the unheated feed-water, and $1437 + 0{\cdot}3T_1$ = the total heat of steam when temperature is expressed in absolute units, we have—

$$F_1 = F\left(\frac{n-1}{n}\right) + \frac{1437 + 0{\cdot}3\,T_1 - U_a}{n}$$
$$= (590 \times 0{\cdot}9) + (1689{\cdot}6 - 109{\cdot}072) \times 0{\cdot}1$$
$$= 689{\cdot}05$$

Then *net heat supplied* with the hot feed from receiver = H_1, and

$$H_1 = 1437 + 0{\cdot}3T_1 - F_1$$
$$= 1000{\cdot}55$$

We can now compare the efficiencies—

(1) Efficiency without hot feed = 0·22819 as already found.

(2) Efficiency with hot feed = $E_1 = \frac{U_t}{H_1} = \frac{236{\cdot}123}{1000{\cdot}55} = 0{\cdot}236$

There is, therefore, a gain in favour of the system of heating the feed-water by steam withdrawn from the receiver in the proportion of 0·236 : 0·22819, or a gain of 3·4 per cent.

The economy obtained by feed-heating may be well seen by reference to the temperature-entropy diagram (Fig. 213). Thus, taking the data used in the above problem, the diagram represents first the heat in the feed-water which is included within the area to the left of *ha*. The temperature of the water from the hot well is given as 590° Fahr. absolute. This is seen to be 34° below the temperature of the exhaust steam. It should here be noticed that the temperature of the condensed steam passing away through the air-pump is always below that due to the pressure in the condenser, in consequence of the cooling due to the excess circulating water passing through the condenser. This excess is necessary, otherwise, the condensed steam in the condenser being near its boiling-point, the air-pump would not work.

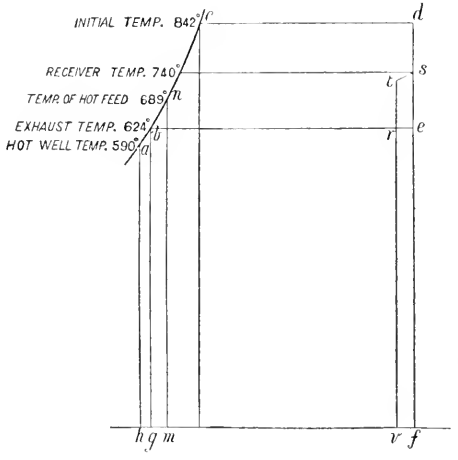

FIG. 213.

With the conditions already described, the heat required per pound of steam, when the feed is drawn direct from the condenser, is given by the area *hacdfh*. By the arrangement described of supplying steam from the receiver to heat the feed, the temperature of the feed has been raised, and the total heat now required to generate 1 lb. of steam is reduced by the area *hamnh*, making the net heat required = *mncdfm*. This has been accomplished at the expense of a loss of heat = *vtsfv*, or a loss of useful work = *rtse*. The net gain has been shown to be 3·4 per cent.

Feed-water Filters.—The chief objection to the use of condensed steam as a boiler-feed is the presence of oil carried out of the cylinders with the exhaust steam, and which, if pumped into the boilers, may cause serious trouble through deposit on the furnace plates. Too much care cannot be taken to prevent oil passing into the boilers, and, for the purpose of separating the oil, the feed-water is passed through a feed-water filter.

If a sample of unfiltered feed-water from the hot well of a surface condenser be drawn off, it will be seen to have a slightly milky

appearance, and to be soapy to the touch. When this water is passed through a good filter, the oily constituents are almost entirely removed.[1]

These filters consist essentially of a series of layers of filter-cloths and fine grid-wire meshes, through which the feed-water is either drawn or forced by the feed-pumps, and is thereby cleansed of suspended matter.

The filtering material meantime becomes gradually laden with a dark viscous muddy deposit, consisting of heavy oils and certain mineral matter. This deposit is periodically removed from the filter by cleaning or renewal of the filtering medium.

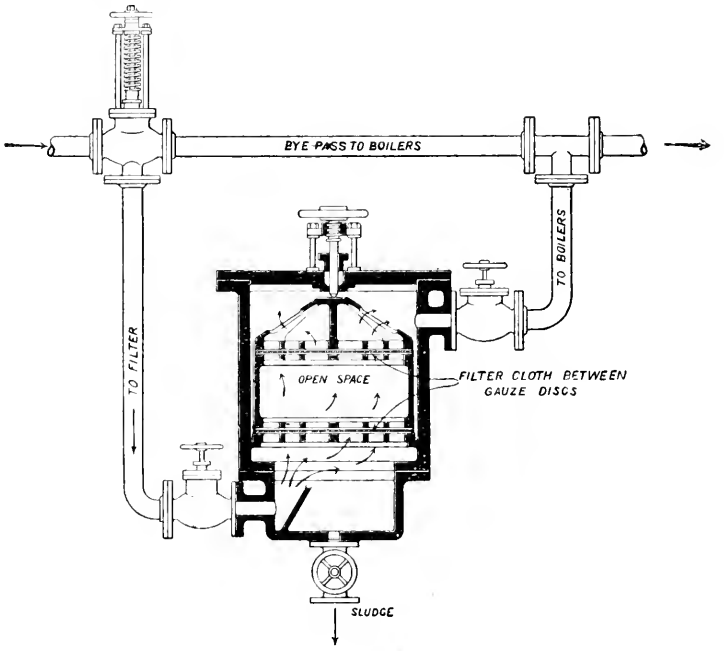

FIG. 214.

The filter, of course, removes solid matter only; the impurities dissolved in the feed-water pass forward into the boiler unless removed in a feed-water heater or by chemical means. The efficiency and duration of a filter depend upon the nature of the filtering material and upon the thickness or number of strata through which the feed-water passes. The filter should be placed at the point of lowest possible temperature of the feed-water, for the lower the temperature the more viscous and the less fluid is the condition of the oily matter, and the more easily it is separated from the feed-water.

[1] See article by Mr. N. Sinclair, in *Cassier's Magazine*, October, 1897.

Fig. 214 is a type of feed-water filter made by the Harris Filter Company.[1] The arrangement speaks for itself.

To reduce the amount of oil returned to the condensers from the engines, regulations have been introduced, in some cases of marine practice, prohibiting the use of oil in the cylinders, not only of the auxiliary, but also of the main, engines; and experience has shown

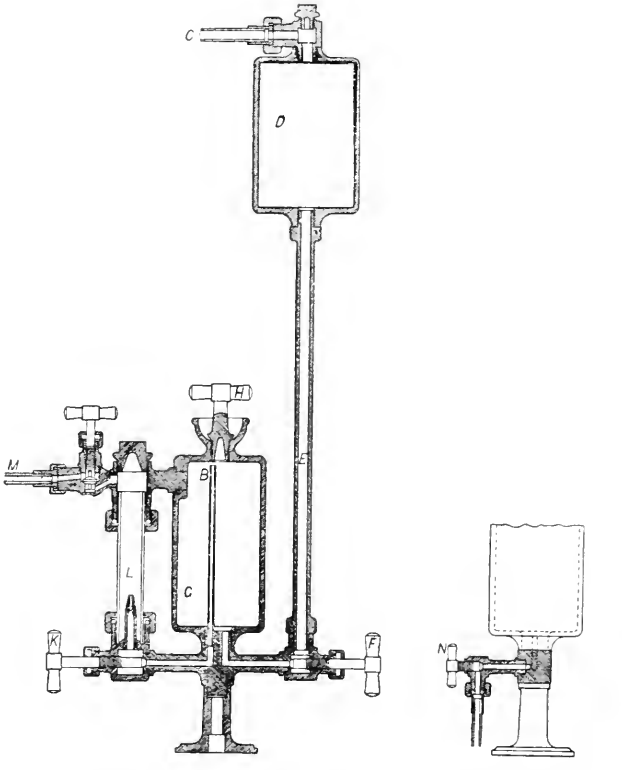

Fig. 215.—C = connection from main steam-pipe; D = condenser; E = pipe for transmitting pressure of head of water in condenser D to oil-chamber; G = oil-chamber; H = plug valve for filling oil-chamber; K = valve for regulating delivery of oil; L = sight-feed glass tube, showing delivery of oil in drops; M = connection to steam-chest of engine, or to steam-pipe, for delivering the oil; N = valve for running off condensed water from oil-chamber.

that vertical engines may be worked without any lubrication of the pistons except by the water in the cylinder; but there is certainly a loss of efficiency in most cases, due to increased friction.

The Sight-feed Lubricator has been a most valuable invention, as it provides for a regular supply of oil to the cylinder, and in

[1] From *Cassier's Magazine*, October, 1897.

minimum quantities. The diagram (Fig. 215) illustrates Grandison's condenser type of sight-feed lubricator. This lubricator acts by the pressure obtained from the head of water contained in the condenser D and the vertical pipe E, connecting it to the bottom of the oil-chamber G. When first fixed, the condenser and pipe are filled by hand, or allowed to fill by the condensation of steam admitted by the pipe C attached to top of the tube. The oil-chamber is filled with oil through the plug valve H, and the sight-tube L is filled with water. The valves F and K at the bottom of the condenser-tube and sight-tube respectively are then opened, the condensed water enters the bottom of the oil-chamber, and by its pressure displaces the oil, which flows from the top down the small centre tube, and is forced through the nozzle inside the glass tube L. The oil leaves the nozzle in drops, and ascends through the water in the tube, and thence through the pipe to the steam-chest of the engine. The rate of feed or number of drops is regulated by the valve K at the bottom. When the oil is exhausted, it is replenished by first closing the inlet and outlet valves, removing the plug valve H, and running the condensed water off by the small valve, N, at the bottom. This valve is then closed, and the chamber refilled with oil.

CHAPTER XIV.

GOVERNORS.

Regulation of the Speed of the Engine.—Variation in speed of an engine may be due to variation of load on the engine, or to variation of mean pressure of the steam in the cylinder. When the variation is of the nature of a gradual increase or decrease of speed extending over a number of revolutions, such variation is controlled by the governor. When, however, the speed of rotation tends to vary during the period of a single revolution, due to variable turning effort on the crank-pin, or to sudden change of load, as in a rolling mill, such variation is regulated by the flywheel.

The object of the governor is to maintain as nearly as possible a uniform speed of rotation of the engine independently of change of load and of boiler-pressure.

None of the governors applied to steam-engines are able to accomplish this result perfectly, for, being themselves driven by the engine, they cannot begin to act until a change of velocity has first occurred to give motion to the regulating mechanism.

In practice, however, when any change of velocity does take place, a good governor instantly acts and prevents anything more than a small alteration of speed.

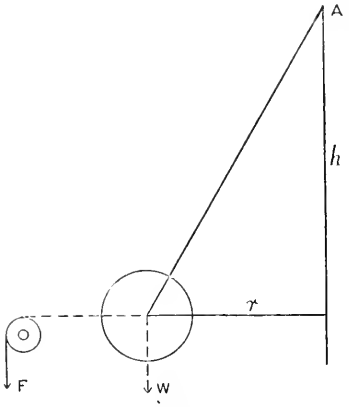

FIG. 216.

Governors regulate the speed by regulating the mean pressure of the steam acting on the piston. This is usually done in one of two ways —

1. By throttling; that is, by varying the initial pressure of the steam supplied, the point of cut-off remaining constant.

2. By variable expansion; that is, by varying the point of cut-off in the cylinder, the initial pressure remaining constant.

The principle of action of most governors depends upon the change of centrifugal force when the rate of rotation changes.

In the case of a simple revolving pendulum, let W = weight of

ball, and F = centrifugal force due to speed of rotation, h = height of cone of revolution, and r = radius of rotation of ball. Then, if the speed of rotation is constant, the ball remains at a constant distance, r, from the axis of rotation by the action of the centrifugal force F. The measure of the force necessary to maintain the ball at this constant distance, r, may be shown by means of a weight, F, hanging over a pulley, as shown (Fig. 216). Then, taking moments about A—

$$F \times h = W \times r$$

So that, knowing the values of W, r, and h for any given governor, and neglecting friction, F can at once be found by calculation.

Fig. 217 illustrates a simple type of pendulum-governor, the action of which, as will be seen by the figure, is, by the rotation of the balls, to cause a movement of the sliding-sleeve E upwards or downwards on the spindle, and thus give motion to the bell-crank lever C, which, in this case, regulates the opening and closing of the valve through which the steam is supplied to the engine.

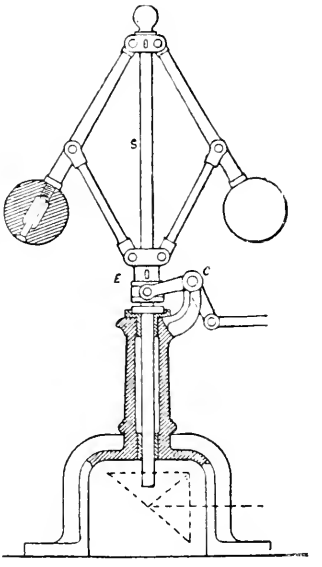

Fig. 217.

Suppose a governor of the kind described is supplied for the purpose of attachment to an engine. There are, in the first place, at least two important points to be determined—

1. At what speed must the governor be made to run. This information is needed in settling the sizes of the pulleys or wheels by which the governor is driven from the engine-shaft.

2. Through what range of speed will the governor run during the movement of the sleeve from its bottom to its top position. This must be known, because for any other speeds outside this range the governor may rotate on its axis, but it will in no sense be a governor, and will serve no purpose whatever.

A certain speed of rotation must be reached before the balls move from their position of rest. When this speed is reached, the governor begins to act.

If, when the speed increases, the governor reaches its top position, and in doing so does not close the steam-supply to the engine, then the speed may go on increasing, but the governor is no longer acting as a governor. It acts as a governor only between the range of speed that belongs to it while moving from its bottom to its top position.

Let Fig. 218 represent the configuration of the governor when in its bottom and top positions respectively.

$$\text{Then } F \times h = W \times r$$

$$F = W\frac{r}{h}$$

and F is therefore known for both positions, r and h being determined by measurement, and W being the weight of one ball (omitting for simplicity the weight of the arms). Or F may be determined by experiment, as shown in Fig. 216.

Having found F, we have now to find the speed of rotation which will generate a centrifugal force equal to F.

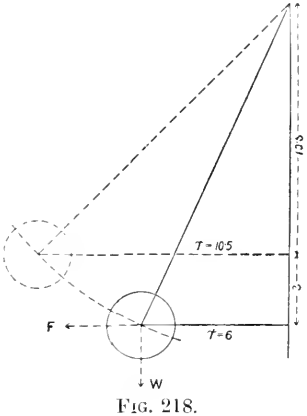

Fig. 218.

It is shown in works on theoretical mechanics that centrifugal force—

$$F = \frac{mv^2}{r} = \frac{Wv^2}{gr} = \frac{4\pi^2 n^2 r W}{g}$$

$$\text{and } n = \frac{1}{2\pi}\sqrt{\frac{Fg}{Wr}} = \frac{1}{2\pi}\sqrt{\frac{g}{h}}$$

where n = revolutions of the governor per second, and r = radius of rotation in feet.

This may be conveniently written—

$$F = WrN^2 \times 0{\cdot}00034$$

where N = revolutions per minute; r = radius in feet.

We may now find the speed N of the governor for the two positions shown in the sketch, Fig. 218.

1. Suppose W = 5 lbs., and taking first the lowest position of the governor balls, and finding the values of r and h by measurement—

$$F \times h = W \times r$$
$$F \times 13{\cdot}5 = 5 \times 6$$
$$F = 2{\cdot}22 \text{ lbs.}$$
$$\text{Then } N^2 = 2{\cdot}22 \div (5 \times 0{\cdot}5 \times 0{\cdot}00034) = 2614$$
$$N = 51 \text{ revolutions per minute}$$

2. To find the speed in the upper position—

$$F \times h = W \times r$$
$$F \times 10{\cdot}5 = 5 \times 10{\cdot}5$$
$$F = 5$$
$$N^2 = 5 \div (5 \times {\cdot}875 \times 0{\cdot}00034) = 3361$$
$$N = 58 \text{ revolutions per minute}$$

Here the range of speed of the governor is from 51 revolutions per minute in its bottom position to 58 revolutions in its top position. The effect of friction in the working parts of the governor will be referred to later.

Height of Cone of Revolution.—The relation between the height

h of the cone of revolution (Fig. 219) and the speed of the governor is obtained from the following equation :—

$$F \times h = W \times r$$

$$\text{since } F = \frac{Wv^2}{gr}$$

$$\frac{Wv^2}{gr} \times h = W \times r$$

$$\therefore h = \frac{gr^2}{v^2} \text{ ft.}$$

$$\text{But } v = 2\pi rn = 2\pi r\frac{N}{60}$$

where n = revolutions per second, and N = revolutions per minute ;

$$\therefore h = \frac{gr^2}{v^2} = \frac{gr^2 \times 60 \times 60 \times 12}{4\pi^2 r^2 N^2} = \frac{35200}{N^2} \text{ in.}$$

If the value of h for a simple pendulum governor be calculated for different speeds, it will be found that while the change of height,

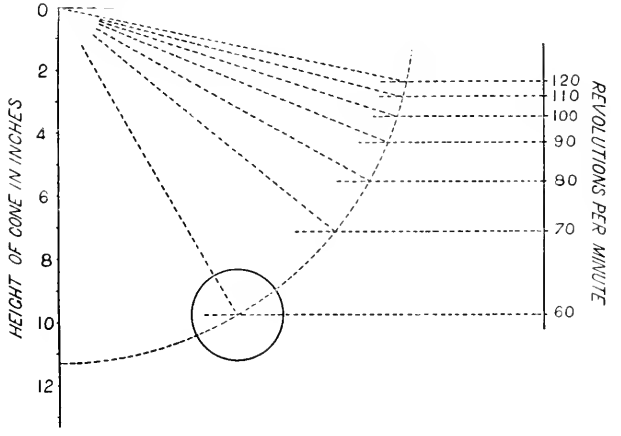

Fig. 219.

h, for a change of speed may be comparatively large when the speed of the governor is low, when the speed is increased the change of height for a change of speed becomes so small as to be of no practical value.

Thus, for a change of speed from 51 to 58 revolutions we have seen there is a change of height of 3 in., which gives a movement of the sleeve of the governor sufficient to suitably open or close the throttle-valve by means of levers ; but when the speed is increased to 200 revolutions, the height $h = 35{,}200 \div (200 \times 200) = 0{\cdot}88$ in. ; and for a speed of 300 revolutions, $h = 35{,}200 \div (300 \times 300) = 0{\cdot}39$ in. ; that is, a change of height of $0{\cdot}88 - 0{\cdot}39 = 0{\cdot}49$ in., or about $\frac{1}{2}$ in. is all

the movement of the sleeve which can be obtained for a change of speed from 200 to 300 revolutions. This, of course, renders such an arrangement useless for the purpose of governing at high speeds.

The value of h may be written—

$$h = \frac{g}{\omega^2}$$

where $\omega = \frac{v}{r}$ = angular velocity in radians,

$$\text{and } \omega = \frac{2\pi N}{60} \text{ radians per second}$$

where N = revolutions of the governor per minute.

Thus, if the revolutions of a simple Watt governor are 120 per minute—

$$h = \frac{32{\cdot}2}{\left(\frac{2\pi N}{60}\right)^2} = 0{\cdot}204 \text{ ft.} = 2{\cdot}448 \text{ in.}$$

The height h varies inversely as the square of the revolutions only, and does not depend upon weight of ball or length of arm; thus the height h will be constant at a constant speed for either of the governors A, B, or C (Fig. 220).

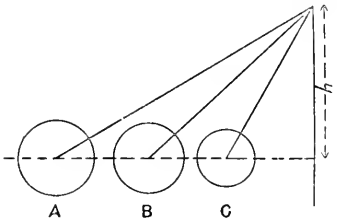

FIG. 220.

Loaded Governors.—It has been seen that the simple pendulum governor is unsuitable for high speeds, because the difference of height $h_1 - h_2$ for a given change of speed, rapidly becomes too small, as the speed of rotation increases, to be of practical service in giving motion to the steam-regulating mechanism.

If now a weight be added which increases the load on the governor, but does not increase the centrifugal force, then a large movement of the sleeve may be obtained with a high speed of rotation, and at the same time a much more powerful type of governor is obtained than when no central weight is used.

A loaded governor running at a high speed may be constructed with comparatively small rotating weights, because the centrifugal force increases as the square of the number of revolutions and only directly as the weight of the balls, and the centrifugal force therefore rapidly increases with the speed.

Fig. 221 is a drawing of a model of a Porter governor with which many useful experiments may be made, and which serves to illustrate the principles involved in governor design, including the values of F for varying positions of the balls, and for varying weights on the sleeve, from which the corresponding speed may be calculated.

In a Porter governor as illustrated by Fig. 222, it will be seen that

the load on the sleeve does not itself add anything to the centrifugal force, though it necessitates the generation of a large centrifugal force in the rotating balls before the load on the sleeve can be moved.

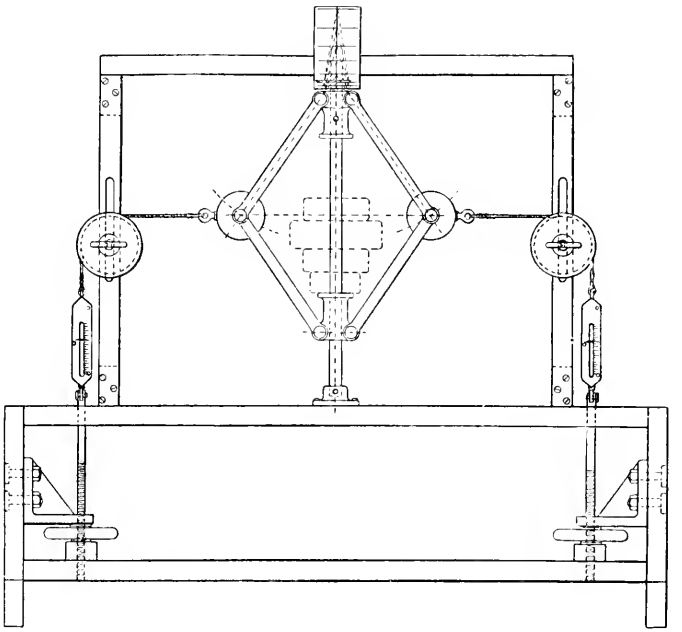

Fig. 221.

If a load had been put on the balls as in Fig. 223, then the vertical movement of the balls and the sleeve would be equal, but in Fig. 222 the vertical movement of the central load is twice that of the ball.

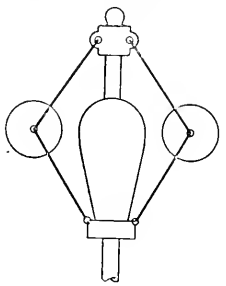

Fig. 222.

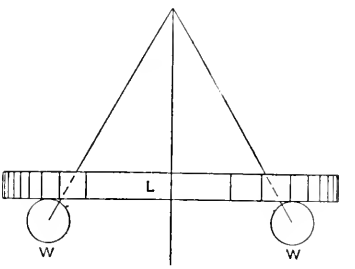

Fig. 223.

Let K = the velocity ratio of the vertical movement of the load L to the vertical movement of the ball W.

Then the moment Fh of the centrifugal force of the rotating ball

has to balance the moment, not only of its own weight (Wr), but also its share of the central load. Thus, referring to Fig. 223, if the central load were attached to the governor as shown, then each weight W would carry half L, and the value of $F = \left(W + \frac{L}{2} \right) \frac{r}{h}$. But since in the Porter governor the central load is moved through a vertical distance = K times that moved through by W, then, by the principle of virtual velocities—

$$F = \left(W + K\frac{L}{2} \right) \frac{r}{h}$$

But in practice it is usual to make K = 2;

$$\text{then } F = (W + L)\frac{r}{h}$$

But F also $= \frac{4\pi^2 n^2 r W}{g}$, where W = weight of one ball; from which we have—

$$n = \frac{1}{2\pi}\sqrt{\frac{(W + L)g}{Wh}} \text{ revolutions per second}$$

Comparing the value of n here given for the loaded governor with the value of n given for the simple governor, we have the ratio—

$$\frac{1}{2\pi}\sqrt{\frac{(W + L)g}{Wh}} : \frac{1}{2\pi}\sqrt{\frac{g}{h}}$$

$$\text{or as } \sqrt{W + L} : \sqrt{W}$$

The equivalent value of h in feet for a loaded governor, where the central load L has double the vertical movement of the ball, may also be written thus:

$$h = \frac{W + L}{W} \times \frac{g}{\omega^2}$$

$$= \frac{W + L}{W} \times \frac{g}{\left(\frac{2\pi N}{60} \right)^2}$$

These same results, and many other useful facts connected with governors, may be shown graphically, as will now be explained. Let the triangle abc, Fig. 224, represent the triangle of forces acting at the centre of the ball of the governor when the governor is at rest; ab = weight of ball; bc = horizontal pressure of ball against point of rest as shown; and ac = tension in arm, all to the same scale representing pounds.

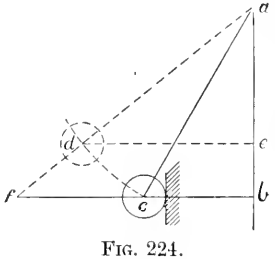

FIG. 224.

When the governor begins to rotate and to increase in speed, the centrifugal force F of the ball increases, gradually reducing the amount of the

horizontal pressure of the ball against the point of rest until the two are equal, after which any further increase of speed will cause the ball to move outwards along the arc *cd*, say to *d*. Then *ade* is the triangle of forces in the new position of the arm, and *ae* = weight of ball to a new scale. Using, however, the same scale as before, then *ab* is still the weight, and *bf* to the same scale = F. If *ac* and *ad* are the two extreme positions of the governor arm, then the speed corresponding to these positions can be calculated from the values of F, given respectively by *bc* and *bf* to the scale of pounds ; and, taking for *r* the values *bc* and *de* to a scale of feet—

$$F = WrN^2 \times 0{\cdot}00034$$

In Fig. 225, let *ab* = weight of one ball, and *bd* to the same scale = weight of central load L on sleeve, as in the Porter governor. The whole value of L is taken, and not half L, for reasons explained above. Then, when the speed of the governor generates a centrifugal force = *bc*, if there were no central load, the governor ball is just about to rise, and to make an angle greater than *cab* with the spindle *ab*. But, with the central load L and the speed as before, the centrifugul force *bc* = *df*; the effect is equivalent to the arm *ac* lying in position *af*. Produce *ac* to meet *de* in *e*. Then *de* is the centrifugal force which must be obtained from the rotating ball before the governor will begin to move from its position of rest, *df* being the centrifugal force to balance the weight of the ball, and *fe* to balance the central load.

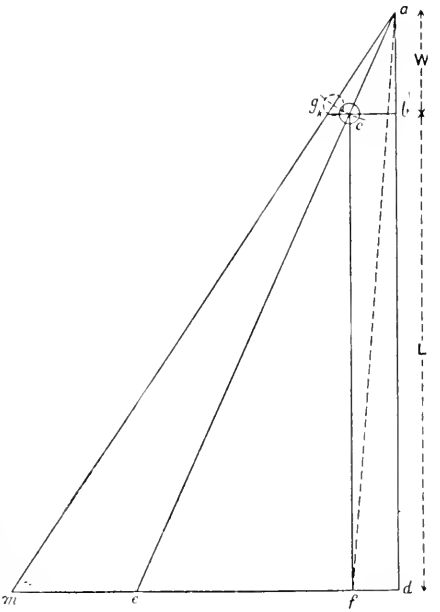

Fig. 225.

If *aj* be the position of the outer limit of the arm, and, if *aj* be continued to *m*, then *dm*, measured from the diagram to the same scale of pounds as *ab*, is the centrifugal force necessary to place the governor arm in this position, and the range of speed of the governor may be calculated, knowing the values of F in pounds, namely, *de* and *dm* for the respective positions of the arm.

In Fig. 225, $cb = F_1$, and $cd = F_2$, these being respectively the centrifugal force without and with central load when the ball arm makes the angle *cab* with the spindle. But F varies as the square of the speed (N) : then—

$$F_1 : F_2 :: N_1^2 : N_2^2$$
$$\text{and } cb : ed :: ab : ad$$
$$N_1^2 : N_2^2 :: W : W + L$$
$$N_1 : N_2 :: \sqrt{W} : \sqrt{W + L}$$

Similarly, $kb = F_3$ and $md = F_4$, these being respectively the centrifugal force without and with a central load, when the ball-arm makes an angle gab with the central spindle.

From the values of F so obtained, the values of N can be determined for any proportions of weight to central load.

If the central load be increased or diminished by an amount $= w$, then the change of speed N_1 to N_2 for a given position of the governor arm is obtained from the ratio—

$$N_1 : N_2 :: \sqrt{W + L} : \sqrt{W + L \pm w}$$

Sensitiveness.—The sensitiveness of a governor may be defined as the ratio of variation of speed $n_1 - n_2$ to mean speed n, where n_1 and n_2 are the range of speed permitted by the governor, and the sensitiveness per cent. $= \dfrac{n_1 - n_2}{n} \times 100$.

Taking this definition of sensitiveness, and neglecting the effect of the friction of the governor, and the working parts connected with it, it will be found that the addition of a central load has theoretically no effect upon the sensitiveness of a governor, though since, in practice, the friction of the governor and its gear may be considerable, the sensitiveness of the loaded governor is actually much greater than that of the unloaded one.

Thus, if the range of speed of a governor of the Porter type, but unloaded, be from 60 to 70 revolutions, then, if a central weight = 8 times the weight of one ball be added to the central spindle, we have, for the speed of the governor in the lowest position—

$$N_1 : N_2 : \sqrt{W} : \sqrt{W + L}$$
$$60 : N_2 : \sqrt{1} : \sqrt{9}$$
$$\text{or } N_2 = 180 \text{ revolutions}$$

and for the highest position of the ball—

$$70 : N_2 \sqrt{1} : \sqrt{9}$$
$$\text{or } N_2 = 210 \text{ revolutions}$$

That is, with the unloaded governor the sleeve moved through its full movement between the speeds of 60 and 70 revolutions, while the loaded governor gave the same movement of the sleeve between the speeds of 180 and 210 revolutions.

Applying now the above formula, we have—

(1) $\dfrac{70 - 60}{65} 100 = 15{\cdot}38$ per cent

(2) $\dfrac{210 - 180}{195} 100 = 15{\cdot}38$ per cent.

That is, the sensitiveness is the same in both cases when friction is

omitted. But when friction is included, the loaded governor is the more sensitive type, because the friction is a smaller proportion of the total forces acting on the governor when loaded than when unloaded.

About 2 per cent. variation of speed of the engine is the practical limit of variation with good governors. A less percentage than this requires a very large flywheel.

Diagram of Forces for the Porter Governor.—Fig. 226 shows a Porter governor with another form of the diagram of forces drawn for the two limiting positions of the balls. The object is to find the

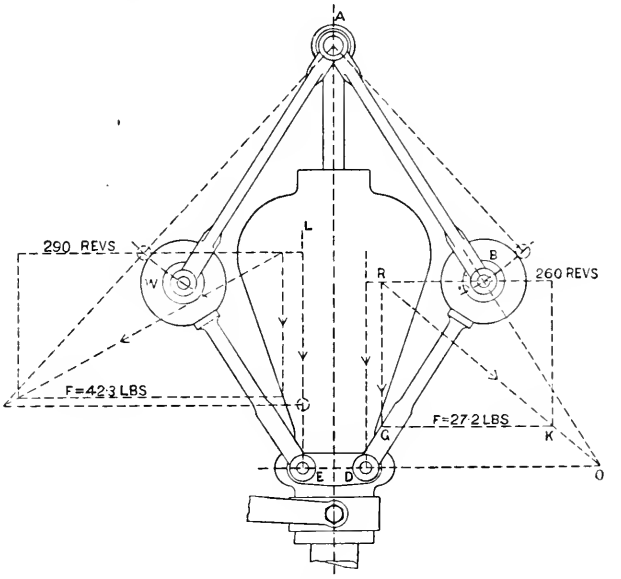

FIG. 226.

centrifugal force F at these two positions, and to find therefrom the maximum and minimum speed of the governor.

In the example taken, the weight W of each ball is 3 lbs.; the central load L is 40 lbs.; in the lowest position the radius $r = \frac{4{\cdot}72}{12}$ ft., and in the highest position $r = \frac{6{\cdot}05}{12}$ ft.

In order that the system of forces acting on the lever BD joining the ball and sleeve may be in equilibrium in any position of the governor, the resultant of the forces acting upon it must pass through its virtual or instantaneous centre of rotation.

Produce the lines AB and ED to meet in O. Then O is the instantaneous centre, and the resultant of the weights and centrifugal force acting on this side of the governor must pass through the point O.

The vertical resultant $= W + \frac{L}{2}$, and this force RG is set down to any convenient scale from the horizontal line through B. The position of this resultant of the vertical forces is obtained by dividing the horizontal distance between the verticals through B and D in the proportion of the weights acting through B and D. In the present case $BR = \frac{20}{23}$ of the horizontal distance.

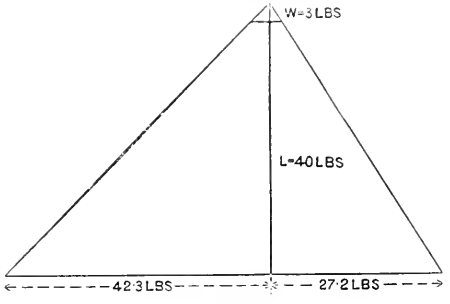

FIG. 227.

The centrifugal force is horizontal, and may be taken as acting through the centre of the ball B. The resultant of the centrifugal and vertical forces must act through O. Join RO; and from G, the extremity of the vertical resultant draw a horizontal to meet RO or RO produced in K. Then GK is the centrifugal force required in pounds to the same scale as the scale of weight in RG. From this the number of revolutions required to balance the governor in this position may be at once calculated as before.

A similar process is adopted for the other position of the governor shown. The centrifugal force is again determined, and the speed obtained.

Thus the range of speed of the governor is known.

In the present example, in the lower position, the force F = 27·2 and the revolutions N = 260; in the higher position, F = 42·3 and N = 290. The same result is shown by drawing the vertical line of Fig. 227 to the scale of weights, namely, W = 3 lbs. and L = 40 lbs., and drawing lines from the apex parallel to the arms of the governor; then the horizontal line completing the figure for any required angularity of arm gives the value of F when measured with the same scale as the line of weights.

Stability of the Governor.—A governor is said to be *stable* or *static* when it maintains a definite position of equilibrium at a given speed; it is said to be *unstable* or *astatic* when at a given speed it assumes indifferently any position throughout its range of movement. The condition of stability is that F must increase more rapidly than r when the ball moves outwards.

If F increases or decreases proportionally as r increases or decreases, then the speed n is constant for all positions of the ball.

In the diagram (Fig. 228) the governor ball is shown in three different positions, with radii *de*, *fb*, and *gk* respectively. If *ab* be the common scale of W, the weight of the ball, then the triangles *acb*, *afb*, and *aib* are respectively the triangles of forces, and *cb*, *fb*, and *ib* respectively are the centrifugal forces for the positions *d*, *f*, and *g* of the balls.

In Fig. 229, if the governor arm were made to slide in the cap at a, then the centrifugal force F would vary as the radius r, and the

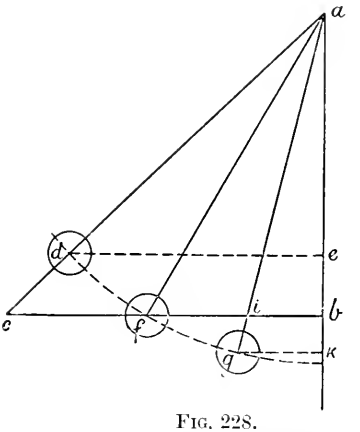

Fig. 228.

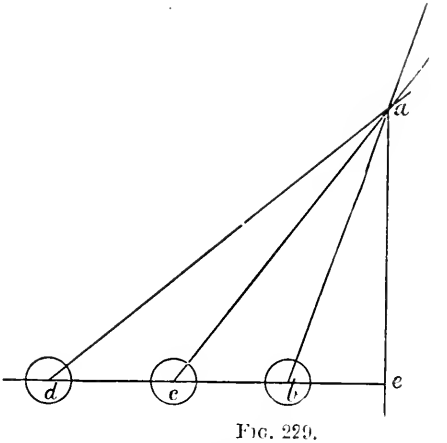

Fig. 229.

lengths de, ce, and be respectively represent both the radius r and the centrifugal force F.

To compare these two cases, Figs. 228 and 229, by plotting the results and superposing them, let Fig. 230 be constructed, making the ordinates = F and the abscissæ = r. We shall then have for Fig. 229 the line joining the intersections of F and r a straight line, namely, OS. But for Fig. 228 we notice that the values of F and r when plotted do not coincide with the straight line. Thus, for the position f of the ball (Fig. 228), fb = F = r; but for position d of the ball, de, the radius, is less than cb, the centrifugal force; also gk, the radius, is greater than ib, the centrifugal force.

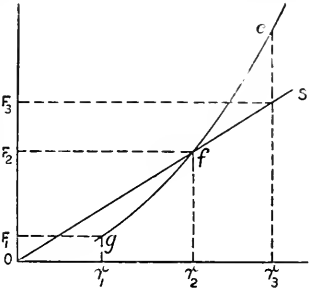

Fig. 230.

Let or_3 (Fig. 230) = radius de (Fig. 228), and let r_3c (Fig. 230) = centrifugal force cb (Fig. 228), and so on for the other points. Then the line joining the respective intersections will be a curve of the form cfg.

The relation which the curve cfg bears to the straight line oS, drawn from the origin o is important. Thus, since the values of F for the curve cfg increase more rapidly than the values of r, the curve is steeper than the straight line oS, in which F varies as r.

The angle made by a tangent to the curve cfg at f, with a line (of) joining the point of contact f to the origin o, is a measure of the stability of the governor.

If the curve cfg coincide with the line oS, then the governor

would be in neutral equilibrium. If the curve crossed the line oS in the other direction—that is, if the tangent to the curve made a less angle with the horizontal than the line joined to the origin o, then the governor would be in unstable equilibrium.

Power of a Governor.—The power of a governor is measured by the work done by the governor in lifting through its full range of movement, and it is equal to the mean centrifugal force exerted multiplied by the range $r_2 - r_1$ in feet through which the force acts in moving the governor through its full range.

The power of a governor, and the effect upon the power of additional loading, can be well seen by plotting a curve with F for ordinates and r for abscissæ.

Such a curve can be plotted for an actual governor, or it may be constructed from data obtained from an outline sketch.

Let r_1, r_2, r_3, etc. (Fig. 231) be the path of the ball of a Porter governor. Let W = weight of one ball and L = central load. First suppose the governor unloaded; that is, L = 0, and draw a curve ab (Fig. 232), by plotting the respective values of F and r.

The value of F in pounds $= 2W\frac{r}{h}$, which includes the

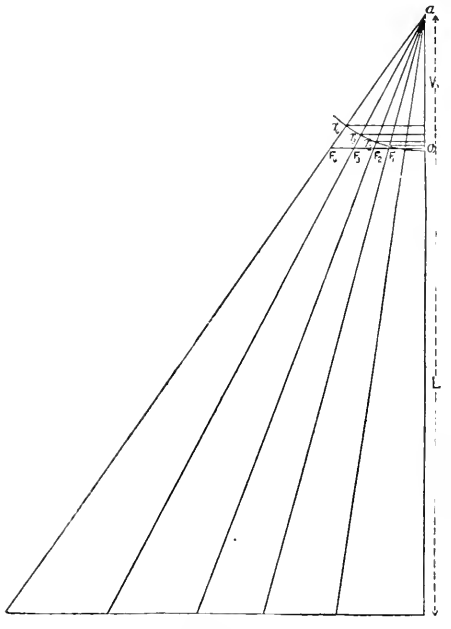

Fig. 231.

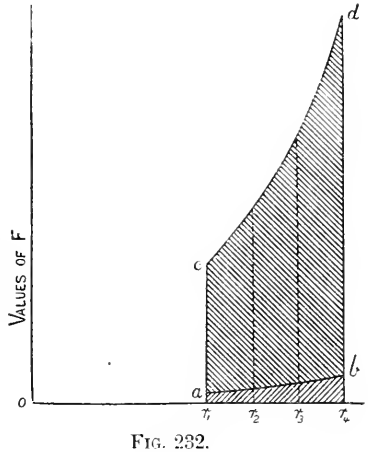

Fig. 232.

effect of the two balls; and r is drawn to a convenient scale of decimal parts of a foot.

Next draw a curve cd, which is obtained by including the effect of the central load. Here $F = 2(W + L)\frac{r}{h}$.

It is usual to estimate the centrifugal force F of one ball only when

considering questions of speed and rotation, lift of sleeve, and so on; but double the value of F must be taken for the effect of the two balls when considering the *power* of the governor.

The area r_1abr_4 shows the work done by an unloaded governor in moving through its full range.

The area r_1cdr_4 represents the work done by a loaded governor in moving through the same range.

The increase of power by increase of central load is thus very clearly seen.

Friction of a Governor.—Hitherto the effect of friction on the governor has been neglected, and its movements have been considered to be perfectly free from any disturbing effects. But in practice, if F = the centrifugal force which would cause the governor to rise if there were no friction, a further force f is necessary before any rise of the governor actually occurs in order to overcome the friction of the moving parts, and therefore a certain range of speed takes place due to the respective centrifugal forces F and F + f, but without any corresponding rise of the governor.

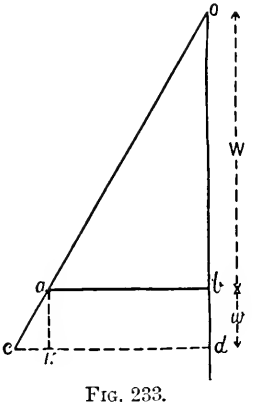

FIG. 233.

Similarly, in the downward direction, the speed of the governor may change accompanied by a corresponding change of force from F to F − f, but without any change of position of the governor owing to the resistance due to friction.

The amount of the friction, or, in other words, of the upward pull, due to a change of speed of the governor, but without a corresponding rise of the sleeve, may be determined either graphically or numerically as follows.

In Fig. 233, if the angle aob is the configuration of the governor arm, ab = F, cd = F + f, cK = f. The problem is to find w, which is the resistance due to friction when the speed rises from N, namely, that due to F, to N_1, namely, that due to F + f.

$$\text{Then } ab : cd :: F : F + f$$
$$\text{and } F : F + f :: N^2 : N_1^2$$
$$N^2 : N_1^2 :: W : W + w$$
$$\frac{N_1^2 - N^2}{N^2} = \frac{(W + w) - W}{W} = \frac{w}{W}$$
$$\therefore w = W\left(\frac{N_1^2 - N^2}{N^2}\right) \text{ for one ball}$$
$$= 2W\left(\frac{N_1^2 - N^2}{N^2}\right) \text{ for two balls}$$

EXAMPLE.—Find the pull on the governor sleeve when the governor ball weighs 5 lbs, and the speed changes from 100 to 120 revolutions without any lift of the sleeve.

$$w = 2 \times 5 \left(\frac{120^2 - 100^2}{100^2} \right) = 4{\cdot}4 \text{ lbs.}$$

The effect of friction in increasing the total range of speed of the governor may be well shown by the diagram first proposed by Mr. Hartnell.

In the Fig. (234) for any governor, neglecting friction, the curve *ab* is drawn so that any vertical ordinate = F at radius *r*.

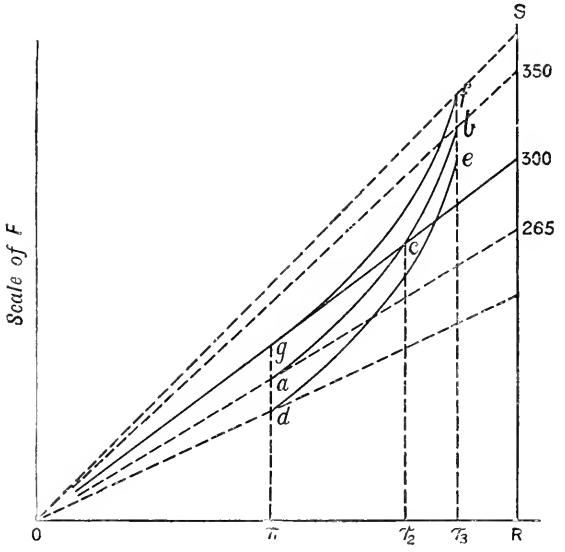

FIG 234.

Take any point *c* on this curve; then the centrifugal force $r_2c = F$, and the radius or_2 being known, the speed at *c* can be found from—

$$F = 4\pi^2 n^2 r \frac{W}{g}$$

But when F varies as *r*, *n* is constant; and *oc* is a line of constant speed of rotation. Also the lines drawn from *o* to *a* and from *o* to *b* are lines of constant speed of rotation, and they represent the range of speed of the governor in moving through its extreme positions or_1 to or_3, when friction is neglected. If now friction lines be added, *gf* being drawn = F + *f* for each position r_1r_2, etc., when the balls are moved outwards, and *de* is drawn = F − *f* when the balls are moved inwards, the total range of speed of the governor is now given by the lines *ol* and *of*, which, it will be seen, is much greater than before.

If *o*R be taken = 1 ft. to scale, then a scale of speeds may be drawn on the vertical line RS by calculating the value of F for certain speeds as 100, 120, 140, etc., and setting up the values of F found on the line RS, and joining to the point O. These points are then

marked with the number corresponding to the revolutions used in calculating F.

Isochronism.—When a governor is so designed that the height h of the cone of revolution of the balls is constant for all positions of the balls (see Fig. 229), then the speed n is constant throughout the full range of movement of the governor, neglecting friction. The governor is then said to be *isochronous*, that is, it runs at an equal speed in all positions.

In such a case F varies directly as r, for—

$$F = 4\pi^2 n^2 r \frac{W}{g}$$

and all the factors but F and r are constant.

Referring to Figs. 230 or 234, it will be seen that the curve of such a governor is a straight line radiating from the origin o, and it will be evident that such a governor will be in neutral equilibrium; also that it does not obey the condition of stability, namely, that F must increase more quickly than r as the governor rises.

Such a governor would be too sensitive, for the engine driving the governor would first increase in speed until it reached the speed due to the governor, after which the slightest increase would cause the balls to fly to the extreme position and the governor to cut off steam. The engine would then slow down, when the balls would suddenly fall to the other extreme position, and the steam-supply be opened wide. This effect of continual fluctuation above and below the mean speed is called "hunting." In practice it is somewhat reduced by the friction always present in a governor gear, and it may be further reduced by the addition of a dash-pot or by means of a spring, which is arranged to cause F to increase somewhat more quickly than r.

If the governor balls move in a parabolic path, then they fulfil the condition of isochronism, namely, that h is constant.

Thus, it is a property of the parabola (Fig. 235) that

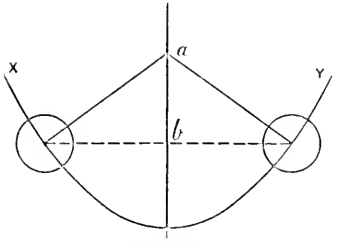

Fig. 235.

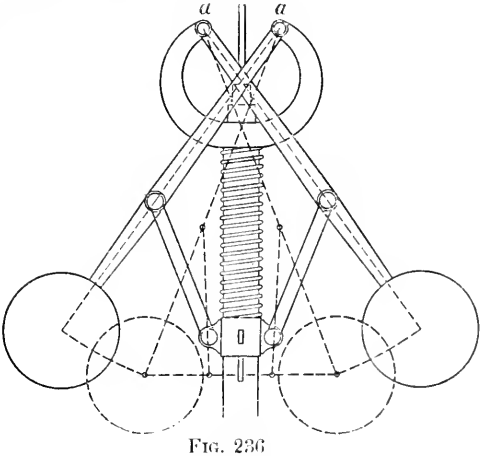

Fig. 236

the subnormal $ab = h$ is constant for all positions of the weight W on

the parabolic curve XY, so that if W move in a parabolic path, the height h will be constant.

An approximate equivalent to this is obtained by the use of the crossed-arm governor; and by suitably choosing the points of suspension a, a of the arms, as in Head's governor, Fig. 236.

If the points are chosen so that h is approximately constant, then the governor is in neutral equilibrium. If, however, the points a, a are taken nearer the axis than in the previous case, then the equilibrium is stable; but if further away from the axis than in the first case, instead of nearer to it, then the equilibrium becomes unstable—that is, the height h of the cone of revolution becomes greater, and not less, as the speed increases.

Spring governors can be made isochronous, if desired, by so adjusting the spring that the initial compression in the spring bears the same ratio to the total compression that the minimum radius of the balls bears to the maximum radius. The spring is usually made a little stronger than this to give stability to the governor. This point is referred to later.

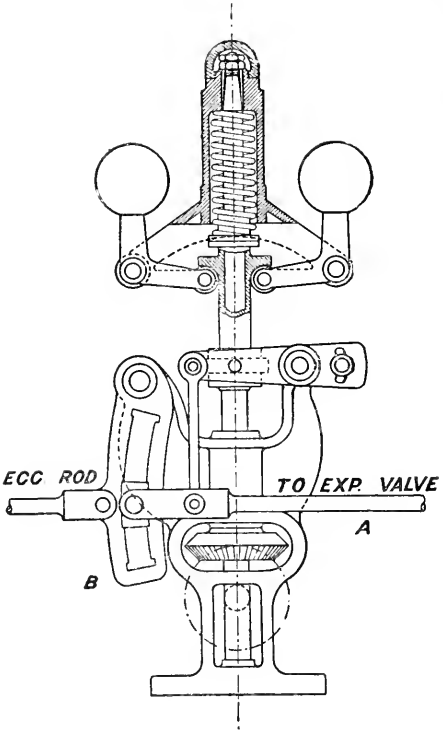

FIG. 237.

Fig. 237 is a drawing of a Hartnell automatic variable expansion governor for regulating the travel of an expansion valve working on the back of a main slide valve, the travel being regulated by the movement of the lever A in the slotted link B. As the speed increases the governor raises the position of the lever A, and the travel of the valve is thereby reduced. This governor is capable of very close regulation, and when the speed exceeds a given number of revolutions, the steam supply may be entirely cut off.

The Proell Governor.—Fig. 238 consists of two inverted ball-arms which are suspended by the curved bell crank levers LL from the pins CC. The centrifugal force of the balls is counteracted by a powerful spring S, which takes the place of a weight.

On the engine reaching a certain speed, which is determined by

the initial compression in the spring, the balls move outwards, and the sleeve rises from its bottom position, as shown in the figure, towards the highest position, shown dotted.

The points AA, at which the ball-arms are pivoted, are chosen outside the centre lines of the arms, and in such a position that the centres of the balls as they open move very nearly in a horizontal plane. This governor may thus be made as nearly isochronous as desired by making the centrifugal force of the balls increase or decrease in the same ratio as the compression of the spring.

The figure also shows the mode of application of an auxiliary spring E to vary the speed of the engine while running. The spring rests in a sleeve, F, which is pivoted in a bracket at K. The point P at the upper end of the auxiliary spring is made to move as required along the groove shown in the lever QR by means of the screw W: the effect of the movement of P in the groove in the direction towards the centre of the governor is to further compress the spring E, as well as to increase the leverage of the spring about the centre R, and thus to assist the outward movement of the balls and reduce the speed at which the governor begins to act.

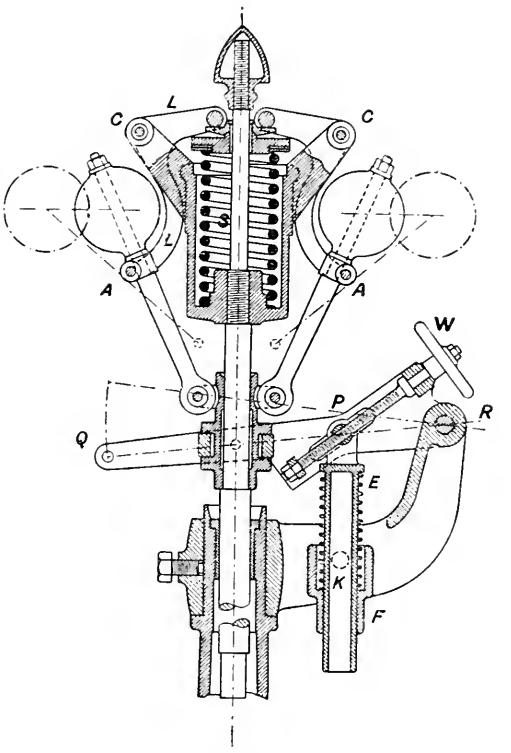

FIG. 238.

Fig. 239 is a sectional drawing of the well-known "Pickering" governor, fitted also with a stop-valve A in the same casting as the valve of the governor. In the Pickering governor, the ordinary arms are replaced by flexible sheet-steel strips, to which the balls are attached, and which bend outwards by the outward tendency of the balls as the speed increases. This bending of the strips causes the upper cap on the top of the spindle to press the spindle downwards, and to tend to close the steam-passages by the equilibrium

valve V at the bottom of the spindle. The speed at which the governor may be made to act is regulated by a spring S, which is

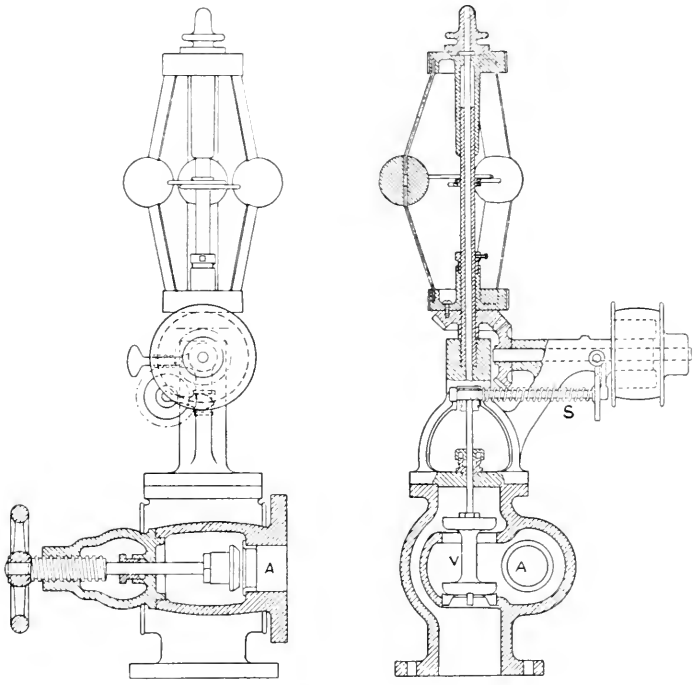

FIG. 239.

equivalent to regulating the load on the spindle, the spring actuating a forked lever resisting the downward movement of the valve spindle.

The Shaft Governor.—To secure regulation of the speed by automatic cut-off in quick revolution engines, and to obtain a governor sufficiently powerful for the purpose, it is usual to use what is known as the *shaft governor*. The construction of this type of governor will be understood from the diagrams which follow. The mechanism of the governor is usually arranged to work in a pulley keyed to the engine crank-shaft, and it thus rotates at the same speed as the shaft. The movement of the parts of the governor depends, as usual, upon the change of centrifugal force of rotating weights on change of speed of the engine.

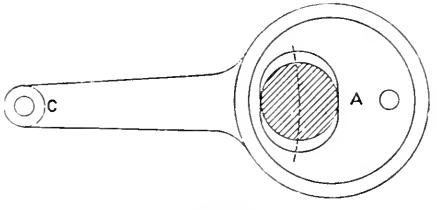

FIG. 240.

There are many different designs for transferring the movement of the balls to the valve gear for the purpose of regulating the cut-off; but a simple form consists of an arrangement as shown in Fig. 240, where A is the eccentric from which the slide-valve of the engine is worked. The governing of the engine is done by varying the position of the eccentric centre relatively to the centre of the shaft, and thus varying the travel of the slide-valve.

The eccentric is slotted as shown, so as to permit of a radial movement of the eccentric arm about some convenient centre C, the

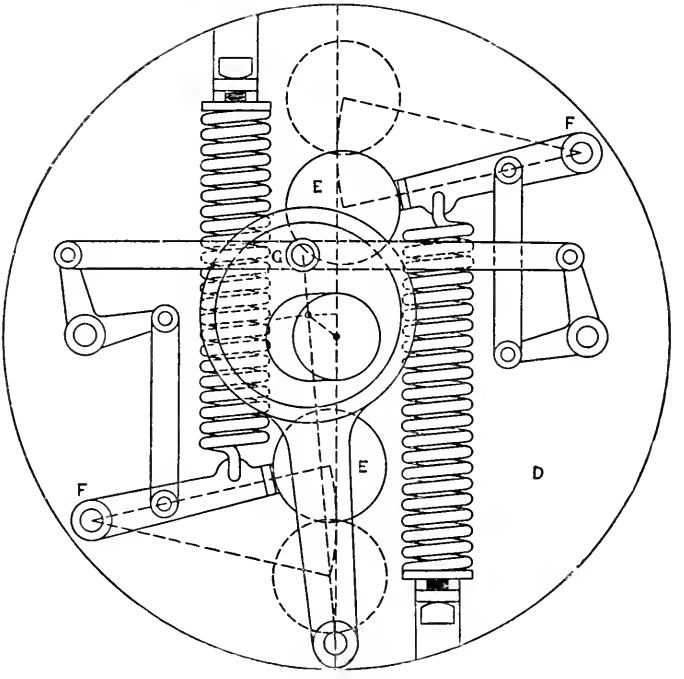

Fig. 241.

effect of which is to give the required change of position of the centre of the eccentric disc relatively to that of the crank-shaft.

In Fig. 241, which is an outline sketch of a shaft governor, the rotating wheel D is keyed to the engine shaft, and the weights E, E are pivoted to the wheel at F, F. The weight levers are connected to the eccentric arm at G, and when the speed increases, the weights move outwards about the centres F, F by centrifugal force, and cause the eccentric disc to move across the shaft by means of the levers as shown. The springs resist the outward movement of the balls, and by means of the springs the speed at which the governor acts is regulated.

The effect of the movement of the eccentric disc across the shaft is

similar to that which happens in an ordinary Stephenson link motion, when the link is moved from the end to the middle position, and which has already been described in connection with the link motion. But the subject may here be considered a little further.

In an automatic cut-off gear arranged to vary the travel of the valve by an adjustable eccentric, when the path of the eccentric centre is a straight line at right angles to the crank, as in Fig. 242, the lead *ed* is constant for all positions *a*, *b*, *c*, or *d* of the eccentric, where circle of radius *oa* is the maximum travel circle, and *oe* is the radius of the lap circle.

When the path of the eccentric centre is on an arc *ad*, concave towards the crank-shaft centre, as in Fig. 243, then the lead increases

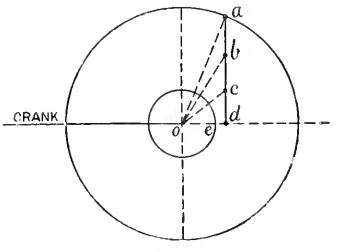

Fig. 242.

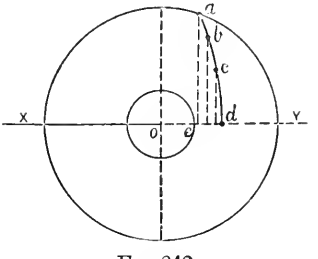

Fig. 243.

as the eccentric moves nearer to *d* in the arc *ad*; that is, the lead is greatest at the minimum loads.

When the arc *ad* is convex towards the crank-shaft centre, as in Fig. 244, then the lead *ef* is a maximum at full load, and decreases to *ed*, a minimum, at the light loads. In this case the lead may be reduced to zero, or a minus quantity at mid-position. The arc of movement of the eccentric centre depends upon the point of suspension of the eccentric arm of the governor.

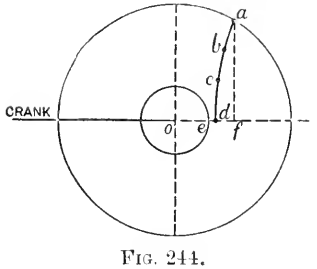

Fig. 244.

Generally speaking, the condition of constant lead, as in Fig. 242, would be preferred, but each type has its own special advantages.

Fig. 243 represents the conditions which obtain in most ordinary link-motion engines, where the lead is greatest at light loads, the increasing lead securing a sufficient port opening to maintain the initial steam-pressure as high as possible to obtain the full benefit of expansion, the power being kept down by a large compression.

Fig. 244 is exceptional, but is preferred by some engineers. In this case a reduced port opening at light loads reduces the initial steam pressure by partial throttling, and a large expansion is sacrificed to reduced range of stress on the piston.

If the point of suspension of the eccentric arm, instead of being on the centre line XY, is chosen in some position, A, as shown in Fig. 245, we then have a compromise between the conditions already described, and the same lead may be obtained at both maximum and minimum loads, with a somewhat larger lead in mid-position.

The various points of port opening, cut-off, release, and compression for any position of the eccentric centre on the arc *ad* may be found, as already shown in Figs. 85, 88, and 90.

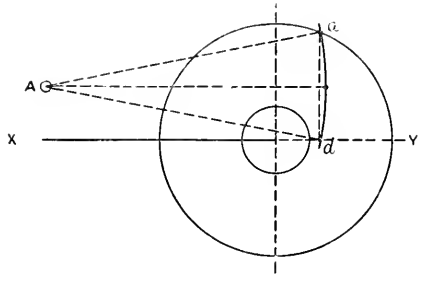

Fig. 245.

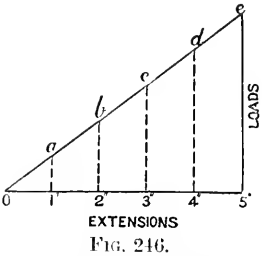

Fig. 246.

Springs.—The law of the helical spring is that equal increments of load give equal increments of extension or compression, within certain limits.

This may be represented by a diagram (Fig. 246) where the base-line is the line of extension and the vertical lines the loads producing the extensions. Then it will be found by experiment that the line joining the upper extremities of the load-lines is a straight line, the extensions being in units of length, and the loads in pounds.

The load required to extend the spring per unit of length—say 1 inch—is a measure of the *strength* of the spring. Thus 1*a* is the strength of the spring, being the load required to extend the spring 1 in.

The load required to extend the spring 2 in. is twice that required to extend it 1 in., and so on. Similarly, we have seen that at constant speed of rotation centrifugal force varies directly as the radius, and a similar figure to Fig. 246 may be used to represent the uniformly increasing centrifugal force as the radius of rotation increases, the revolutions remaining constant (Fig. 247). If, therefore, the revolving weights of a governor are held by springs so designed that the tension of the spring is equal to the centrifugal force at all positions of the

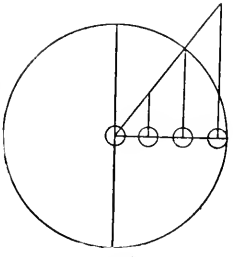

Fig. 247.

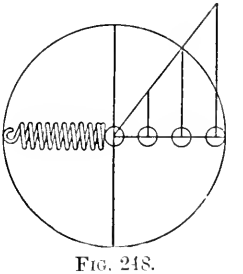

Fig. 248.

balls, then Figs. 246 and 247 may be combined (Fig. 248), and in such a case the governor is isochronous.

Example.—A ball weighing 20 lbs. revolves at 250 revolutions per minute. Find the strength of spring required to make the governor isochronous, supposing the spring to be attached directly to the ball.

Since, by supposition, the tension in the spring varies with the centrifugal force, then, when the ball is at zero radius, the tension in the spring is also zero; and if S = the strength of the spring, that is, the pull required to stretch it unit length, then—

$$Sr = 0{\cdot}00034 \div 12 \times W \times r \times N^2$$

where r = radius of ball or stretch of spring in inches;

$$\begin{aligned} S &= 0{\cdot}0000284 \times W \times N^2 \\ &= 0{\cdot}0000284 \times 20 \times 250^2 \\ &= 35{\cdot}5 \text{ lbs.} \end{aligned}$$

that is, the strength of the spring = 35·5 lbs. per inch of extension.

Let the mean radius of the rotating weight be 12 in. with a range 2·5 in. on each side of the mean radius. Then (Fig. 249) ob is the mean radius; and the pull in the spring at this radius = 35·5 × 12 = 426. Set up be = 426 lbs. Then for all other positions of the rotating weight, since the value of N is assumed constant, the centrifugal force and the pull in the spring at any radius will be given, by joining the line oe through the origin o, and measuring the vertical height as at ad, cf to the same scale as be. The line ad = 9·5 × 35·5 = 337·25, and the line cf = 14·5 × 35·5 = 514·75.

So far we have considered the strength of the spring for an isochronous governor, or one running at constant speed for all positions of the balls; but, as before explained, such governors are not desirable, being inactive below the speed required, and flying outwards through their whole range of movement when this speed is slightly exceeded. The friction, however, which is always present more or less in all governors prevents absolute isochronism in any governor.

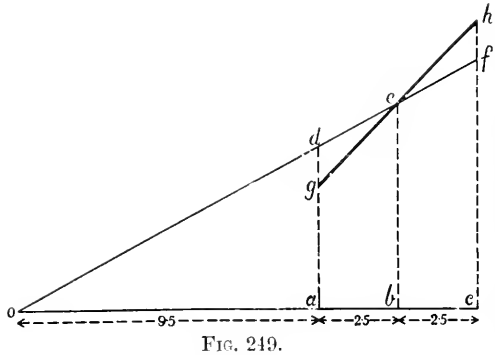

Fig. 249.

In practice, a spring is chosen whose strength increases at a rate somewhat greater than the rate of increase of the radius. Thus, suppose in the same governor the strength of the spring to be 45 lbs., to find the effect of the change of spring upon the speed for the same range of radius. The speed at the mean position ob (Fig. 249), namely, 12 inches radius, being the same as before, the centrifugal

force in this position and the tension of the spring are in equilibrium, and are equal to $35{\cdot}5 \times 12 = 426$ lbs. $= be$. At the minimum radius oa, the tension in the spring is now $426 - (45 \times 2{\cdot}5) = 313{\cdot}5$ lbs. $= ag$, and at the maximum radius $oc = 426 + (45 \times 2{\cdot}5) = 538{\cdot}5$ lbs $= ch$; this represents a range of speed as follows: (1) For the minimum radius $oa = 9{\cdot}5$ in.—

$$N^2 = \frac{F}{0{\cdot}00034 \times W \times \frac{r}{12}}$$

$$= \frac{313{\cdot}5}{0{\cdot}0000284 \times 20 \times 9{\cdot}5}$$

$$N = 241 \text{ revolutions per minute}$$

(2) For the maximum radius $oc = 14{\cdot}5$ in.—

$$N^2 = \frac{538{\cdot}5}{0{\cdot}0000284 \times 20 \times 14{\cdot}5}$$

$$N = 260$$

The variation in speed neglecting the effect of friction

$$= \frac{\text{range of speed}}{\text{mean speed}} \times 100 = \frac{260 - 241}{250} \times 100 = 7{\cdot}6 \text{ per cent.}$$

Also *geh* is the line of force with the stronger spring, and it makes with *oc* an angle *oeg*, which is a measure of the stability of the governor.

If the spring is attached to the weight arm at some point *c* (Fig. 250), between the centre *a* and the centre of gravity of the weight *b*, then the strength of the spring must be greater than if attached directly to the ball in the ratio $\frac{ab}{ac}$.

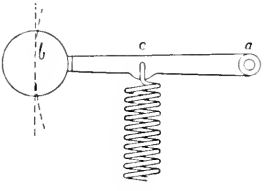

FIG. 250.

We have so far considered only the centrifugal force acting in the governor, but during a change of speed of the engine there are other forces beside centrifugal force acting on the governor, and which will be found to either oppose or assist the action of the centrifugal force. These forces will now be briefly considered.

1. *Tangential Acceleration.*—Let Fig. 251 represent a governor disc secured to the engine shaft and rotating about the centre A, and let the ball B be connected by the arm BC to the pivot C on the disc. Then an increase in the speed of rotation of the disc will cause the ball B to move outwards from the centre A by centrifugal force. But if the centre C of the ball arm be pivoted at the centre of the shaft, as in Fig. 252, then, when the disc is rotated, the centrifugal force acts radially along the arm connecting the ball to the centre of the shaft, but the centrifugal moment is zero, since the pivot of the arm coincides with the centre of the shaft, and the force has no effect for the purpose of regulation of speed.

If, however, the speed of rotation of the disc increases, then the tendency is for the ball (Fig. 252) to maintain its original speed and to lag behind relatively to the disc, which is equivalent to a movement in the direction of the arrow D, or in the direction opposite to D if the speed of rotation of the disc decreases. This movement of the ball relatively to the disc and in a direction tangential to the path of the centre of gravity of the ball, is the result of the inertia of the ball producing *tangential acceleration.*

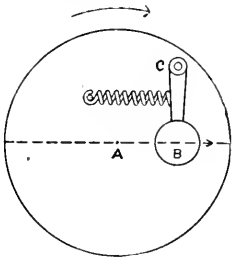

FIG. 251.

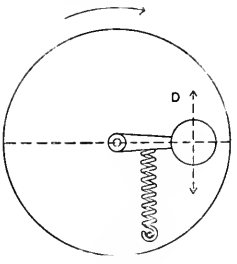

FIG. 252.

In the case of Fig. 251, the moment about C of the force producing tangential acceleration is zero whatever the change of speed, because the line of action of the force passes through the pivot.

In Fig. 252 this moment is a maximum. In intermediate positions the moment of the force producing tangential acceleration is equal to the force multiplied by the perpendicular distance CD, between the pivot C, and the tangent to the circle drawn from the centre of rotation, and passing through the centre of gravity of the weight.

This force may be made to *assist* or to *oppose* the centrifugal force

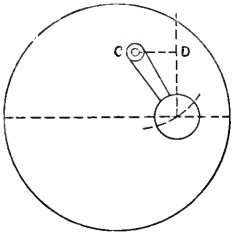

FIG. 253.

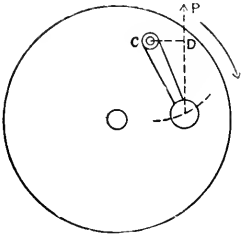

FIG. 254.

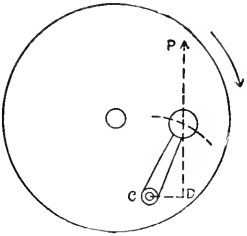

FIG. 255.

according to the position of the pivot of the ball arm in relation to the centre of gravity of the weight. Thus, if in Figs. 254, 255 the disc is rotating clockwise as shown, then in Fig. 254 the moment of the tangential force acting during increase of velocity of the disc $= P \times CD$, and it acts so as to supplement the centrifugal force, and thus to make the governor more prompt and rapid in its movement; in Fig. 255, with the position as shown, the tangential force acts to oppose the centrifugal force, and thus to make the governor more sluggish.

2. *Angular Acceleration.*—Another form of accelerating force which is capable of useful application in the shaft governor will be understood

from the illustration (Fig. 256). At the end of the arm AB, which is supposed to be rigidly attached to the shaft at centre A, let the weight at the end B be distributed in the form of a bar, CD, instead of being concentrated in the form of a ball at the centre of gravity B; and let the bar CD be free to move about the centre B. Then, if the shaft to which AB is rigidly attached is rotated about the centre A at a high velocity and then suddenly stopped, the kinetic energy in the balls C and D will cause the arm CD to spin round the centre B.

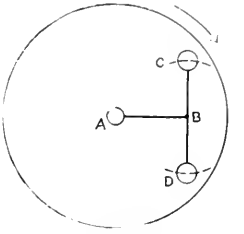

FIG. 256.

Similarly, if during the rotation of the shaft the rate of rotation should suddenly increase, even slightly, then

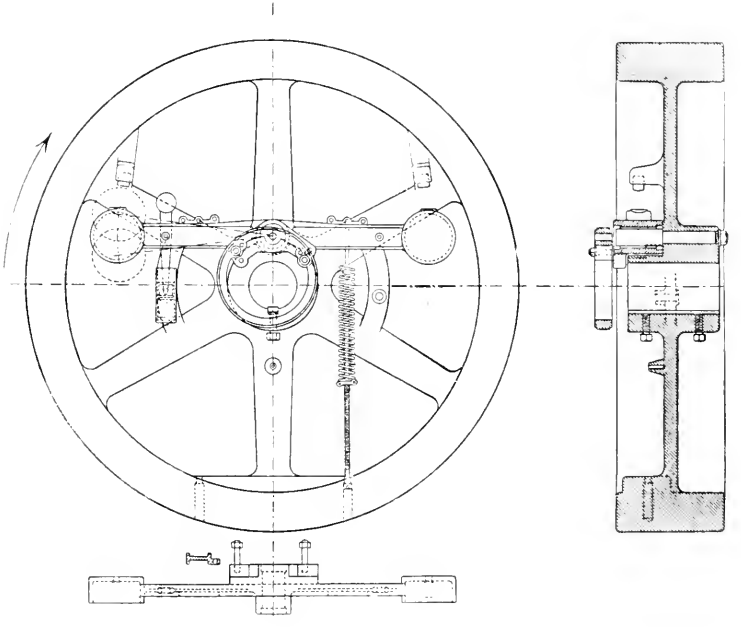

FIG. 257.

during the change of speed the arm tends to lag behind momentarily until the speed has again become uniform; or, *vice versâ*, if the speed of the shaft decreases, the arm tends to maintain the same rate of rotation, and thus to move about its centre B with a greater angular velocity than the shaft A. This property of the bar when centred at B has been termed *angular inertia*, and it has

recently been successfully applied as a supplement to centrifugal force for the purpose of increasing the sensitiveness of the shaft governor.

Fig. 257 illustrates a very successful governor made on this principle, and known as "Begtrup's shaft governor," made by Messrs. Browett and Lindley, of Patricroft.

CHAPTER XV.

TURNING EFFORT IN THE CRANK-SHAFT.

As has been already pointed out, it is important, for steadiness of running, that the turning effort in the crank-shaft should be as uniform as possible. But in practice, the conditions are such that the turning effort varies more or less considerably during each half-revolution of the crank. The nature and extent of the variation, and the means adopted for reducing it to a minimum, will now be described.

The causes producing variable turning effort are—

1. The variable pressure of the steam acting on the piston.

2. The mechanical combination of crank and connecting-rod which, even with a uniform steam-pressure on the piston, results in a variable turning effort on the crank-pin, the variation ranging from zero to a maximum twice every revolution of the crank.

3. The inertia of the reciprocating parts of the engine, including the piston, piston-rod, cross-head, and connecting-rod, which absorb power in acquiring velocity during the early portion of the stroke, and restore it while being retarded during the later portion of the stroke.

The means employed to reduce the variable turning effort in the crank-shaft, or to modify its effects, are—

1. The combination of engines working on separate cranks in the same shaft, the cranks being so disposed that the mutual variations in the separate cranks correct each other when in combination. The number of cranks employed in practice may be one, two, three, four, five, or more, and the more numerous the cranks the more uniform the twisting moment at all points in the revolution of the shaft.

2. The adjustment of the points of cut-off and compression to the speed of the engine.

3. The use of the flywheel.

It will be necessary, before proceeding further with the subject, to consider the relation between the respective velocities of the piston and crank-pin.

Piston and Crank-pin Velocities.—Neglecting the obliquity of the connecting-rod. Take any point P (Fig. 258) to represent the position of the crank-pin when crank of radius OP moves about the

centre O. Assume that the crank-pin P moves in its circular path at a uniform velocity V in feet per second. Set off PV at right angles to OP, or tangential to the circle at point P, making PV equal in length to the velocity V of the pin to any scale of feet per second.

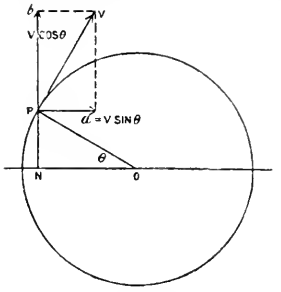

Fig. 258.

This velocity V, in a direction tangential to the circle, may be resolved into component velocities, Pa horizontally, and Pb vertically.

Draw the perpendicular PN to meet the horizontal diameter. Then angle bPV = angle $PON = \theta$; and $Pa = V \sin \theta$; and $Pb = V \cos \theta$.

But when OP is drawn to scale to represent in units the velocity of the crank-pin (which is assumed uniform), then the perpendicular $PN = V \sin \theta$, and ON intercepted between the perpendicular and the centre $O = V \cos \theta$; and thus for any position P of the crank-pin, $PN = Pa = V \sin \theta$ = the horizontal component of the crank-pin velocity = the velocity of the piston.

Relative Velocities, including Obliquity of Connecting-rod.—In Fig. 259, let O be the centre of the crank-pin circle, with radius of crank OP, and PN the length of the connecting-rod. The point N is the position of the cross-head pin, and relatively also of the piston. To find the relative velocities of crank-pin and piston with a short connecting-rod, PN, find the virtual centre or instantaneous axis about which the connecting-rod PN is moving for the given position OP of the crank, by drawing lines PA and NA normal to the direction of motion of P and N at the moment considered. Then the point A is the virtual centre required, and the relative velocities of P and N are proportional to the virtual radii AP and AN respectively.

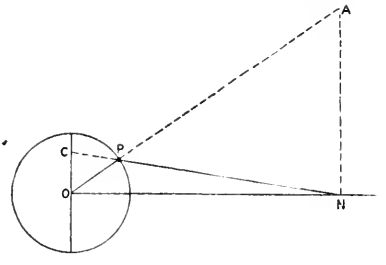

Fig. 259.

The same result may be obtained by producing the connecting-rod NP to meet the perpendicular through the centre O in C. Then the triangles APN and OPC are similar, and AP : AN :: OP : OC. In other words, if OP = velocity of crank-pin, then the intercept OC = corresponding velocity of piston for position OP of the crank.

Polar Diagram of Piston Velocity.—The velocity of the piston at each point of its path throughout the stroke may be represented by a curve as follows: First draw a circle with radius Oa = assumed constant velocity of the crank-pin, and, as shown in Fig. 260, draw the connecting-rod for various crank-positions, a, b, c, cutting the vertical

centre line at points 1, 2, 3, etc. With radius O1, O2, O3, etc., transfer these distances on to their respective crank positions *a*, *b*, *c*, etc., and join the points so obtained by a curve.

If the obliquity of the connecting-rod had been neglected, this curve

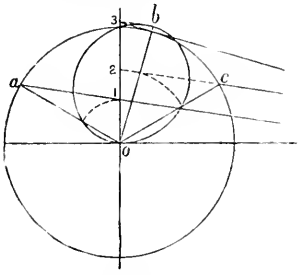

FIG. 260.

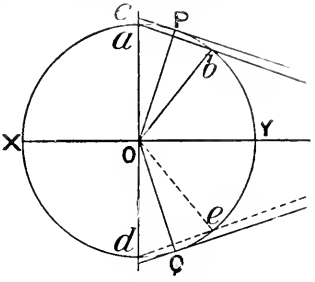

FIG. 261.

would be a circle, but it will now be seen to be an irregular figure extending beyond the crank-circle for a short portion of the crank-path.

With a short connecting-rod, the point of maximum velocity of the piston is as nearly as possible that at which the crank and connecting-rod are at right angles; in other words, where the centre line of the connecting-rod is tangential to the crank-pin path, as at OP, OQ (Fig. 261).

The velocity of the piston is the same as that of the crank-pin when the crank is perpendicular to the centre line of the engine, and again at crank position O*b*, where the connecting-rod produced from *b* passes through *a*. The conditions are similar at *d* and *e* below XY.

Between crank positions *a* and *b* and *d* and *e* the piston velocity is greater than that of the crank-pin; in all other positions the piston velocity is less than that of the crank-pin.

At positions of maximum velocity of the piston, namely, at OP and OQ of the crank, the velocity of the piston is to that of the crank-pin as O*c* : O*a*.

Tangential Pressure on the Crank-pin.—Having considered the relative *velocities* of piston and crank-pin, we will now examine the relation between the *forces* acting through these moving parts.

First, considering the case where the pressure of the steam is assumed uniform throughout the stroke, and neglecting the obliquity of the connecting-rod and the inertia of the moving parts.

In Fig. 262, let AB produced be the centre line of a horizontal engine, O the centre of the crank-shaft, and OA the radius of the crank. Let OA also represent to scale the total pressure P acting on the piston (supposing the pressure on the piston constant).

When the crank is in position AO, the pressure of the steam upon the piston has no tendency to turn the crank about its centre O, the piston-rod, connecting-rod, and crank being all in one straight line, and the whole pressure acts to press the crank-shaft against its bearings. When the crank is in position OB, the pull being in the

line AB, there is again no tendency to turn the crank about O. These two positions of the crank are called the *dead centres.*

For positions OC and OD of the crank, the whole pressure P on the piston (neglecting the obliquity of the connecting-rod) acts at the moment in the direction of motion of the crank-pin, and hence the whole force is exerted in turning the crank. At this point C, and at the opposite point D, the turning moment is a maximum = P × CO.

From this we see that, even though the pressure on the piston is uniform throughout the whole stroke, the turning effort on the crank-pin is very variable, changing from zero at the dead centres, to a

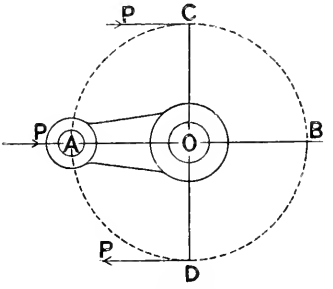

FIG. 262.

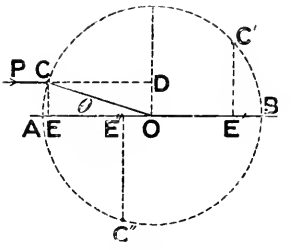

FIG. 263.

maximum at two points of the revolution. Under the conditions here assumed, the points of maximum turning effort are when the crank is at right angles to the axis of the cylinder; but when the steam is cut off at some earlier point than half-stroke, the maximum turning effort is somewhere nearer the beginning of each half-revolution.

At intermediate positions the pressure on the crank-pin is employed partly in turning the shaft, and partly in causing an increased pressure through the crank upon the main bearings.

To find the *twisting moment* on the shaft due to the pressure on the piston acting on the crank at point C (Fig. 263). The pressure P, acting parallel to AB through C, causes a twisting or turning moment about O = P × DO = P × CE. But P is assumed constant; therefore for any point, C, C′, C″, of the crank the twisting moment is proportional to the perpendicular CE, C′E′, etc., drawn from C upon AB; and the amount of the twisting moment in inch-pounds = CE, C′E′, etc., in inches multiplied by P, the total pressure on the piston in pounds.

The tangential or *turning effort* acting on the crank-pin, as distinguished from the *twisting moment* acting through the shaft, may be found thus:

If T is the turning effort acting tangentially on the pin, then T × radius CO = twisting moment due to turning effort T about O. But P × CE is also the twisting moment;

$$\text{therefore } T \times CO = P \times CE$$

$$T = P \times \frac{CE}{CO}$$

$$= P \sin \theta$$

If the radius CO be drawn equal to the pressure P to scale, then —

$$\text{from } T = P \times \frac{CE}{CO}$$
$$\text{we have } T = CE$$

and this is true for any position of the crank.

Since the twisting moment at any part of the revolution is equal to the tangential effort multiplied by a constant number, namely, the length of the crank, the diagram of tangential effort and the diagram of twisting moments are the same, though measured by a different scale, the one being in pounds, and the other in pounds multiplied by the radius of the crank in inches.

Diagrams of Turning Effort on the Crank.—The facts above stated as to the variable nature of the tangential or turning effort on the crank-pin during a revolution of the crank may be well illustrated by a diagram as follows :—

Let the circle ACBD represent the crank-pin path, and OC the radius of the crank ; and let OC represent to scale the pressure on the piston (supposed uniform). Take a number of equal subdivisions, C, C′, etc. Then the perpendicular CE on AB for any position OC of the crank represents the turning effort on the crank-pin at this point. From C, C′, etc., set off on the radius OC produced distances CF, C′F′ equal to CE, C′E′. If the extremities of these lines be joined, a curve is obtained above and below the centre line which represents the turning effort at every part of the revolution ; and it will be seen therefrom in what way the turning effort varies during one revolution from zero at A and B to a maximum at G and H. As before explained, if the scale of measurement be multiplied by the crank radius in inches, the same diagram will serve as a twisting-moment diagram.

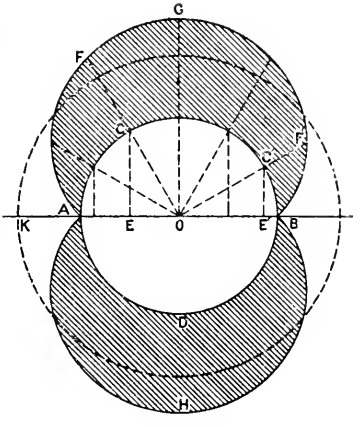

FIG. 264.

The dotted circle drawn from the centre O, with radius OK, is the curve of *mean tangential pressure*, and it is drawn by making AK : P : : 2 : π, where P = the mean effective pressure on the piston (neglecting friction).

The circumference of the circle ACBD (Fig. 264) may be unwound and the diagram set up on a straight base, as shown in Fig. 265. The straight base MN is drawn equal to the circumference of the circle ACBD (Fig. 264). It is then divided into the same number of equal parts as the circumference, and distances CF, C′F′, etc., set up from

the respective divisions. The curves joining the ends of these lines are the curves of tangential pressure as before.

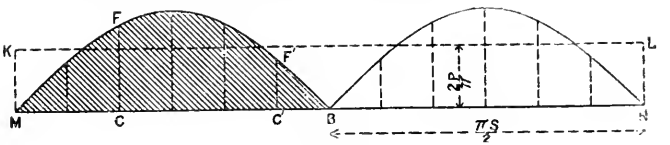

FIG. 265.

The *mean* tangential-pressure line KL is drawn by setting up MK, so that MK : P :: 2 : π.

It will be noticed that the area MFF'B, enclosed between the base and the curve and shown shade-lined, is the diagram of work done upon the crank-pin during a half-revolution of the crank-shaft, the ordinates representing the turning effort in pounds, and the base representing the distance through which the effort has been exerted; and this area is exactly equal (neglecting friction) to the work done upon the piston during a single stroke, as given by the indicator diagram. If S = stroke of piston, and P = mean pressure on piston, then $S \times \frac{\pi}{2}$ = path of crank-pin during one stroke of piston, and MK, mean tangential pressure on crank-pin, $= P \times \frac{2}{\pi}$

$$P \times S = \left(P \times \frac{2}{\pi}\right) \times \left(S \times \frac{\pi}{2}\right)$$

The line KL (Fig. 265) has been called the line of mean tangential pressure, but it is also the *line of resistance* due to the load (assuming

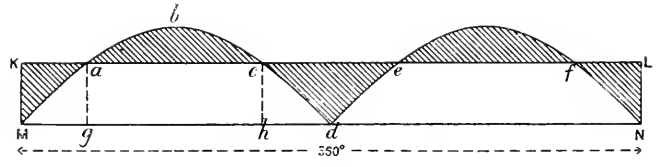

FIG. 266.

the load constant); for unless the mean effort and the mean resistance are equal, there must be a change of speed of revolution of the engine, the speed increasing or decreasing as the effort is greater or less than the resistance.

We have seen that, though the resistance is uniform, the effort is extremely variable. Thus (Fig. 266), during a half-revolution of the crank, and commencing at the point *a*, the force exerted rises above the mean-resistance line KL, and continues above this line till the point *c* is reached, and unless a flywheel is attached to the engine to absorb the additional power, the result will be that

during the short portion *ac* of the revolution, the driving force being greater than the resistance, the speed of rotation will increase and become a maximum at *c*. Beyond the point *c* the driving force falls below the resistance, and without a flywheel to restore power to the engine, the speed will decrease until the point *e* is reached, at which point the speed is a minimum.

It will thus be seen, though the speed per minute may be uniform, that there is much tendency to irregularity of speed of rotation during a single revolution. This tendency, however, is very largely corrected by the addition of a flywheel, as is explained subsequently. If the straight base MN (Fig. 266), representing the circumference of the crank-pin path, be divided into a scale of degrees, then M*g* degrees to scale represent the position of the crank-pin past its dead centre M when the velocity of the crank is a minimum, and M*h* degrees the position of the crank-pin when the velocity of the crank is a maximum.

When the speed of the engine is constant, the area *abc* is equal to the area *cde*. When the area *abc* is greater than the area *cde*, then the speed is increasing, and *vice versâ*.

Effect on the Twisting Moment of Combinations of Cranks.—For several reasons, it is important that the twisting moment on the crank-shaft should be as uniform as possible, and therefore that the areas *abc* and *cde* (Fig. 266) should be reduced as much as possible. The way in which these areas are affected by various combinations of multiple-cylinder engines working on various arrangements of cranks is shown by the following figures. The steam in the respective cylinders is considered of uniform pressure throughout the stroke for the sake of simplicity.

Case I. *A single engine working on a single crank.* This case has already been considered.

Case II. *Two engines working on the same shaft with cranks directly opposite* (Fig. 267).

In this case each engine is on the dead centre at the same time, and the points of minimum and maximum twisting moment on the crank-pin coincide. Hence the twisting stresses in the crank-shaft are doubled throughout, and the diagram of total twisting moments is obtained by adding together the diagrams of each crank as shown in Fig. 268. Thus M*b*D is the twisting-moment curve for a single engine during a half-revolution, and M*c*D is the twisting-moment curve for the combined cranks when placed directly opposite. M*c*D is obtained by doubling the ordinates *ab*, so that $ac = 2ab$ for each position along the circumferential base MN.

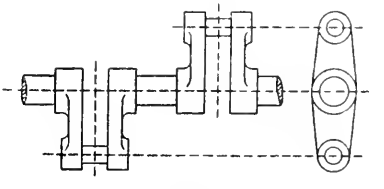

FIG. 267.

From this diagram (Fig. 268), it will be seen that in Case II. the stresses vary through a much wider range than in Case I., the range in the second case being from zero to double the maximum stress

which obtained in the first case. The line of resistance KL, or of mean twisting moment, is raised to twice its former height, and the

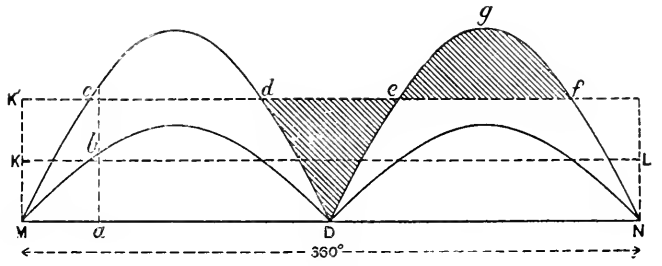

FIG. 268.

shaded areas *egf* and *d*De represent the energy in foot-pounds given up to the flywheel or restored by it respectively, twice every revolution.

This arrangement of opposite cranks is sometimes adopted, especially in small high-speed engines, with the object of balancing.

Case III. *Cranks at right angles.* This is much the most common arrangement of cranks in two-cylinder engines, and its advantages in reducing the range of the twisting stresses will be seen from Fig. 270.

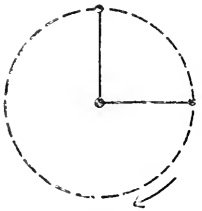

FIG. 269.

This arrangement possesses the further advantage of enabling an engine to start more easily than when the two cranks are opposite, for when one crank is on the dead centre the other is in the position of maximum turning moment, in which position the engine may be started easily—unless it should happen that steam is cut off by the valve-gear before the half-stroke, in which case the engine would have to be moved round till the crank was past the dead centre before starting could take place.

Fig. 270 is constructed by drawing first the twisting-moment curve

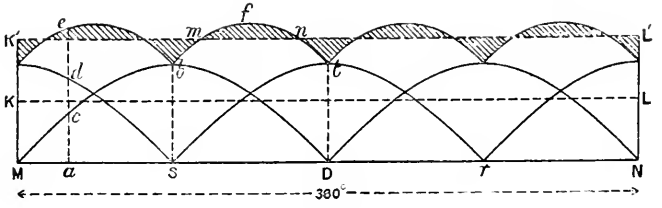

FIG. 270.

as before for one crank, as M*b*D on the half-revolution length MD. Then for the second crank the point *s*, midway between M and D, or

90° ahead of M, is the starting-point for the second curve of twisting moment.

When the engines are equal in all respects, as is here assumed, then the two curves are equal, and the curve *str* is drawn equal to *MbD*. The true curve of twisting moment, *ebft*, etc., is then found by taking the sum of the vertical distances of the separate curves, thus $ac + ad = ae$, and so on.

The line KL is the mean turning-effort line for a single crank, as before, and MK′ = 2MK for the double crank. Or in practice, when the power of the engines is unequal, MK′ is obtained from $(P_1 + P_2 + \ldots)\frac{2}{\pi}$, where P_1, P_2, etc., are the mean effective pressure on each piston respectively for two or more engines.

Case IV. *Triple expansion engines with cranks at* 120°.

In Fig. 272, the curves for a single engine are drawn as before, starting from the point M with the first curve; at a point 120° ahead of M, for the second crank; and at a point 240° ahead of M, for the third crank. The true curve of twisting moments is then obtained by taking the sum of the ordinates $ab + ac + ad$, and constructing the curve by taking as many ordinates as are required.

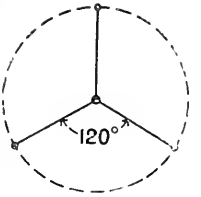

FIG. 271.

From the Figs. 268, 270, 272, it will be observed that by increasing the number of cranks the percentage variation in the turning effort is much reduced, as shown by the shaded areas on each side of the mean line KL.

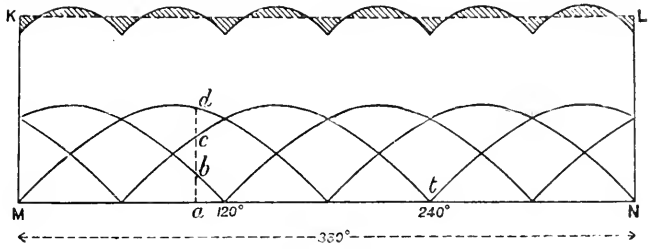

FIG. 272.

Turning Effort on the Crank-pin with Variable Pressure on the Piston.—It has already been shown, in connection with the velocity ratios of piston and crank-pin (Fig. 273), that for any position OC of the crank and CP of the connecting-rod, if OA be drawn perpendicular to ON, velocity of P : velocity of C :: OA : OC, the velocity of the crank-pin OC being constant, and OA varying with the position of the piston in the path of its stroke, MN. Then, having obtained the velocity ratio of two rigidly connected joints, C and P, and knowing that force ratio $= \frac{1}{\text{velocity ratio}}$, the pressures transmitted

at C and P in the element PC are inversely as their velocities. Hence, if OC represent to any scale the pressure Pd on the piston, then OA represents to the same scale the turning effort on the crank-

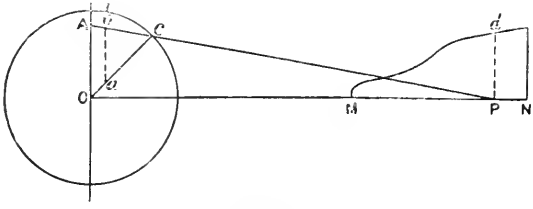

Fig. 273.

pin C. Or, more conveniently, if the pressure Pd per square inch on the piston for any position P be set off on CO as at Ca, and ab be drawn parallel to OA, then ab is the turning effort on the crank-pin per square inch of piston area for the position OC of the crank; for the triangles OAC and abC being similar, OA : OC :: ab : aC. If ab be multiplied by the area of the piston in square inches, the total turning effort is obtained.

Diagram of Effective Pressure on the Piston.—In order to obtain the twisting-moment diagram accurately, it is necessary to find out the net pressure acting on the piston at each point of the stroke, and this can only be obtained by knowing the pressure acting on the two *opposite* sides of the piston; whereas the indicator diagram gives the forward line, and the backward line on the *same* side of the piston.

We therefore require to have a diagram taken from each side of the piston at the same time, and to combine the forward line of the diagram from one side with the backward line of the diagram from the opposite side.

In Fig. 274, A and B are indicator diagrams from opposite sides of the piston, and C and D are effective-pressure diagrams drawn therefrom. Fig. 274, C is the net or resultant diagram for the front end of the cylinder, and D for the back end set up from a horizontal base line MN. The diagrams are drawn by first dividing each figure into ten equal divisions, and each line MN, M'N', similarly. Take, for example, division 1 on each diagram, A, B, and C; a is the total forward pressure (Fig. A) when b is the back pressure at the same time on the other side of the piston (Fig. B); therefore the height at division 1 (Fig. C) is equal to the difference between a and b, and so on for each division. Towards the end of the stroke of the piston, the back pressure due to large compression may be in excess of the forward pressure, and the curve becomes negative and falls below the zero line of pressure MN.

The Figs. C and D (274) are net diagrams for each side of the piston respectively. The effect of the inertia of the reciprocating parts is not here included.

Influence of Inertia of the Reciprocating Parts.—It may be explained

that by the term *inertia* is meant the property possessed by bodies by virtue of which they offer *resistance* to *change of velocity*, whether

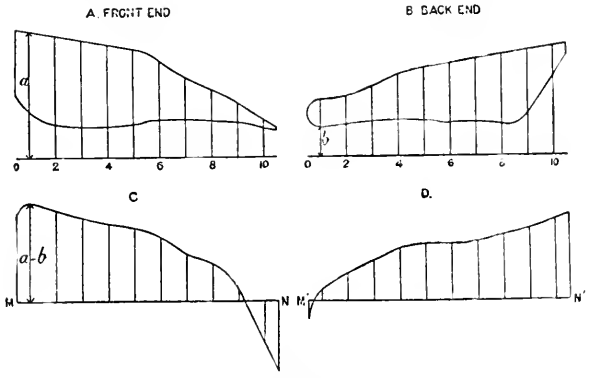

FIG. 274.

that change be from a condition of zero velocity, as when a shot is projected from a gun, or whether the change be from that of a high velocity to a condition of rest, as when the flying projectile is stopped by the target. In each case the inertia of the shot had to be overcome—in the first instance, by the energy in the powder; and in the second instance, at the expense, possibly, of the fractured target upon which the force was expended. Similarly, in order to start the reciprocating parts of an engine from their condition of rest at the beginning of each stroke to that of maximum velocity, if the piston velocity is high, a considerable proportion of the energy of the steam may be absorbed in overcoming the inertia of those parts before its effect can be felt as turning effort on the crank-pin. Fortunately, however, there is no loss of energy due to this cause, for the force required to overcome inertia during the increase of velocity is again restored in the later part of the stroke as pressure on the crank-pin while the crank-pin brings the moving parts to rest.

It is evident, therefore, that before constructing a diagram of turning effort on the crank-pin, we must first "correct the indicator diagram for inertia" by subtracting the amount of the pressure employed in accelerating the reciprocating parts during the early part of the stroke, and adding to the diagram the pressure restored to the crank-pin while retarding those parts during the later portion of the stroke.

The amount of the effort absorbed during acceleration is in all cases equal to that restored during retardation, and the total energy exerted upon the pin (neglecting friction) is unaffected by the work of acceleration and retardation, but the distribution of the turning effort during each half-revolution of the crank may be greatly changed, and its influence upon the regularity of speed of the engine may be considerable.

Force required to accelerate the Velocity of the Reciprocating Parts.—The reciprocating parts include the piston, piston-rod, cross-head, and part of the connecting-rod, and the force required may be easily found by assuming, for the purpose of this problem, that the whole mass of the parts is concentrated at the crank-pin, and rotating with it—the obliquity of the connecting-rod being in the first instance neglected.

The centripetal force exerted when the mass is turned about the centre O (Fig. 275) acts radially in the direction AO, PO, BO, etc., for every position of the crank, and is equal to $F = \frac{Wv^2}{gr} = M\omega^2 r$; and this force may be resolved horizontally, as at PE, and vertically, as at PN, for each position of the crank. Thus, if OP = the centripetal force F, then PE = NO = F cos θ = the horizontal component of the centripetal force F, and is the amount of force employed in accelerating the velocity of the mass at position N in the horizontal direction A to B. The forces may thus be obtained for all positions P of the crank, and they are the same as would be required to accelerate the reciprocating parts in their corresponding ordinary positions, the masses, the horizontal distances, and the intervals of time being the same in either case.

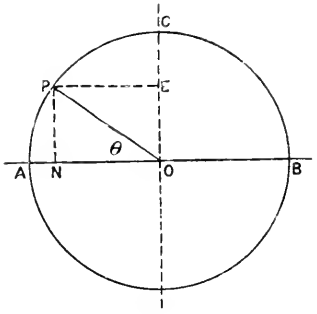

FIG. 275.

The vertical components of the centripetal force take no part in horizontal acceleration, and are therefore neglected.

At the beginning A of the stroke, the whole centripetal force F acts horizontally, it has no vertical component, and cos θ = 1. Therefore acceleration at A is a maximum, and = $F = \frac{Wv^2}{gr} = Wr\mathrm{N}^2 \times 0{\cdot}00034$, where W = weight of reciprocating parts in pounds, r = radius of crank in feet, and N = number of revolutions per minute. In order to apply the force, when obtained, to the indicator diagram, it must be expressed in pounds per square inch of the piston area; the above value of F is therefore divided by the piston area in square inches. Thus, pressure required per square inch of piston to start the reciprocating parts at beginning of stroke

$$= f = \frac{Wr\mathrm{N}^2 \times 0{\cdot}00034}{\text{area of piston}}$$

At the middle of the stroke the whole centripetal force acts vertically, and it has no horizontal component. Here the velocity of the reciprocating parts is a maximum, and there is no longer any force exerted in increasing its velocity any further; the acceleration, therefore, at the mid-positions of the crank is zero.

Beyond this point the reciprocating parts are retarded until they

are brought to rest at the end of the stroke; the forces exerted on the crank-pin in bringing the moving parts to rest are exactly the reverse of those acting upon the piston to generate its velocity during the first half of the stroke.

The distribution of the forces throughout the stroke may be seen by Fig. 276, where AB represents the length of the piston stroke. Set off AC $= f$ as obtained by the above equation, and use the same scale of pounds as is used for the indicator diagram to which the diagram is to be applied. At D, the mid-position of the piston, the acceleration is zero. At intermediate points, as at N, set off NO (Fig. 276) to scale, by measurement of the horizontal component NO from the

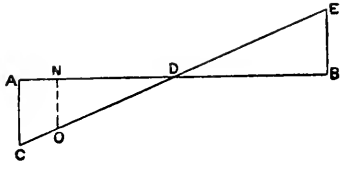

FIG. 276

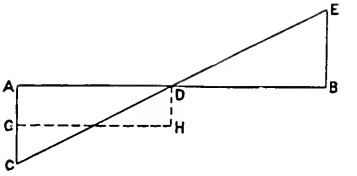

FIG. 277.

diagram (Fig. 275), or by calculation of the value of $f \cos \theta$ for several positions of the crank. If the ordinates so found be joined, the straight line CODE is obtained.

The triangles ACD and BED are equal, and they each represent, by their area, work done (1) by the steam upon the piston to generate velocity, (2) by the reciprocating parts upon the crank-pin during retardation from maximum to zero velocity. Thus, area of triangle ACD = kinetic energy stored up in moving parts on reaching middle of stroke $= \frac{Wv^2}{2g}$. But AD $= r =$ radius of crank, and $r \times \frac{1}{2}$AC $=$ area of triangle $= \frac{Wv^2}{2g}$; therefore AC $= \frac{Wv^2}{gr}$ as before. The same reasoning applies to triangle DEB, which represents energy given up by the reciprocating parts and transferred to the crank-pin.

Illustrations of the Effects of Inertia upon the Pressure transmitted to the Crank-pin.[1]—Suppose first the case of an engine taking steam through the whole length of stroke. Then the indicator diagram is approximately a rectangle = ABCD (Fig. 278). Let the pressure of steam AB = 20 lbs. per square inch, and the pressure to accelerate the piston = 6 lbs. reckoned per square inch of piston area $= \frac{Wv^2}{gr} \div$ area of piston.

If AE be set down below AD = 6 lbs. to scale, and DF above AD = 6 lbs., and points E and F be joined, then the line EKF represents the extent of correction required for the indicator diagram before the pressure transmitted to the crank-pin can be determined.

Between points B and G on the top line of the diagram, set down

[1] See "A Practical Treatise on the Steam Engine," by Mr. A. Rigg.

below BG ordinates m equal to and corresponding with ordinates n between lines EK and AK. Similarly, set up above GC ordinates m equal to and corresponding with ordinates n between KF and KD. Then ALGHD is the corrected diagram, from which is measured the pressure transmitted to the crank-pin.

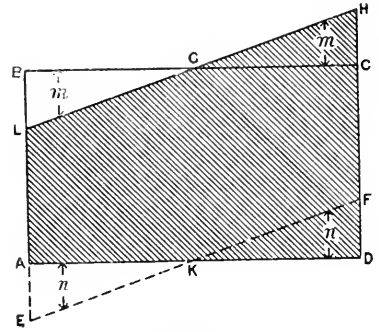

FIG. 278.

Though the pressure of the steam upon the piston is assumed uniform throughout, the pressure transmitted to the crank-pin is very variable, being 14 lbs. at the beginning of the stroke, 20 lbs. in the middle of the stroke, and 26 lbs. at the end of the stroke; and since the effects of inertia rapidly increase with the speed, the ratio of increase being as the square of the velocity, the diagram shows how seriously high the pressure on the crank-pin may become at high speed towards the end of the stroke, especially when the pressure of the steam is retained throughout the stroke.

These high inertia effects are, however, greatly modified by working the steam expansively, and by a judicious use of steam-compression at the back of the piston.

If the steam be worked expansively in the cylinder, the effect in reducing the excessive pressure on the crank-pin at the end of the stroke will be seen from the diagram (Fig. 279). SSS is the assumed

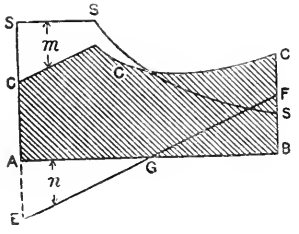

FIG. 279.

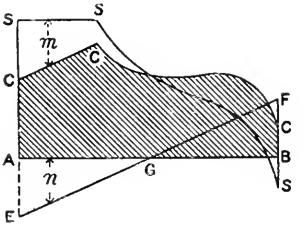

FIG. 280

diagram of net effective steam-pressure on the piston, set up from the base-line AB. Line EF is the inertia line, and the piston-pressures S, S, S, corrected for inertia by making ordinates $m = n$ on the same vertical line, and above or below SSS as required, give the line CCC, the ordinates of which at the various parts of the stroke give the actual pressures transmitted to the crank-pin.

Fig. 279 shows the effect of expansion only, and Fig. 280 of expansion and compression in tending to make the pressure more uniformly equal throughout the stroke, as shown by line CCC.

Influence of Weight of Reciprocating Parts in Vertical Engines.—On the upward stroke of the piston, the weight of the reciprocating parts acts against the steam throughout the whole stroke. Hence, if the weight of those parts expressed in pounds per square inch of piston area be set up from A = AF (Fig. 281), to the same scale as AC, and FG be drawn parallel to AB, then FG is the new base-line, which will coincide with the base of the net steam-pressure diagram to be corrected for effects of inertia and weight of moving parts. A is the beginning of the stroke, and the ordinates *m* are subtracted from, while the ordinates *n* are added to, the ordinates of the net steam-pressure diagram, in order to obtain the amount of pressure transmitted as turning effort on the crank-pin. For the downward stroke

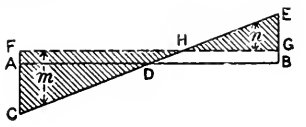

FIG. 281.

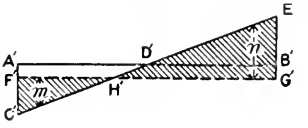

FIG. 282.

the case is reversed, the weight of the reciprocating parts acting with the steam-pressure throughout the whole stroke.

In Fig. 282, if A'C' be drawn as before, representing the force required to generate the required velocity in the moving parts at the commencement of the stroke, then, since on the downward stroke, part of this force (namely, A'F') is supplied by the weight of the parts, an amount of force equal to F'C' only is required to be provided by the steam to generate velocity.

The line F'G', drawn a distance below A'B' equal to the weight of the moving parts per square in. of piston area, is the new base upon which the net steam-pressure diagram will be placed to be corrected for effects of velocity and gravity upon the moving parts. The ordinates *m* will be subtracted from and the ordinates *n* added to the corresponding ordinates of the steam-pressure diagram, A being considered the beginning of the stroke.

The work done (= area AG) in lifting the reciprocating parts during the upward stroke, and thus reducing the effective work on the crank-pin, is compensated for by the restoration of the same amount of work to the crank-pin during the downward stroke (= area A'G'), the weights during this stroke assisting the steam-pressure. There is, therefore, no loss due to the weights of the moving parts.

When the Obliquity of the Connecting-rod is included.—When the influence of the short connecting-rod is included, the problem of finding the inertia line is more complex, but for practical purposes it is usually sufficient to find the acceleration at the two ends of the stroke, and to find the point of zero acceleration. Then, by drawing a free curve through these three points, we may obtain with sufficient accuracy the inertia line required.[1]

[1] For a construction for finding all points in the curve, see the chapter on "Balancing of Engines."

First, to find the point B (Fig. 283), or the position of the piston at the point of its maximum velocity, where its acceleration is zero. This may be found with almost absolute accuracy by a simple geometrical construction, thus:

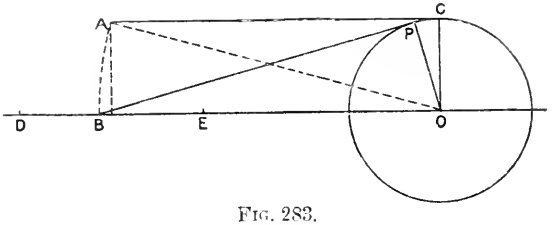

Fig. 283.

Draw OC (Fig. 283) to scale equal to the crank radius, and draw AC at right angles to it and equal in length to the connecting-rod. Join OA, and rotate the right-angled triangle OCA about O. Or—

$$BO^2 = l^2 + r^2$$
$$BO = \sqrt{l^2 + r^2}$$

B is the point required representing the position of the piston in the path DE of the stroke at the moment of maximum velocity. It is also the point of zero acceleration on the inertia curve.

At the point D, the beginning of the stroke DE (Fig. 284), the accelerating force DA is found in the following way. When the crank is passing the dead centre and the connecting-rod is finite, the

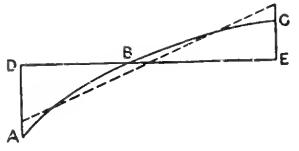

Fig. 284.

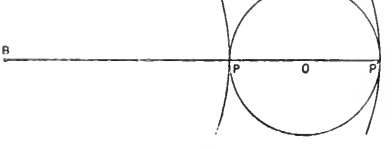

Fig. 285.

centripetal force includes two effects: first, that due to the rotation of the mass about the centre of the crank-shaft O; and, secondly, that due to its tendency to rotate also about the centre B of the connecting-rod BP (Fig. 285). Thus the acceleration at P is proportional to the sum of the curvatures drawn with radii OP and BP respectively. At the other end of the stroke, when the crank is passing the centre P′, the centripetal force due to the motion of the connecting-rod acts in the same direction as that of the crank, and the acceleration at P′ is proportional to the difference of those curvatures. Hence, if the connecting-rod $= n$ times the radius r of the crank, then the accelerating force at P $= \frac{W}{g}\left(\frac{v^2}{r} + \frac{v^2}{nr}\right) = \frac{Wv^2}{gr}\left(1 + \frac{1}{n}\right)$, and the force at P′ $= \frac{W}{g}\left(\frac{v^2}{r} - \frac{v^2}{nr}\right) = \frac{Wv^2}{gr}\left(1 - \frac{1}{n}\right)$. If, then, the value of the centripetal

force at P and P' (Fig. 285) be set off vertically from D and E, and = DA and EC respectively (Fig. 284), and a free curve ABC be drawn, then ABC is the curve of inertia required with which to correct the net pressure-diagram on the piston when determining the pressure transmitted to the crank-pin. This subject will be dealt with more fully in the chapter on "Balancing of Engines."

If the speed of the engine exceed a certain number of revolutions, the pressure necessary to accelerate the piston may be greater than that of the steam-pressure in the cylinder, in which case the crank

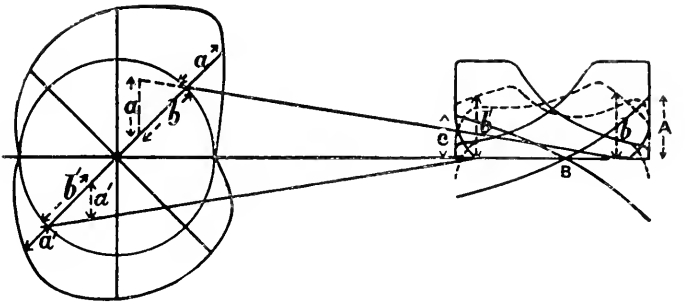

FIG. 286.

will at first pull the reciprocating parts during the early portion of the stroke beyond which the steam-pressure will begin to act, and the reciprocating parts close up against the crank-pin and crosshead-pin with a more or less serious knock. This is an indication that the engine is working beyond its limit of speed for the steam-pressure employed. By working at a higher initial steam-pressure, and cutting off earlier in the stroke, the knock may be avoided.

EXAMPLE.—To find the effect of inertia at the ends of the stroke in the following example, and to draw the curve of crank-effort :—

Weight of reciprocating parts = 292 lbs. ; length of crank, 6 in. ; diameter of cylinder, 10 in. ; revolutions = 300 per minute ; ratio of crank to connecting-rod = 1 : 4·5.

$$\text{Then force at beginning and end of stroke} = \frac{Wr^2}{gr}\left(1 \pm \frac{1}{n}\right)$$

$$= \frac{292 \times (2\pi r N)^2}{32 \times r \times 60 \times 60}(1 \pm \tfrac{2}{9})$$

$$= \frac{292 \times 39{\cdot}4 \times 0{\cdot}5 \times 300 \times 300}{32 \times 60 \times 60}(1 \pm \tfrac{2}{9})$$

$$= 4494(1 \pm \tfrac{2}{9})$$

$$= 5492{\cdot}6 \text{ or } 3495{\cdot}3$$

$$\text{But } p = \frac{P}{A} = \frac{4494}{10^2 \times 0{\cdot}7854}(1 \pm \tfrac{2}{9})$$

p = 69·9 and 44·5 lbs. per square inch of piston.

Fig. 286 is drawn with the data here given, lengths A and C being set off to scale equal to 69·9 and 44·5 at the beginning and end of the stroke respectively, and the point B is found, as already explained, by finding geometrically the position of the piston when the crank and connecting-rod are at right angles. A free curve of inertia is then drawn, and the diagram of net effective pressure on the piston is set off, as shown by dotted lines, by measuring from the inertia curve to the top line of the indicator diagram (see Fig. 279), and resolving the pressure as shown to find its tangential effect on the crank-pin.

Thus, if the net pressure b, measured from the base line to the corrected indicator diagram, shown dotted, be set off on the corresponding crank position as shown, and the vertical component a, intercepted by the connecting-rod, be set off on the crank position produced, then, by joining the outer extremities of the lines a, the curve of turning effort on the crank-pin is obtained.

It may here be pointed out that though the force absorbed in accelerating the moving parts is restored during retardation of those parts, yet in practice there will be a waste of energy to a greater or less degree at the end of each stroke, if owing to slack bearings there is a "pound" or shock as the crank turns the centre and the moving parts change the direction of motion. With slack main bearings, the crank-shaft may be lifted on the up-stroke, and possibly bent or sprung on the down-stroke. To avoid such effects, the brasses should be kept in good condition, having a minimum of slackness, and the energy in the piston at each end of the stroke should be absorbed by a judicious use of steam-cushioning on the exhaust side, so that the piston may be brought to rest as nearly as possible without shock.

CHAPTER XVI.

FLYWHEELS.

FLUCTUATION of speed of the crank-shaft during each single revolution of the shaft may be reduced by the use of a flywheel, whose mass and radius of rotation provide a large moment of inertia, absorbing energy when the turning effort is in excess of the resistance, and restoring it to the shaft when the resistance is in excess of the effort.

The extent to which the turning effort transmitted to the crank-pin varies above and below the *mean* turning effort is well seen by the diagrams already given.

Thus in the case of a single-crank engine this variation is large, while in triple engines with three cranks at 120° the variation is reduced to within very narrow limits.

It is clear, therefore, that for the single-crank engine a large and heavy flywheel is much more necessary than for the three-crank engine of the same power.

To design a flywheel to meet the requirements of a given case, it is necessary to find out first what is the extent of the periodical fluctuation of energy, above and below the mean energy transmitted during a single revolution.

For this purpose a turning-effort diagram is drawn by the method already explained. Thus, in Fig. 287, curve *abcde* represents the turning effort for a single-crank engine during one whole revolution,

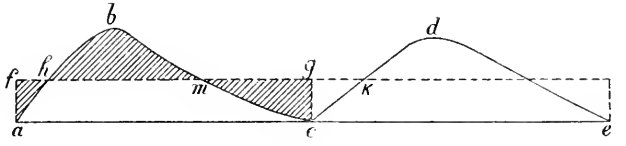

FIG. 287.

ae. Of the two curves *abc* and *cde*, that which shows the larger excess of energy is chosen for the calculation. The line *fg* is the mean of the two curves. The resistance is assumed constant. Then the work E done during one stroke is represented by the area *abc*, which area is equal also to the rectangle *afgc*. If area *hbm* = ΔE, then $\Delta E \div E$ is called the coefficient of fluctuation of energy.

For multiple-crank engines the turning-effort curves for the separate cranks are combined (Fig. 288), and the coefficient of

fluctuation of energy is now the ratio of one of the areas projecting above the mean-effort line, as the area *efg* to the total effort *abcd* during the stroke.

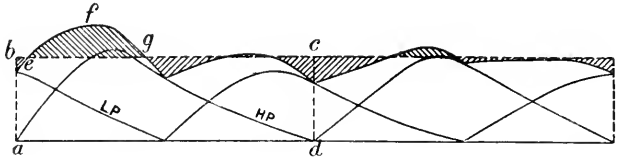

FIG. 288.

To find the value in foot-pounds of the area *efg*, obtain by means of a planimeter, or by simple measurement to any scale, the ratio of the area *efg* to the area *abcd*. Then, since the area of *abcd* is known, being equal to the work in foot-pounds done by the steam upon the piston or combined pistons during the stroke, the area *efg* may be obtained at once.

To find the weight of flywheel, having given the coefficient of fluctuation of energy and the limit of variation of speed.

Fluctuation of the force acting as turning effort on the crank-shaft is, as a necessary consequence, followed by fluctuation of speed of rotation. This is objectionable in all engines, but is especially so in some departments of engineering, such as electric lighting; and although the speed of rotation cannot be made absolutely uniform, so long as the turning effort is not uniform, the variation may be reduced to any required extent by increasing the mass and radius of the flywheel.

If W = the weight of the rim of the flywheel, the weight of the arms being neglected; r = the radius to centre of figure of the rim; v = velocity of rim at radius r in feet per second; and ω = angular velocity of wheel:

$$\text{Then the energy of the wheel} = \frac{Wv^2}{2g} = \frac{Wr^2\omega^2}{2g}$$

and for any addition of energy ΔE, such as area *hbm* (Fig. 287), we have an increase of speed from ω_1 to ω_2, and—

$$\Delta E = Wr^2\frac{\omega_2^2 - \omega_1^2}{2g}$$

that is, for a given value of ΔE the change of speed will vary inversely as the weight and as the square of the radius of the wheel.

The radius of the wheel is determined somewhat by considerations of appearance and proportion, according to the discretion of the designer, always remembering that the peripheral speed of the rim should not exceed 100 ft. per second as a maximum. But having determined the radius, the weight required to reduce the variation of speed to within given limits is obtained as follows:—

$$\Delta E = \frac{W(v_1^2 - v_2^2)}{2g}$$

$$= \frac{W(v_1 + v_2)(v_1 - v_2)\,v}{2gr}$$

$$= \frac{W \times 2v \times kv}{2g}$$

$$W = \frac{\Delta E \times g}{k\ v^2}$$

where v_1 = maximum velocity, v = mean velocity, and v_2 = minimum velocity, also k = coefficient of fluctuation of speed $= \frac{v_1 - v_2}{v}$. The value of k varies from $\frac{1}{20}$ for punching and shearing machines to $\frac{1}{200}$ to $\frac{1}{500}$ for electrical machinery.

This variation of speed has to do with the speed fluctuation during a single revolution, and has nothing to do with the fluctuation of speed from minute to minute, which is the work of the governor.

The stresses in a flywheel are of two kinds: (1) those due to centrifugal force, and (2) those due to inertia.

1. The centrifugal force acting radially in the wheel $= \frac{Wv^2}{gr}$ per foot of rim, measured on the mean circumference, W = weight of the rim per foot of length; r = radius of wheel to centre of rim in feet; v = velocity of rim in feet per second at radius r.

The action of this force in tending to burst the rim of the wheel may be considered as equivalent to that of steam-pressure acting internally on the circular shell of a boiler, and as, in the case of a boiler, the tendency to burst the wheel in a plane through any diameter $= F \times d$, where F stands for centrifugal force per foot of rim, and d the mean diameter of the wheel in feet; and the stress per square inch on the material $= f = \frac{\text{load}}{\text{area}} = \frac{Fd}{2a}$, where a = area of section of rim in square inches.

In addition to the tendency to fracture of the wheel just referred to, the centrifugal force tends also to bend the rim, between the arms, concave to the centre. There is also a tensile stress upon the arms.

2. The stresses due to inertia of the mass of the wheel may become large when there is any more or less sudden variation of the speed of the engine, the effect of which is to put a bending stress upon the arms, which may be considered as cantilevers loaded at the rim end and secured at the boss of the wheel.

EXAMPLE.—A flywheel with a cast-iron rim 15 ft. mean diameter runs at a speed of 90 revolutions per minute. The section of the rim = 150 sq. in. Find the stress on the rim tending to separate it through any diameter; also find the stress per square inch on the material of the wrought-iron strap plates, 8 in. × $1\frac{1}{2}$ in., one on each side of junction of segment.

Then, weight per foot of rim measured on mean circumference = 150 × 12 × 0·26 = 468 lbs.

$$\left.\begin{array}{l}\text{Centrifugal force F per}\\ \text{foot of rim}\end{array}\right\} = \frac{Wv^2}{gr}$$
$$= WrN^2 \times 0{\cdot}00034$$
$$= 468 \times 7{\cdot}5 \times 90 \times 90 \times 0{\cdot}00034$$
$$= 9666{\cdot}5$$

This is the radial force per foot of rim. Resolving this force at right angles to a diameter, then the total force tending to separate the rim through a diameter

$$= F \times d$$
$$= 9666{\cdot}5 \times 15$$
$$= 144997{\cdot}5 \text{ lbs., or } 64{\cdot}7 \text{ tons}$$

Stress f per square inch in wrought-iron straps holding segments of wheel together

$$= f = \frac{\text{load}}{\text{area}} = \frac{144997{\cdot}5}{2 \times 2(8 \times 1{\cdot}5)} = 3021 \text{ lbs. per sq. in.}$$

This neglects the influence of the arms in resisting tensile stress.

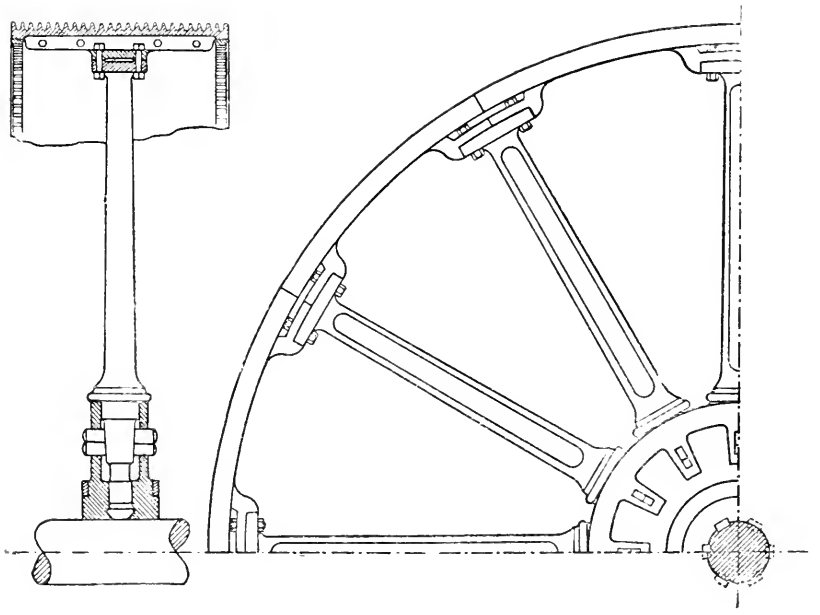

Fig. 289.

Fig. 289 is a combined flywheel and rope drum as made by Messrs. Musgrave of Bolton. The construction will be understood from the drawing.

Fig. 290 is a type of flywheel made for rolling mills in the United

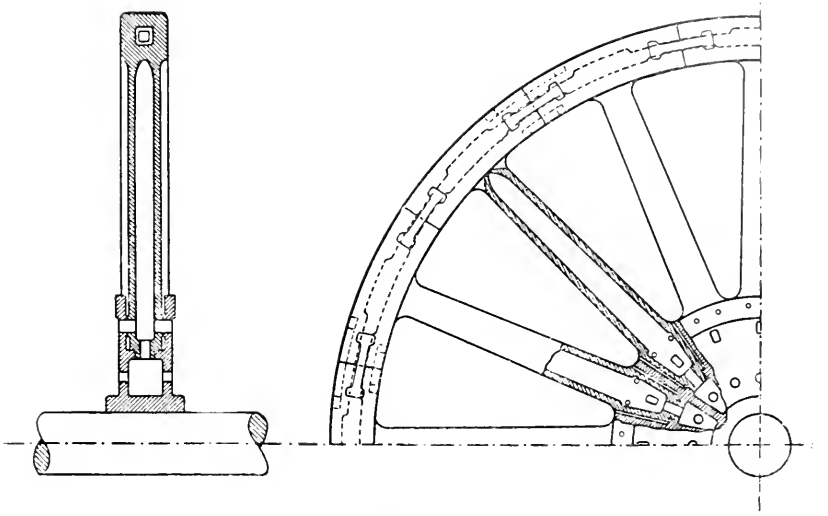

Fig. 290.

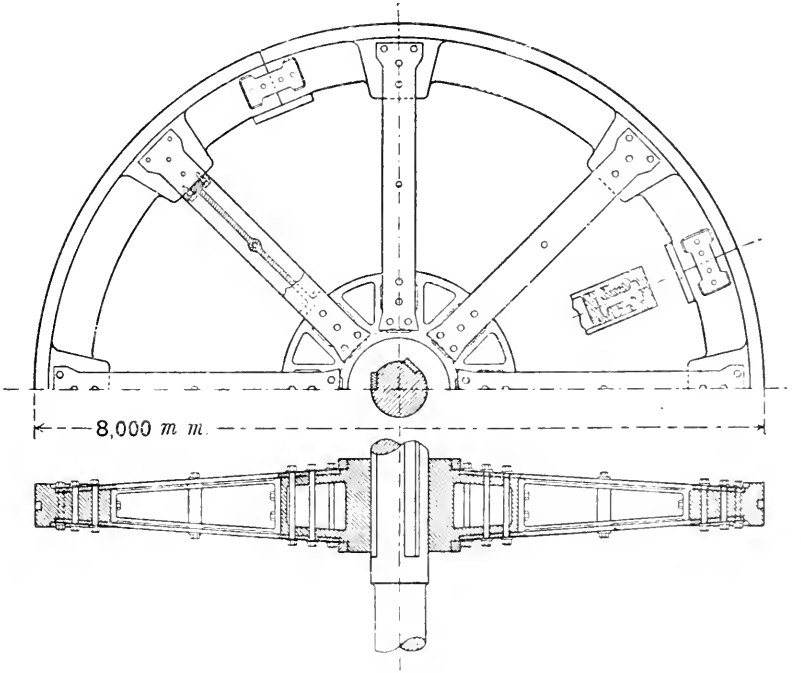

Fig. 291.

States. It was recently described by Mr. John Fritz.[1] This design of wheel is made varying in diameter from 20 to 30 ft. It has been subjected to very severe treatment, and is said never to have been known to fail.

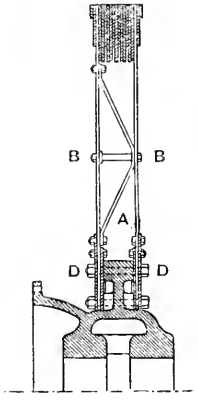

Fig. 292.

The rim is cast in segments, each segment being cast with its accompanying arm; and both segment and arm are cast hollow as shown. The holes in the segments are made smaller at the ends so as to allow for the metal taken out for the connecting T-pieces. The steel limbs or T-pieces are designed so that the rim is as strong at the joints of the segments as elsewhere.

It will be noticed that at the centre of the wheel there is a space left of about $\frac{1}{4}$ in. on both sides of each arm. This is filled with oakum, and driven hard after the wheel is finished and in its place.

Fig. 291 shows a design for a flywheel[2] by the "Duisburger Maschinenbau-Actien-Gesellschaft" with a cast-iron rim made in segments, a cast-iron boss, and steel-plate arms secured in pairs to the boss

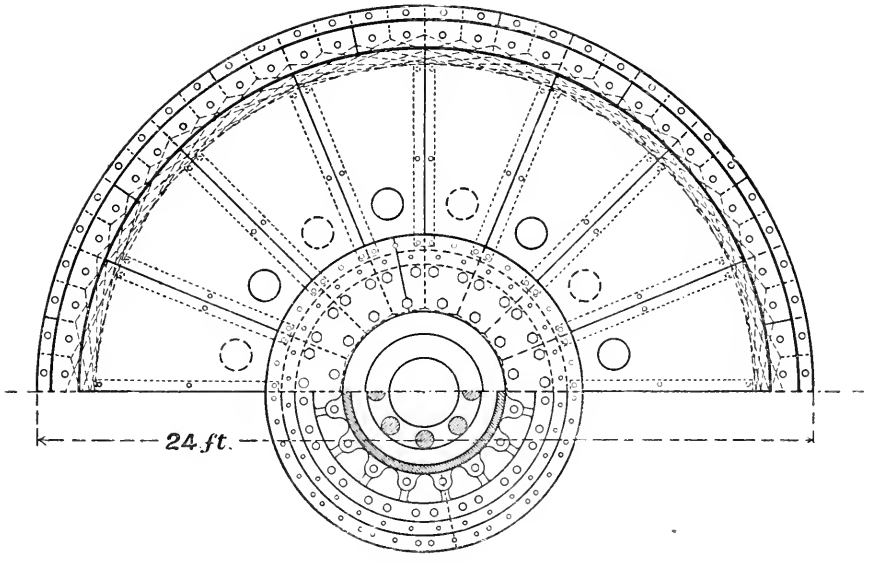

Fig. 293.

and rim as shown, with a cast-iron distance-piece between the pairs of arms.

[1] *Cassier's Magazine*, vol. 16, No. 2. [2] From "Stahl und Eisen," May, 1899.

Figs. 292 and 293 [1] show a form of built-up flywheel composed of flat steel plates, constructed by the E. P. Allis Company of Milwaukee, U.S., for a cross-compound engine, 32-in. and 62-in. cylinders, and 5-ft. stroke. The speed at which the wheel is intended to run is 75 revolutions per minute, giving a speed at the circumference of 90 ft. per second.

Fig. 292 is a side elevation of half the wheel and a section through half the boss. The boss is made of cast iron, and is 8 ft. extreme diameter. Against each face of the boss are two annular steel plates, A, Fig. 292, which are 1 in. thick and 23 in. wide, and split on the diameter. From these plates extend the web-plates, sixteen in number, to the extreme outside diameter of the wheel. Between the plates on the opposite sides of the boss are truss-pieces, 1 in. by 8 in., bolted at the ends with two ½-in. bolts, and having at the centre two 1¾-in. bolts as struts. The truss-pieces are put at the joints between the web-plates. Outside the web-plates are cover-plates D, 1 in. thick and 27 in. wide, also split on the diameter. Through the outside cover-plates D, web-plates B, and inside plates A, are forty 2¾-in. bolts. In addition there are forty-eight 1½-in. bolts on each side, through the cover-plates and web-plates. The section of the rim between the web-plates consists of thirteen 1-in. steel plates placed side by side and joined on the ends as shown. Outside of the web-plates, on each side of the rim, are 1-in. by 12-in. plates, forming cover-plates around the entire rim. Still outside this is another strip 1 in. by 5 in. all round the wheel. Countersunk rivets 1¾ in. diameter hold the plates and rim together.

"A good average value for the energy necessary to be stored in fly-wheels for electric lighting purposes is 2·9 foot-tons per electrical horse-power, and in traction plant 4 foot-tons."

"Built steel wheels may have a peripheral velocity up to 130 ft. per second." [2]

[1] From the *Railroad Gazette*.

[2] See paper by Mr. A. Marshall Downie, B.Sc. (*Engineering*, January 17, 1902).

CHAPTER XVII.

ENGINE DETAILS.

Cylinders.—The strength of cylinders, as of all other parts of steam-engines, is initially dependent upon the pressure of the steam to be used. The thickness of the cylinder must be sufficient to safely withstand the maximum steam-pressure and to ensure a safe casting throughout.

The general proportions of the cylinder depend upon the relation between the length of stroke and the diameter of the cylinder. This value varies from 1·5 to 2·0 for ordinary horizontal mill-engines, and from 1·25 to 0·6 for vertical quick-running engines.

The steam-ports are made sufficiently long (generally from 0·6 to 0·8 of the cylinder diameter) to admit the steam promptly and through as large an area as possible when the valve begins to uncover the port, so as to give the piston the full benefit of the maximum steam-pressure from the commencement of the stroke. A long port has the additional advantage of permitting a smaller travel of valve for a given area of port opening.

The dimensions of the port are also governed by the necessity of providing ready egress for the steam during exhaust. Getting the steam out during exhaust is a more difficult problem than getting the steam into the cylinder. Large ports, however, involve large clearance volume and large clearance surface, and, for reasons already given, both of these should be reduced to the lowest possible limits.

The area of steam-port is made sufficient to permit of a velocity of flow not exceeding 6000 ft. per minute;

$$\text{Area of port} = \frac{\text{area of piston in sq. in.} \times \text{piston speed in ft. per min.}}{6000}$$

By turning the face of the piston in the lathe, and where possible also the inner surface of the cylinder cover, the clearance volume may be more readily reduced to the lowest practical limit than when the castings are left rough.

The clearance space permitted between the piston and cylinder end varies from $\frac{1}{8}$ in. to $\frac{1}{2}$ in., depending on the size of the engine.

Where the clearance space is very small, additional care is necessary in the adjustment of brasses at the various joints between the piston and the crank-pin.

Cylinder-liners and Barrels.—In order that a hard surface shall be presented to the rubbing action of the piston, it is usual to fit a separate working barrel made of hard, close-grained metal, forced or shrunk into the cylinder, or secured by a flange at the bottom end fitted with bolts, as shown in Fig. 294. The cylinder-cover end of the liner is left free to expand. The space between the working-barrel or liner and the cylinder-casting constitutes the steam-jacket, and the joint at the cover end of the liner is made steam-tight and at the same time allowed to expand freely by methods such as that shown in Fig. 294.

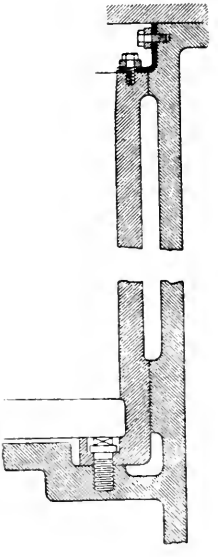

FIG. 294.

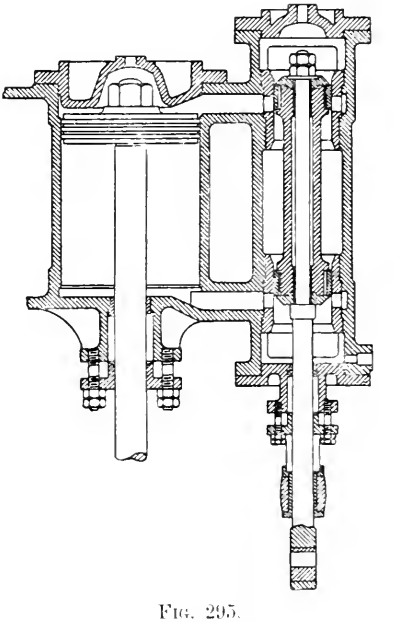

FIG. 295.

Many examples of cylinders are given throughout this book. Fig 295 shows a cylinder fitted with a piston-valve.

Cylinder Patterns.—Where a great variety of sizes of engines are made, it becomes a matter of prime importance to keep down the number of separate patterns, for a large stock of patterns represents a large capital, which is to a considerable extent unproductive.

In making a series of engines of uniform type but somewhat varying powers, one head pattern can be used for the two ends of the cylinder with but slight alteration, and by varying the length of the barrels the cylinder pattern can be used for a variety of piston strokes.

It is customary in many firms to keep engine beds to standard strokes, and make the total initial pressure and power of tandem

compound cylinders equal to the half of the total initial pressure of a cross-coupled or side-by-side compound engine, or equal to that of the high-pressure cylinder only.

Thus, taking a cross-coupled compound engine, 18 in. and 30 in. cylinder diameters, by 42 in. stroke, to find the compound tandem engine the combined power of whose cylinders is equal to that of the high-pressure cylinder of the $18'' \times 30'' \times 42''$ cross-coupled engine, the stroke to remain the same; then, since the power is proportional to the squares of the cylinder diameters, we have—

$$\frac{18^2}{2} = \frac{324}{2} = 162; \text{ and } \sqrt{162} = 13 \text{ in. nearly}$$

that is, a 13-in. diameter high-pressure cylinder is equal to one half the power of the 18-in. cylinder. By the addition of a suitable low-pressure cylinder to work tandem with the 13-in. high-pressure cylinder, the total power will then be equal to that of the 18-in. high-pressure cylinder, then—

$$\frac{30^2}{2} = 450; \text{ and } \sqrt{450} = \text{about } 22 \text{ in.}$$

that is, the heads of a cross-coupled compound engine $13'' \times 22'' \times 30''$ stroke would be used as a $13'' \times 22'' \times 42''$ stroke tandem compound engine, the beds, rods, bearings, etc., being the same as for a single engine of the $18'' \times 30'' \times 42''$ size.

This gives a well-designed arrangement in both cases, and minimises the number of patterns required.

Low-pressure cylinder patterns of small engines are used for high-pressure cylinders of large engines by simply lengthening the barrel.

The above remarks assume a fairly uniform piston speed in the above engines, varying not more than 10 per cent. of, say, 600 to 660 ft. per minute.

The splitting up of cylinder castings also reduces the risk of loss by defective casting, and if an engine is wanted in a hurry, the cylinder can be treated in several separate machines, and the parts assembled when machined in a much shorter time than is possible if the cylinder is machined as a single casting. This, of course, does not apply to the case where a large number of engines of standard pattern are passing through special machines, or where the time lost in fitting the assembled parts would be greater than that lost in the processes of machining the cylinder as one casting.

Fig. 296 shows a cylinder stuffing-box and gland fitted with Ward's metallic packing. A is the piston-rod, which must be true and free from grooves if the arrangement is to be steam-tight; with this packing a brass bush is not necessary at the bottom of the stuffing-box. B is the stuffing-box, which holds the packing. C is the gland-cover, which has a perfectly true face on the inner side, where the packing-pieces E and F bear upon it and make a steam-tight joint.

The packing-pieces E are made of anti-friction metal, lined on the outside with gun-metal to stiffen them. The pieces F make joints

with the pieces E (see plan of figure), and prevent the passage of steam at the partings of those pieces. The pieces E extend from the face of the gland nearly to the top of the stuffing-box.

A hoop, G, surrounds the packing-pieces. It is bevelled as shown, and fits against a corresponding face on the packing-pieces E. The

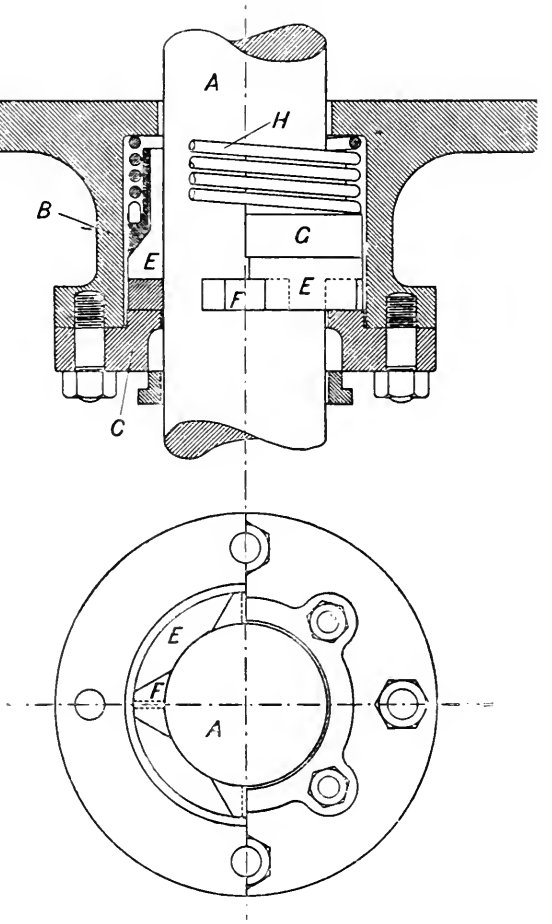

FIG. 296.

hoop G is pressed against by two springs, H, which keep the packing-pieces up to their work on the rod and the face of the gland. There is a further small gland and stuffing-box on the outer side of the main gland-cover, which is sometimes fitted to keep the joint dry; it is packed with ordinary packing.

Pistons.—A perfect piston would be one which was at the same time both steam-tight and frictionless. In practice, in order to make the piston steam-tight, various forms of spring rings are used, which, while rendering the piston steam-tight, also set up more or less friction against the cylinder walls during the stroke of the piston.

The packing-rings of pistons have themselves an initial spring or tendency to open themselves against the cylinder-barrel, by being turned in the first instance as a ring to a slightly larger diameter than the cylinder-barrel, after which the ring is cut obliquely so that the ring may be compressed

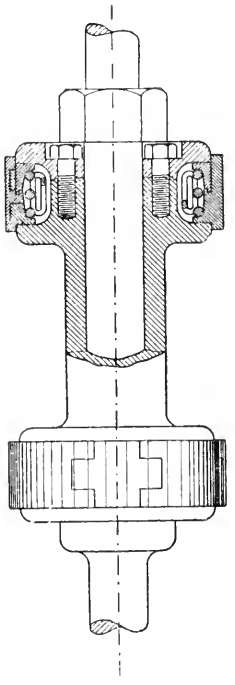

Fig. 297.

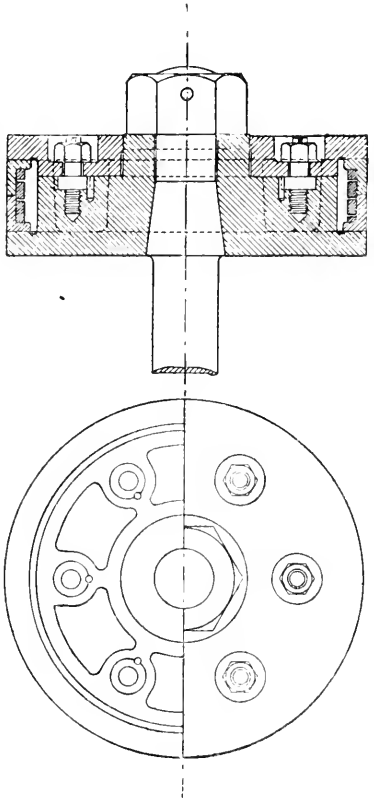

Fig. 298.

and closed to fit the barrel. The steam is prevented from passing through the oblique slit in the ring just made by the insertion of a gun-metal tongue-piece, A, fitting in a groove cut right across the slit (see Fig. 299).

For the high-pressure pistons of marine engines, and also of locomotives, the packing-rings are generally small square spring rings of cast-iron or bronze, without springs behind them.

Fig. 298 is a good type of stationary engine piston.

Figs. 299 and 300 are typical examples of cast-steel pistons as made for marine work. They are much lighter than cast-iron pistons of the older type of the same diameter, and, being conical in shape, they are also stiffer and more rigid.

The small spiral springs behind the packing-ring in Fig. 299 force

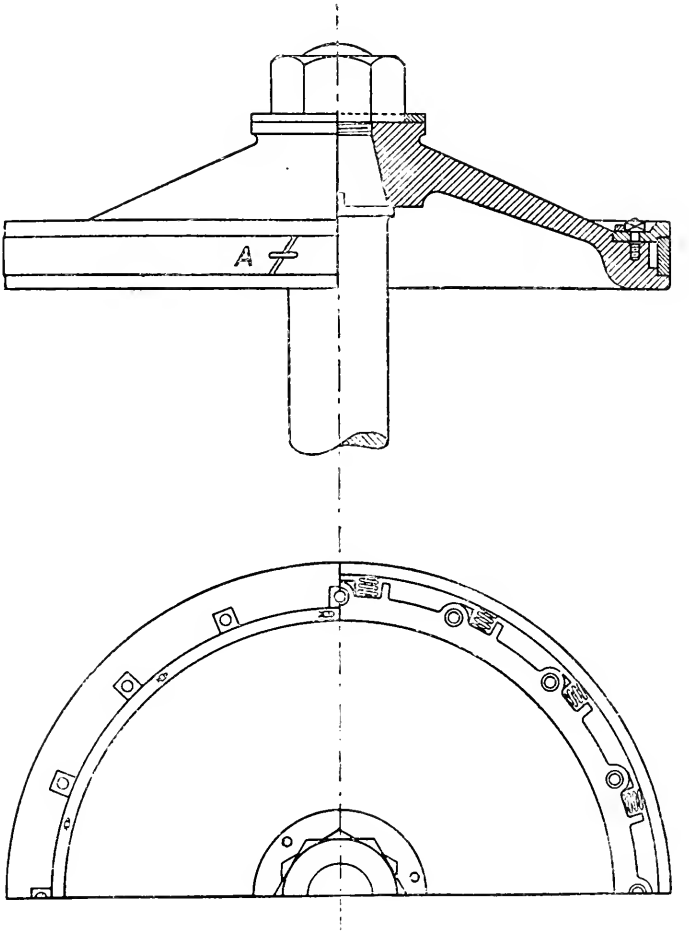

FIG. 299.

the ring against the cylinder-barrel, and they are capable of accurate and uniform adjustment. These springs are compressed so as to exert a pressure of about 2 lbs. per square inch of the bearing surface of the packing-ring.[1]

[1] See Sennett and Oram, "The Marine Steam Engine," p. 231.

Too much care cannot be taken to obtain on the one hand a steam-tight piston, and on the other hand to secure steam-tightness with a minimum of friction. In horizontal engines the friction is further increased by the *weight* of the piston, and in horizontal stationary engines the practice of marine engineers of using light steel pistons might be followed with advantage.

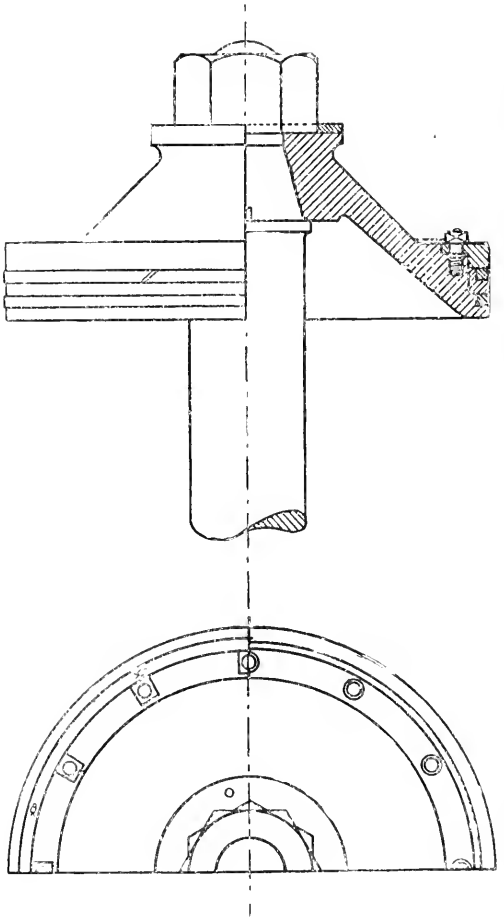

FIG. 300.

Fig. 302 represents views of a piston-packing having a double adjustment, as made by Messrs. Lockwood and Carlisle. The piston-ring is in two parts, and within the two half-rings is a compound spring, one part being helical, as shown in Fig. 302, and tending to press the packing-rings outwards against the cylinder walls ; and another part having a tendency to press the rings apart against the internal faces of the piston-flange and the junk-ring. This prevents the steam from passing the piston through the back of the packing-ring.

Fig. 297 is a piston-valve fitted with the same kind of packing and spring-ring.

Piston-speed varies in ordinary practice from about 300 to 400 ft. per minute in small factory engines, to about 800 ft. per minute for marine engines, and over 1000 ft. per minute for the locomotive.

The *piston-rod* is designed to resist safely the stresses due to the maximum load on the piston, and the area of the rod is calculated at its weakest part. This is usually at the cotter end of the rod, where the method of connection is by a cotter to the cross-head (see Fig.

303). Here the stresses change direction each stroke, being compressive during the outward stroke and tensile during the inward stroke; and consequently the factor of safety must be a large one. The safe stress per square inch at this section for steel piston-rods is 8000 lbs. per square inch. At the other end of the piston-rod, where the rod is turned down to take the nut, the weakest part is of course at the bottom of the screw-thread. It will be noticed, however, that this part is subject to tensile stress only.

Cross-heads.—The cross-head forms a head for the purpose of providing a bearing or support at the outer end of the piston-rod, and to which the connecting-rod is attached by a pin passing through the cross-head. This pin is sometimes called the *gudgeon*. The cross-head varies considerably in design, depending on the shape of the guides and on the extent to which adjustments are fitted for taking up wear on the brasses and on the guides.

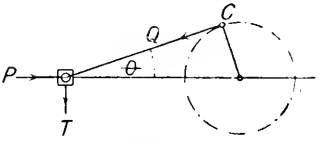

FIG. 301

The cross-head and guides prevent the oblique thrust or pull of

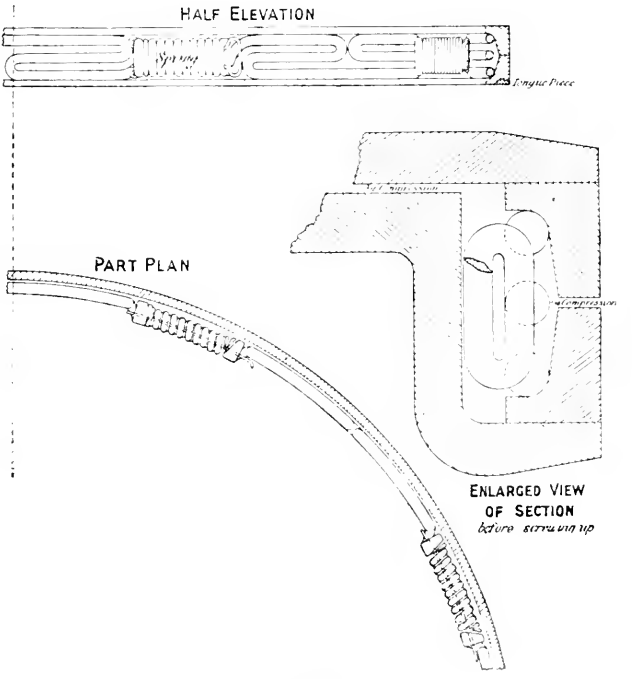

FIG. 302.

the connecting-rod from bending the piston-rod This can be seen

by reference to Fig. 301. When the piston is being impelled forward so that the rotation of the crank-pin is clockwise, then, if the connecting-rod makes an angle θ with the centre line as shown, the resistance at the crank-pin C causes a backward thrust Q through the connecting-rod, which may be resolved into two forces, one, = P, tending to compress the piston-rod, and the other acting normally to the guides, as shown by T.

$$\text{Then } Q = \sqrt{P^2 + T^2}$$
$$\text{also } P = Q \cos \theta$$
$$\text{and } T = Q \sin \theta$$

Again, when the piston is being driven in the opposite direction by the steam, the resistance of the crank-pin causes a downward pull on the cross-head end of the piston-rod, the tendency again being to cause a downward thrust upon the guides.

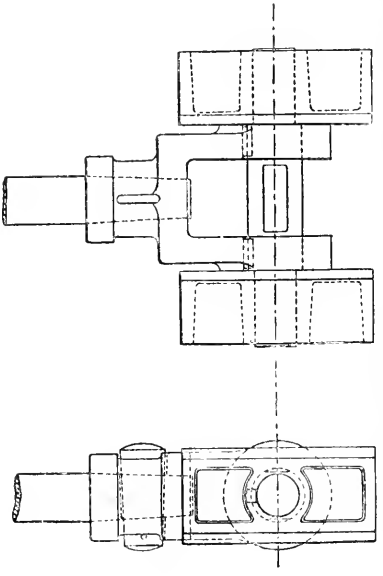

Fig. 303.

If the engines are made to rotate in the opposite direction, the conditions will be reversed, and the thrust T will be always upwards for both strokes of the piston, instead of downwards as before.

It should be noticed, also, that when the crank-pin drags the piston—as it does, for example, when steam is shut off while the engine continues to rotate—the direction of the thrust on the guides is reversed; hence the necessity for a top and bottom guide-bar under all circumstances.

The amount of thrust on the guide-bar, that is, the value of T in Fig. 301, varies according to the angularity θ of the connecting-rod, and to the position of the point of cut-off in the cylinder. The thrust is greatest when the crank is at right angles to the axis of the piston-rod, providing cut-off does not take place before half-stroke, and is reduced to nothing at each end of the stroke; hence the guide-bars wear hollow in the middle, and arrangements should be made for removing the guides and trueing them up.

It is usually important, in horizontal engines, that the engine should rotate in the direction in which the thrusts of the cross-head are taken upon the bottom guide-bar. This is especially so for the sake of efficient lubrication.

When engines are required to rotate in either direction equally,

the surfaces in contact between the block and the guide are made equally large; but when the engine is intended to rotate always in one direction, or nearly so, as in the marine engine, electric light

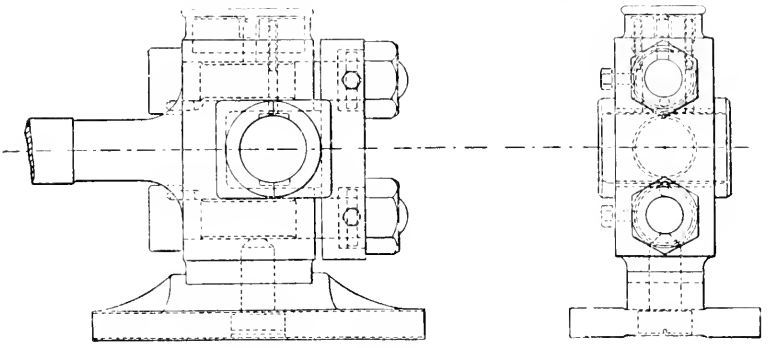

FIG. 304.

engines, and mill engines, the surface on which the thrust comes is made sufficiently large, while the opposite surface may be much reduced, as in the case with the slipper or shoe-guide (Fig. 304), the prevailing direction of the thrust being taken on the largest surface of the block.

It is necessary that the cross-head should overrun the guide a little

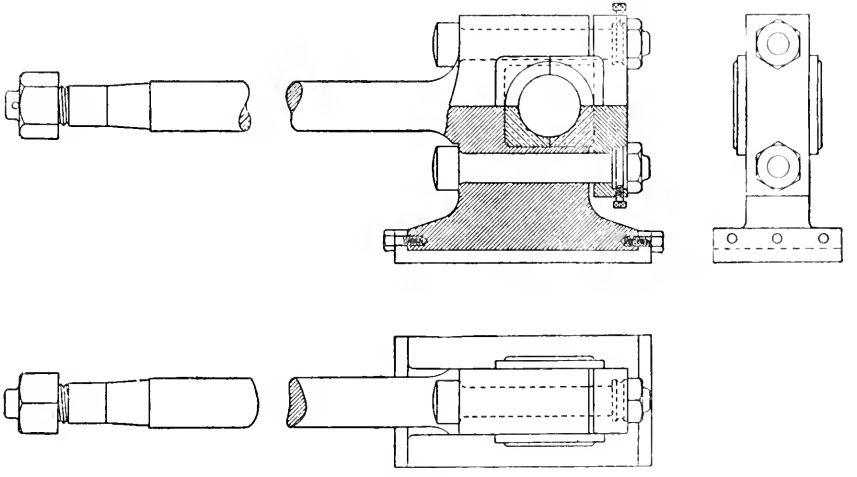

FIG. 305.

at the end of the stroke, so that no ridge may be formed by wear, which would cause trouble if any slight change were made in the length of the connecting-rod due to wear or adjustment of brasses.

Fig. 305 represents one of the most used types of cross-heads and slide-blocks, and one which is only being displaced by the necessity of differently constructed engine frames to meet the greater working stresses due to high steam-pressure and more rapid reciprocation of moving parts, rather than by any inherent defect in construction or performance. It is essentially the locomotive pattern of twenty years ago, and was exclusively used for large fixed engines. The surfaces in contact with the slide-bars can be increased, so as to have very low working pressures without unduly increasing the cross-head and gudgeon.

Figs. 304 and 305 are examples of what might be termed the marine type of cross-head, for it is universally used with the slide-bar attached to the back standard of marine engines. The head is forged solid with the piston-rod. The slipper is made adjustable, and can be packed out from the head; or the slide-bars can be packed up from the standards, and the top strips let down.

Fig. 306. This cross-head is used between channel slide-bars, and also in the Corliss type and with other trunk beds. Adjustment for

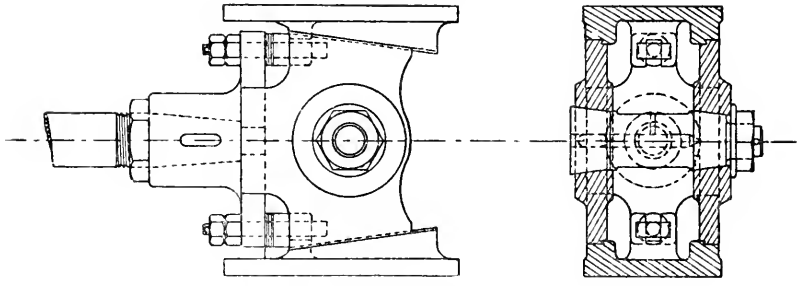

Fig. 306.

wear is obtained by taking out the liners and drawing the slippers up the inclined faces. The cross-head is usually made in cast steel, and the slippers are cast iron.

Fig. 307 is a good example of a light cross-head suitable for high-speed engines. The wearing surfaces of the cross-head are large in proportion to the diameter of the piston-rod. The gudgeon is fitted with an oil-box, which is drop-fed in vertical engines, and wiper-fed for horizontal engines. The gudgeon is cut away at each side so as to form a relief corresponding to the recess in the brasses, and to give the wearing surfaces an over-run, and so prevent the formation of a shoulder when the gudgeon wears.

The slippers are secured by studs, which are riveted on the wearing faces and suitably filed clear so as not to have contact with the slide-bars

The cone attachment of the gudgeon is a good feature, and makes a very solid arrangement. The split cone allows the gudgeon to be always held true, and any slack to be taken up truly.

The sides of the cross-head are prevented from closing under the

nip of the gudgeon nuts by projecting nipples on the slippers. The slippers can be adjusted by inserting sheet-brass when necessary.

The best designs of cross-heads have low pressures on the slipper face, and if kept below 40 lbs. per square inch, adjustments are almost an unnecessary complication.

The pressure on the guide surface should not exceed 100 lbs. per square inch as a maximum. The maximum pressure on the cross-head pin should not exceed 1200 lbs. per square inch of diameter × length.

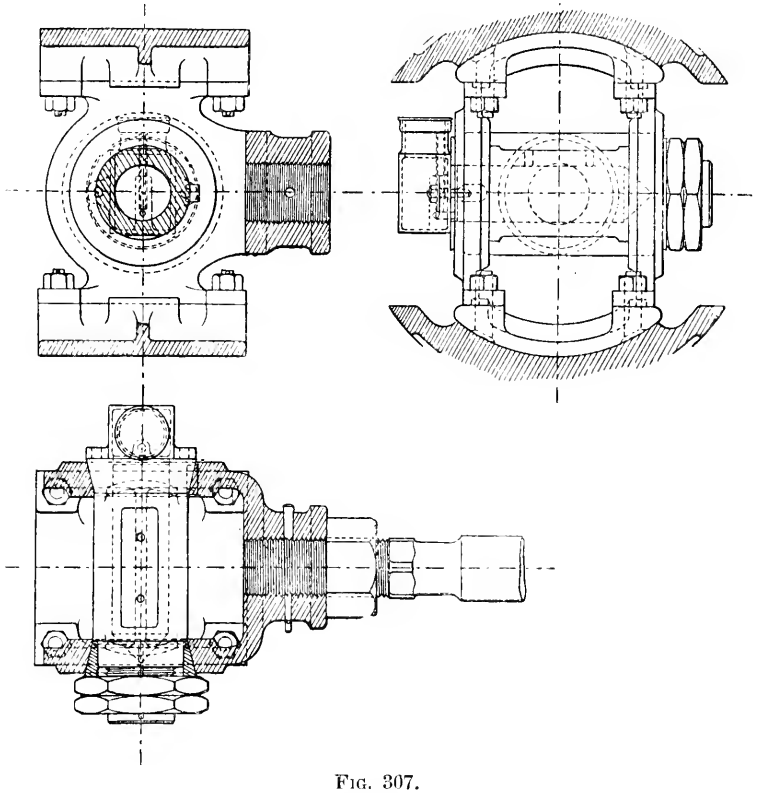

Fig. 307.

The Connecting-rod.—Figs. 308 to 311 show designs for a connecting-rod of the marine type. This design is also largely used for land engines, both horizontal and vertical.

The weight of this type of connecting-rod is less than that of other types suitable for the same size of crank-pin. It is especially suitable for high-speed engines, on account of the smaller amount of crank-balance required.

The interspace between the cap and body of the large end is

usually fitted with brass fillers, as shown at A, Fig. 310; the fillers are retained in place by small studs as shown, and they can be withdrawn when the rod-end requires adjustment by slacking out the main nuts and lifting the fillers off the studs without removing the studs. This saves taking down the whole of the large end, and effects a great saving of the time required to adjust the brasses.

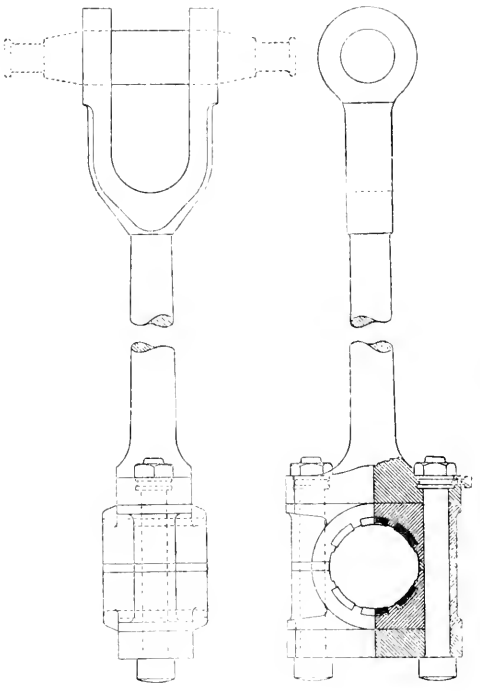

Fig. 308.

All brasses forming a semicircle tend to close upon the pin when heated, unless forcibly prevented. In this design the brasses are held in place by side screws and by the packing between the brasses.

In order to further minimize the risk of closure of brasses upon the pin, it is usual to cast or cut away recesses, as shown at *c*, Fig. 309. The surface need not be cut away through the whole length of the bearing, for the oil is retained better if the recess is stopped at each end about $\frac{1}{4}$ to $\frac{1}{2}$ in. from the beginning of the radius of the crank-pin junction with the crank-webs.

In large end connecting-rod brasses for 6-in. crank-pins and upwards, babbit metal strips are fitted in slotted recesses, as shown in Fig. 308. The surface of the babbit strips is usually left projecting $\frac{1}{32}$ in. above the surface of the brass. The bolts bear on each side of the brasses, and are usually relied upon to prevent the brasses from turning when the packing pieces are filed thin.

Fig. 312 shows a fork-ended connecting-rod with outside bearings for attachment to a solid cross-head. It was a type largely used some years ago on Lancashire mill engines, but is now largely displaced by more direct and less expensive forms of connecting-rods. The higher speeds and pressures of to-day necessitate the line of pressure between cylinder and crank-pin being maintained as nearly in a straight line as possible, hence the success of the single-piston rod-brass as against the double set of brasses of the forked connecting-

rod, with the flat beds and wide-spreading gudgeons of some years ago. In the latter type it is almost impossible to maintain the perfect alignment of the connecting-rod, and if the brasses on both sides are not adjusted exactly similarly, the work is liable to be done on one side of the fork only, in which case fracture at the root of the fork may occur.

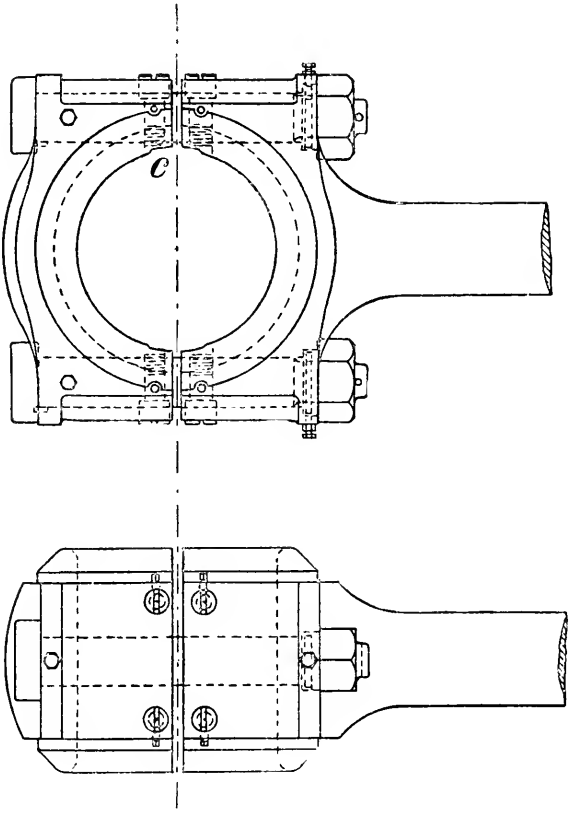

FIG. 309.

Fig. 313 is an example of the best type of forked connecting-rod end, and is used in conjunction with Fig. 311. Great care must be exercised in forging this type of rod end, so that the grain of the iron follows the jaw. If the grain crosses the forked part of the rod end, flaws are often developed, and in view of this it is well to allow a little greater factor of safety at these points.

Fig. 314 shows a connecting-rod suitable for 10″ × 10″ × 16″ double-cylinder portable engine. The large end is a simple form of strap

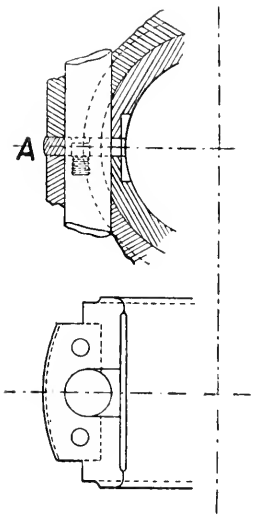

FIG. 310.

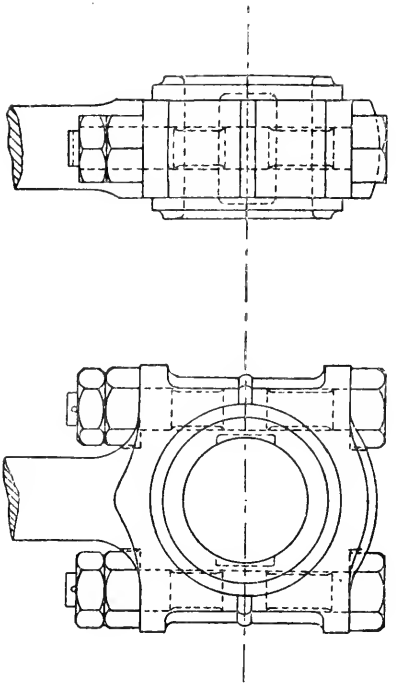

FIG. 311.

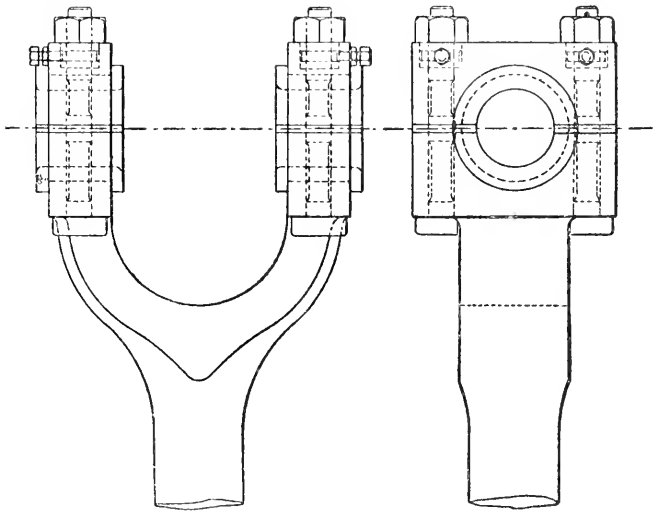

FIG. 312.

type connecting-rod. The taper cotter is used for adjustment in conjunction with an equal-taper gib, which holds the end of the strap and prevents it from opening.

The gib and cotter together form a parallel couple, and in adjustment maintain the alignment of the connecting-rod. Two gibs are sometimes used, one on each side of the cotter, the taper on the cotter in this case being halved, and the gibs being made with the same taper. For very high speeds the strap type is not so good as the marine type, for it has a tendency to bend under the throw of the connecting-rod, and, so opening out, to leave the brasses a slack fit. When the strap type is used the strap must be made extra strong, as in the locomotive connecting-rod, Fig. 315. The small end of the connecting-rod is solid, and suitable for trunk guides.

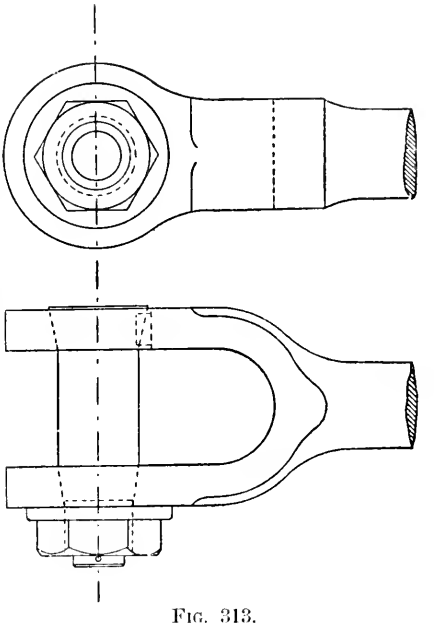

Fig. 313.

The adjustment is by a fine-threaded

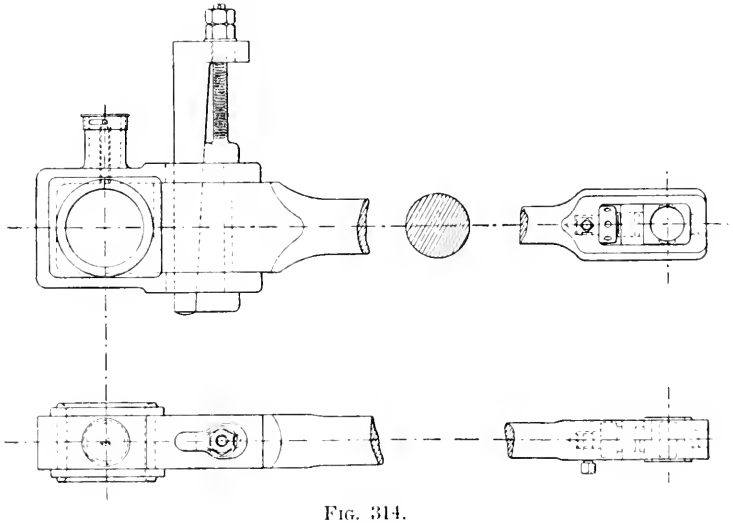

Fig. 314.

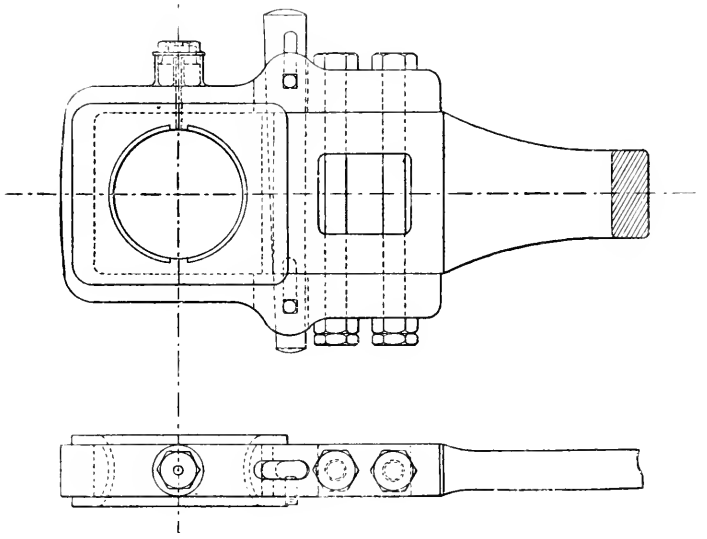

FIG. 315.

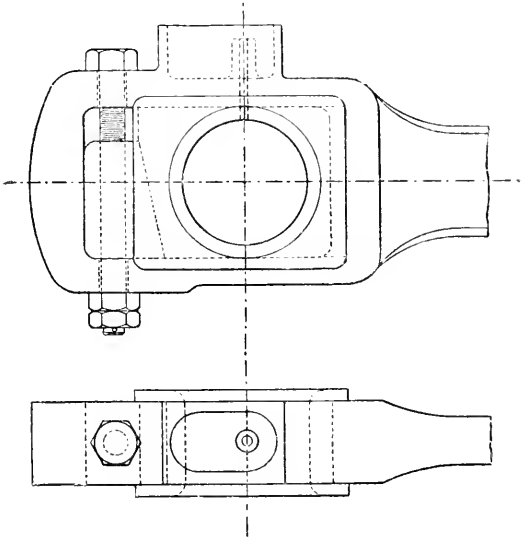

FIG. 316.

screw, and is satisfactory for small engines, but not suitable for very great pressures, owing to the small area of the thread on the screw. The thread must be a fine vee thread, to prevent slacking out under the repeated loadings.

The brasses in all these examples are shown close-fitting at the joint, or, as it is usually termed, metal to metal.

In cheaper classes of machinery it is usual to machine the brasses solid, and when they are fitted, to part them with a narrow tool, and fill the space with wood or leather strips.

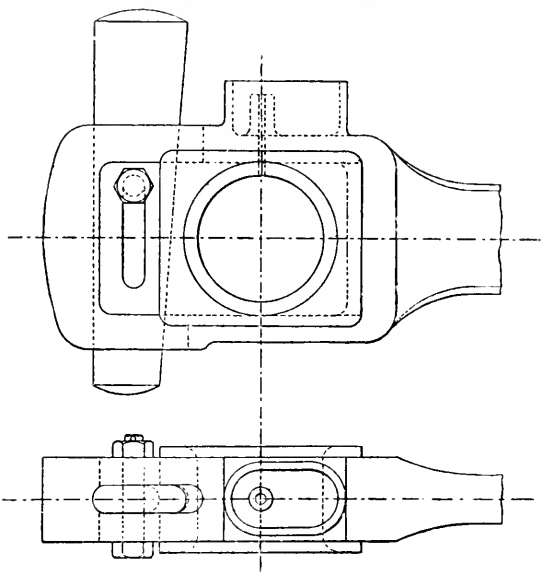

Fig. 317.

Fig. 315 shows a locomotive connecting-rod end of the strap type. It will be noticed that the end is proportionately much stronger than the preceding example, and is the outcome of locomotive experience in actual working. The surfaces of the brass are recessed, and the recesses are filled with babbit metal. The inner surface of the bearing is radiused to suit the crank-pin, which is made of a gradually reducing section to avoid sudden changes of section.

Figs. 316, 317, and 318 show designs for the large end of a connecting-rod suitable for engines having overhung crank-pins, as in the disc type.

The adjustment can be placed at the inner or outer end of the brass, so as to give adjustment in either direction. All connecting-rods should be designed so that the large and small end adjustments act in the same direction, and thus practically maintain the centres of the crank-pin and gudgeon at a constant distance. When the cylinder clearances are cut down to $\frac{1}{8}$ in. or $\frac{3}{16}$ in., the length of connecting-rod must remain approximately constant. When connecting-rods (Figs. 316, 317, and 318) are used, the crank-pin is fitted with a loose cap, having a nipple going into the recess in crank, and held in place by studs and nuts. The connecting-rod end is put together complete and passed sideways into the crank-pin, and the cap then put on the end of the pin.

A great advantage is obtained in having the connecting-rod made

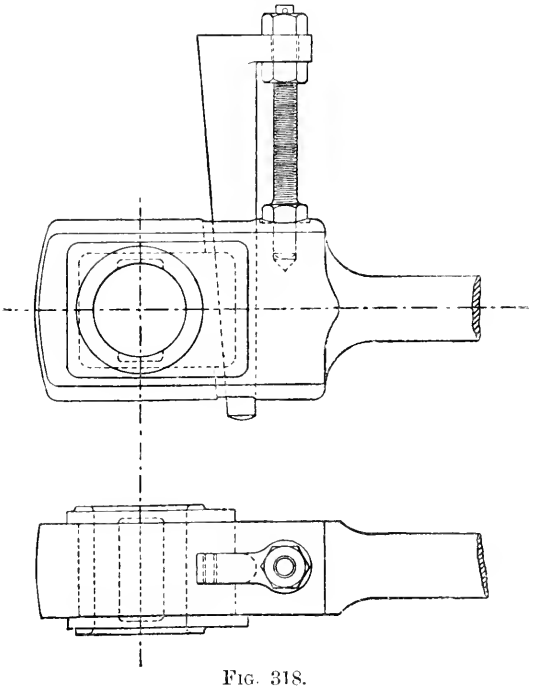

FIG. 318.

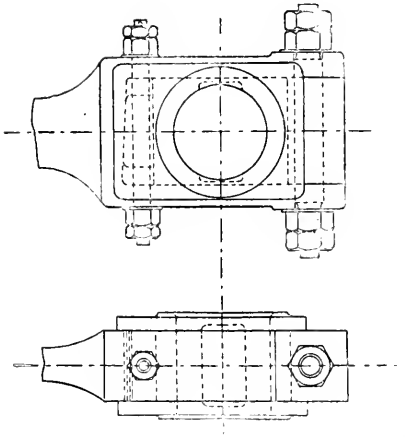

FIG. 319.

all in one piece, without loose attachments, such as caps, straps, etc., for should the adjusting pieces slack back or fly out, the connecting-rod cannot get adrift entirely.

Fig. 319 gives a design of a large end for the connecting-rod used on the inside crank of the Webb Compound locomotive, and competes closely with the marine type connecting-rod end for general adaptability and lightness.

Fig. 320 is the large end of the connecting-rod for Sisson's high-speed double-acting engine, showing a spring self-adjustment, keeping the brasses always up to their work, and enabling the rod to yield in cases of accidental heating.

Main Bearings.—The main bearings carry the crank-shaft, and

through them the stresses due to the steam-pressures on the piston are transmitted to the engine framing.

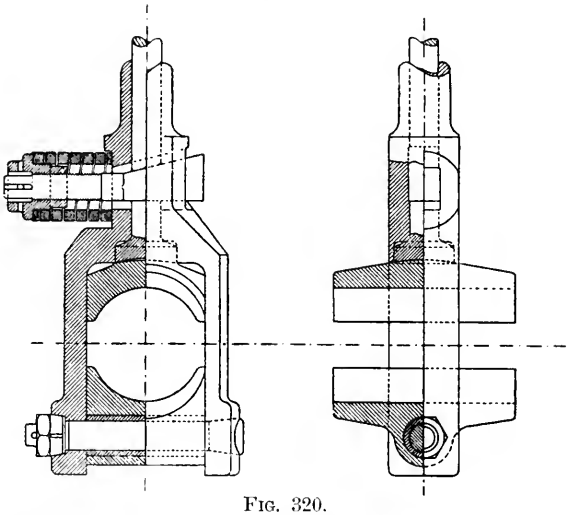

FIG. 320.

It is important that the main bearings should be set so as to maintain the true alignment of the crank-shaft, and they must be so fitted that when wear occurs the brasses may be readily removed and adjusted to prevent distortion of the shaft.

For large main bearings, such as are used in marine work, the bottom brass of the main bearing is preferably made concentric with the shaft, so that it may be revolved round the shaft and removed without taking out the crank-shaft.

To prevent heating of bearings, it is important that the bearing surface should be sufficient to prevent undue load, p, per square inch of bearing surface, reckoned normal to the load, namely, = diameter of journal $\times$ length of bearing. The pressure on main bearings varies from 600 lbs. per square inch for slow engines, to 400 lbs. for quick-revolution engines (Unwin).

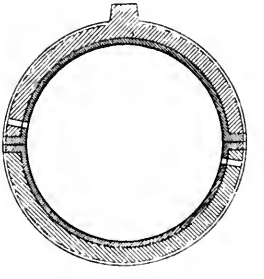

FIG. 321.

The nature of the material of the bearing has much to do with its satisfactory working. The "brasses" should be made of a metal which will easily stand a pressure per square inch greater than that likely to be brought upon the bearing; at the same time it should be a comparatively soft metal, so as to reduce the possibility of injury to the shaft by heating and seizing of the shaft and bearing.

According to experiments made by Mr. J. Dewrance, he concludes

that "the oil should be introduced into a bearing at the point that has to support the least load, and an escape should not be provided for it at the part that has to bear the greatest load."

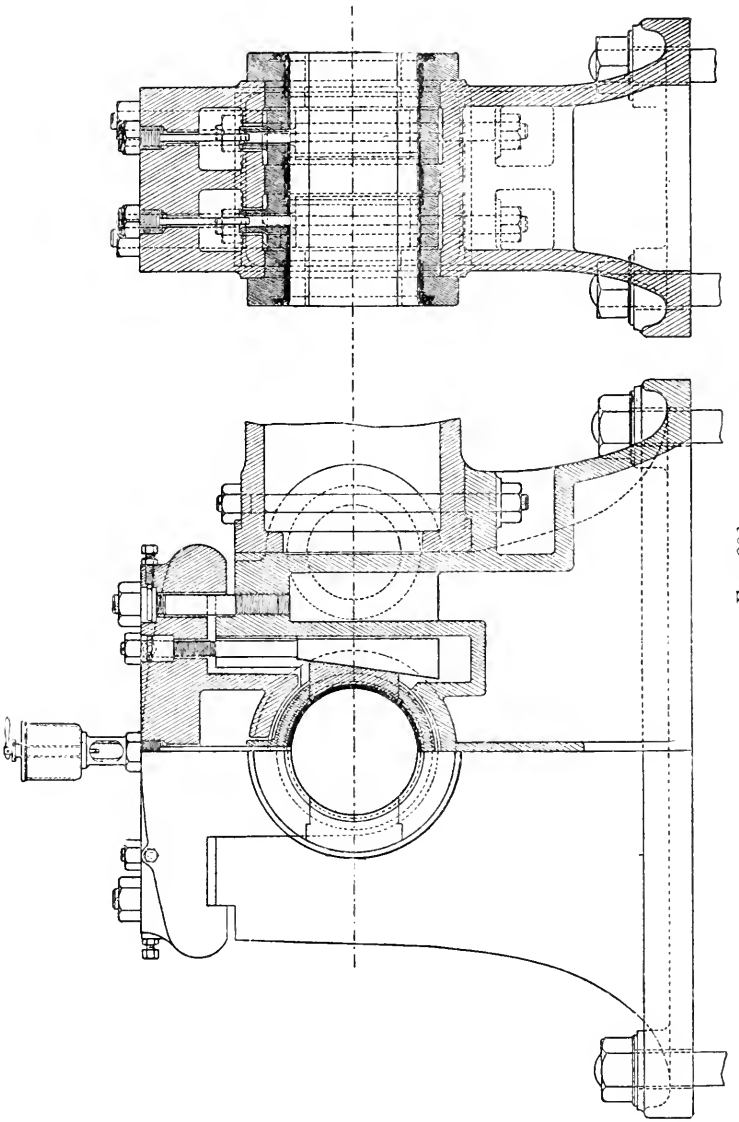

FIG. 322.

"The proper point to introduce the oil is just above the joint of

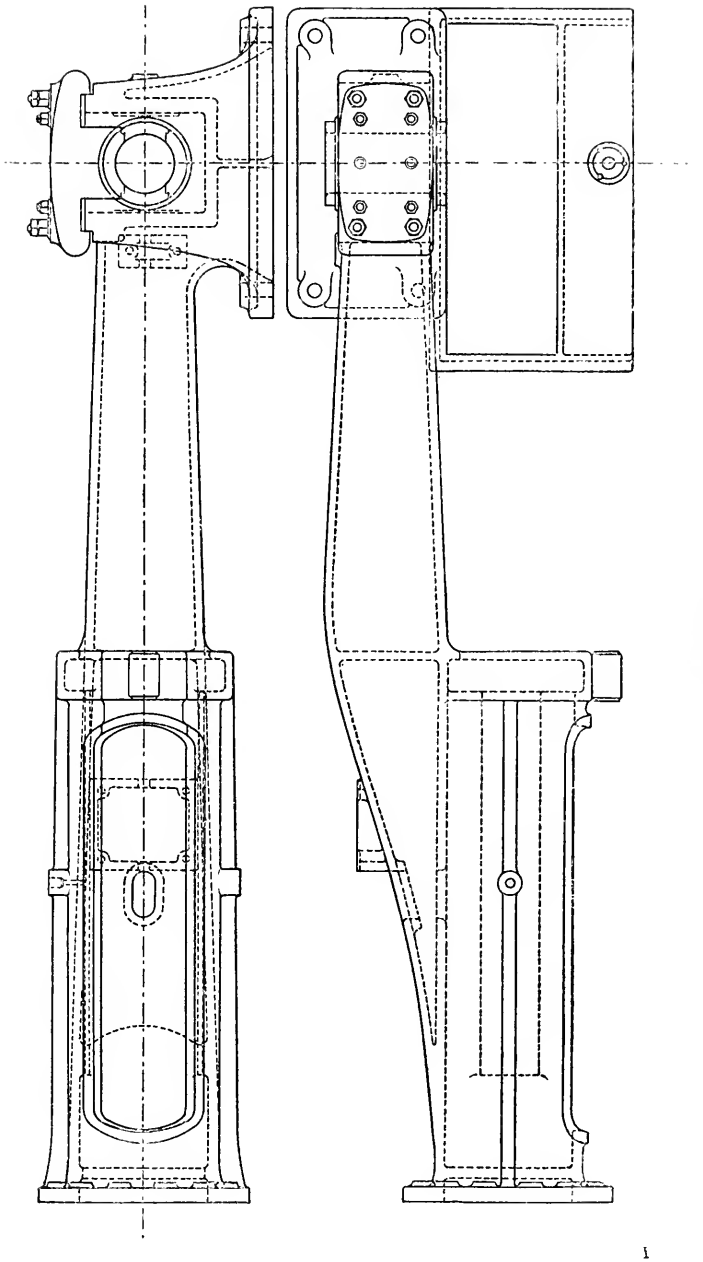

Fig. 323.

the bearing at the side (Fig. 321). There the oil is distributed over the shaft and carried to the point of greatest pressure. . . . It is desirable that each half-bearing should have its own supply of oil."[1]

Fig. 322 is a good example of a main bearing as used on high-class fixed engines.

The main frame of the engine can be cast solid with, or jointed to, the main bearing as shown. The bearing is fitted with Babbit metal in suitable recesses, care being taken that no part of the cast-iron shell is in contact with the shaft.

The bearing is in four parts, and is fitted with two wedges at each side, which permits of a ready adjustment of the bearing after wear.

The cap is clipped over the upstanding jaws of the main pedestal, and when bolted down it makes practically a solid eye, in which the main bearing is gripped.

The bearing is lubricated by sight-feed lubricators. In large bearings the cap is usually cored out so as to form a tallow-box, and the lubricators are attached to a cover, which can be easily removed if desired to inspect the bearing while the engine is in motion.

Engine Frames (Fig. 323).—In designing the frame of an engine, care is taken to distribute the material so as best to deal with the stresses transmitted from the piston to the crank-pin.

Formerly in horizontal engines the cylinder-guides and main bearings were bolted separately on the bed, which was itself out of the line of stress, and was subject to a bending action at each stroke of the engine. The modern engine frame is designed with more regard to the work it has to do, taking the stresses as direct as possible and more nearly in the centre line of the frame. Figs. 323, 324 are details of the engine-bed for a horizontal mill engine.

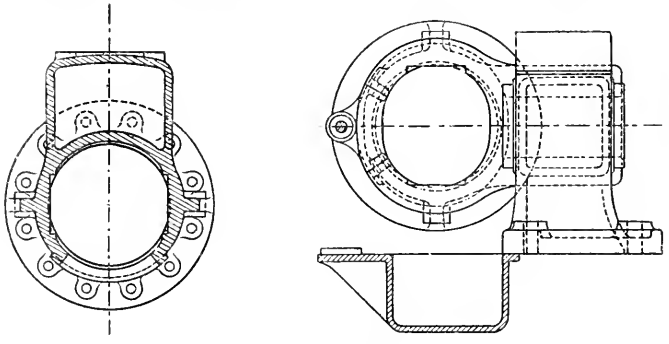

Fig. 324.

In vertical engines, especially for the navy, the dimensions and weight of the engine framing have been greatly reduced compared with the older class of engines (see the chapter on "The Marine Engine"). This has been possible by the introduction of a high quality of steel and steel castings in the place of wrought iron and cast iron.

[1] *Proceedings Inst. C.E.*, vol. cxxv. p. 359

CHAPTER XVIII.

FRICTION OF ENGINES.

If an indicator diagram be taken when there is no load on the engine, an attenuated diagram will be obtained, enclosing a work-area representing the work required to drive the engine itself against its own friction.

From experiments made by Dr. Thurston, it was shown that, under usual conditions, and at all ordinary speeds and steam-pressures, the friction of the engine remains practically constant, and that the friction-card of the engine when unloaded represents also the friction of the engine when fully loaded.

These conclusions have been frequently confirmed, and the following diagram giving the results of trials of a compound Willans engine illustrates the same fact, namely, that there is practically a constant or a nearly constant difference at all loads between the I.H.P. and the B.H.P. of an engine.

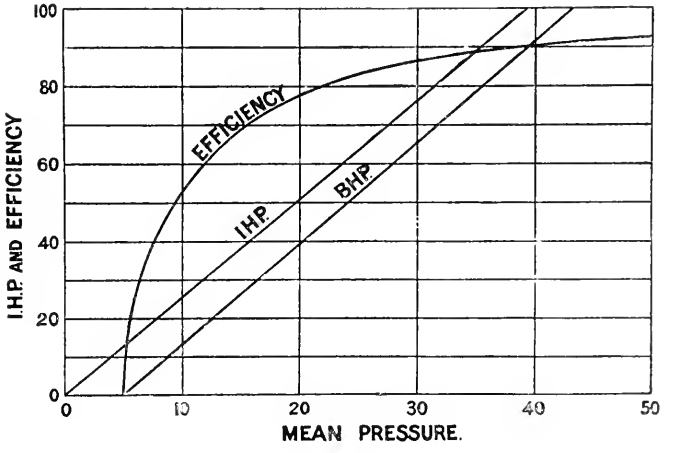

Fig. 325.

The *mechanical-efficiency* curve is drawn for any engine by taking the value of B.H.P. ÷ I.H.P. for various mean pressures, and setting

up the value of the fraction to a vertical scale of percentage. By joining the points thus found the curve is obtained.

From Fig. 325, we see that at a mean pressure of 9 lbs. per square inch (referred to the L.P. piston) the efficiency was only 50 per cent., while at 50 lbs. mean pressure the efficiency was 93 per cent.

It will thus be evident that, so far as the mechanical efficiency is concerned, an engine should be worked up to its full load to obtain the maximum efficiency. The friction of an engine does, no doubt, to some extent increase with the load, but the proportional increase is so small as practically not to affect the result. The above remarks assume perfect efficiency of lubrication.

Dr. Thurston gives the following values for the relative distribution of the friction in an engine with a balanced slide-valve: Main bearings, 47·0 per cent.; piston and rod, 32·9; crank-pin 6·8; cross-head and wrist-pin, 5·4; valve and rod, 2·5; and eccentric-strap, 5·3 per cent.

The frictional resistance of engines in general varies from about 8 per cent. to 20 per cent. of the full power.

Mr. M. Longridge estimates that the total internal frictional resistance in driving the engine itself unloaded is equal to a pressure varying from 2 lbs. to $3\frac{1}{4}$ lbs. per square inch of low-pressure-piston area.

CHAPTER XIX.

BALANCING THE ENGINE.

SINCE the introduction of high rotational speeds, the question of the balancing of engines to prevent vibration has been much considered.

If the moving parts of an engine could be perfectly balanced, then the engine, if suspended, could be made to rotate in mid-air without any motion due to inertia of the moving parts. But ordinary engines are far from being perfectly balanced, and the inertia of the moving parts of high-speed engines causes large and rapidly varying stresses in the frame and foundation of the engine.

By the application, however, of properly placed and properly proportioned balance-weights, combined with care in the general design, much can be done to reduce vibration to a minimum.

Effect of Inertia of Reciprocating Parts.—Considering first the effects on vibration of the inertia of the reciprocating parts.

In Fig. 326, suppose the piston to be at the end A of the stroke, and the crank to be on the dead centre ; then if steam be admitted,

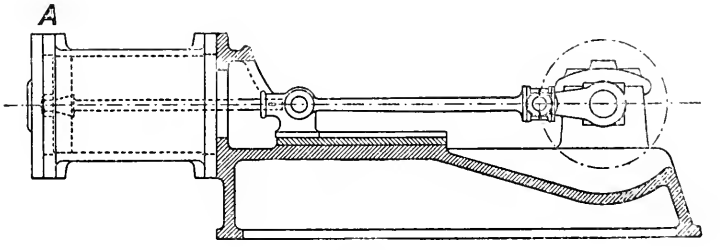

FIG. 326.

and the total force on the piston is equal to 4000 lbs., this force acts pressing on the cylinder-cover and piston equally. There is then a stress of 4000 lbs. acting in the bed-plate, the pressure on the cover pressing the engine to the left, and the pressure on the piston pressing the engine to the right, acting through the crank on the main bearing. The forces are equal and opposite, and cause a stress in the engine, but do not tend to move it upon its foundation.

But when the piston moves, part of the steam-pressure acting on the piston will be absorbed (as we have previously seen) in accelerating the piston and the other reciprocating parts, and will not be felt on the crank-pin. Suppose that the amount of such pressure absorbed is 500 lbs.; then we have 4000 lbs. acting on the cylinder-cover, pressing the engine in one direction, and 4000 − 500 = 3500 lbs. pressing against the crank-pin in the opposite direction, making a net stress in the bed-plate of 3500 lbs., and a further pressure of 500 lbs. tending to press the engine to the left.

The difference between the pressure on the cylinder-cover in one direction, and the pressure on the crank-pin in the opposite direction, gradually diminishes up to about half-stroke—depending on the length of the connecting-rod—where it becomes zero, and beyond this point the force is in the opposite sense, owing to retardation of the reciprocating parts; and the tendency now is to push the engine to the right, owing to excess of pressure on the crank, the difference gradually increasing to the end of the stroke.

On the return stroke the excess of pressure on the bed owing to the acceleration of the piston is still towards the right, and remains so, though to a gradually decreasing extent, to mid-stroke, when the force again changes in sense, gradually increasing to a maximum to end of stroke. These effects are clearly shown by the diagrams which follow.

The effect of *compression* or cushioning of the steam in the cylinder during the retardation of the reciprocating parts is to remove the retarding force (acting as driving force) from the crank-pin and transfer it to the cylinder, where we now have, however, the same net result on the engine frame, only the stress is applied to the cylinder-cover instead of to the crank-pin. In this way the stress due to retardation is removed from the crank-pin at a time when the force so acting is not acting as turning effect, and the work of retardation is stored up instead in the compressed steam ready to act on the piston during the return stroke.

Effect of Unbalanced Rotating Parts.—A further cause of tendency to rocking of the engine and vibration of the foundations is the centrifugal force of the rotating parts acting at the main bearings, consisting of the unbalanced portions of the crank-shaft itself, and including a portion of the weight of the connecting-rod.

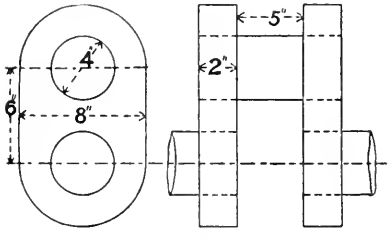

FIG 327.

Dealing first with the crank-shaft itself, the extent of the centrifugal force $= \frac{W}{g}\omega^2 r$, where r = radius in feet of centre of gravity of unbalanced parts about axis of rotation, ω = velocity in radians per second.

To take an actual example, Fig. 327 is a sketch of a small crank.

Weight of one arm, including holes as solid $= \{(8^2 \times 0{\cdot}78) + (6 \times 8)\} 2 \times 0{\cdot}28$ lbs.
$= 55$ lbs.
Weight of two arms $= 110$ lbs.
Weight of pin enclosed by end of connecting-rod $= (4^2 \times 0{\cdot}78 \times 5) \times 0{\cdot}28$ lbs.
$= 17{\cdot}6$ lbs.

To find centre of gravity x of unbalanced portion of crank (Fig. 328)—

$$(110 \times 3) + (17{\cdot}6 \times 6) = 127{\cdot}6 \times x$$
$$x = 3{\cdot}4 \text{ inches}$$

Referring this to the crank-pin, that is, finding the equivalent weight (x) acting at a radius of rotation equal to that of the crank-pin—

$$127{\cdot}6 \times 3{\cdot}4 = x \times 6$$
$$x = 72{\cdot}3 \text{ lbs.}$$

The centrifugal force F acting on engine bed at three hundred revolutions

$$= \frac{72{\cdot}3}{32} \omega^2 r$$
$$= \frac{72{\cdot}3}{32} \times \left(2\pi \frac{N}{60}\right)^2 \times \tfrac{6}{12}$$
$$= 1114 \text{ lbs.}$$

Secondly, if a portion of the mass of the connecting-rod be considered as concentrated at the centre of the crank-pin, then the total centrifugal force is increased in direct proportion to the increase of mass.

The forces producing the effects above referred to may be approximately balanced, so far as concerns the stresses parallel to the line of stroke, by addition of rotating counterbalancing masses, so arranged that the forces set up by them during rotation are together equal and opposite in their effects to the forces they are intended to balance.

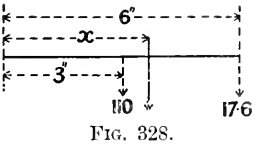

Fig. 328.

The balance cannot be obtained by means of a single mass, because it could not be placed directly opposite the centre of the crank-pin, and if the balancing mass is not in the plane of the force to be balanced, an unbalanced couple is produced which itself sets up vibration on a plane at right angles to that of the original force.

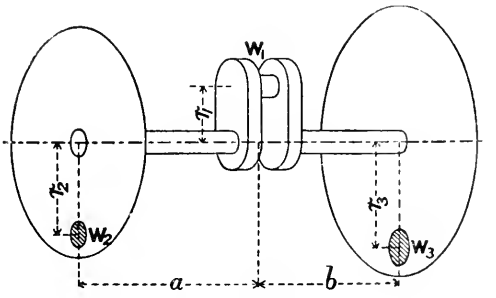

Fig. 329.

This difficulty is overcome by dividing the balancing mass and distributing it on each side of the crank in accordance with the following principles :—

The extent to which balancing masses should be added depends upon circumstances, to be more fully considered presently ; but suppose it is decided to balance the mass W_1, which is equivalent to the following masses, all supposed to be concentrated at the crank-pin and to rotate at the crank radius, namely, unbalanced part of crank-webs + crank-pin + a proportion (say 80 per cent.) of the mass of the connecting-rod + half mass of reciprocating parts.

Let balancing masses W_2 and W_3 be placed on the wheel rims, opposite the crank, so that—

$$W_1 r_1 = W_2 r_2 + W_3 r_3$$

This secures a balance of the centrifugal forces ; also—

$$W_2 r_2 \times a = W_3 r_3 \times b$$

This prevents the formation of a couple tending to turn the engine about an axis in a plane at right angles to the engine-shaft.

For the case of a two crank-engine, as a locomotive (Fig. 330), the same principles are applied. Thus, let W′ and W″ (Fig. 331) represent the mass at the respective crank-pins requiring to be balanced. Then, taking each crank separately, the two balancing masses w_2 and w_3 are placed in the wheels so that $W' r' = w_2 r_2 + w_3 r_3$, also so that $w_2 r_2 a = w_3 r_3 b$.

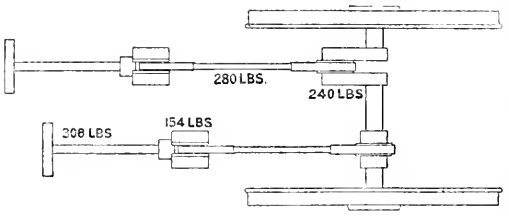

FIG. 330.

It will be seen from the last equation that the heaviest balancing mass is placed in the wheel nearest to the crank to be balanced.

Similarly, balancing masses w_4 and w_5 will be placed one in each wheel respectively, and opposite to the mass W″, and these weights are proportioned as already explained. Thus in each wheel there are two balancing masses, the heavier belonging to the near crank, and the lighter to the far crank.

Instead of having two separate masses in one wheel, a single resultant mass may be substituted. Thus, suppose that in an actual example the large mass required is 252 lbs., and the small mass 92 lbs., then the resultant mass is found graphically as shown in Fig. 332, both in magnitude and direction, and—

$$R^2 = (252)^2 + (92)^2$$
$$R = 268 \text{ lbs.}$$

As a design which reduces the necessity for counterbalancing masses in the wheels of the locomotive, may be mentioned that for

the Glasgow and South-Eastern Railway by Mr. Manson, which

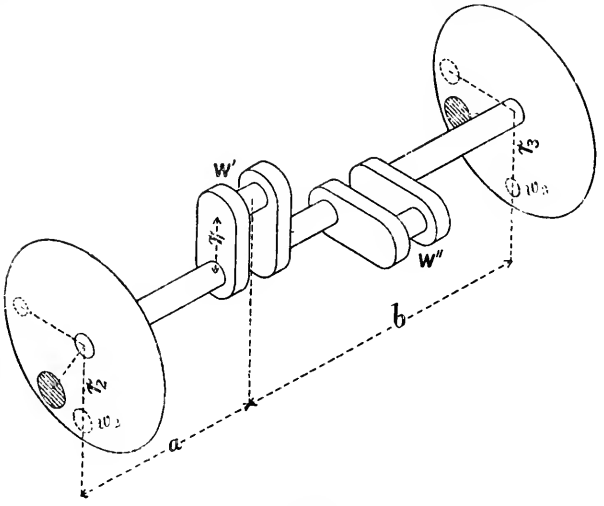

FIG. 331.

consists of four high-pressure cylinders all working on one axle. Two placed inside under the smoke-box, driving on the cranked axle, and two outside, driving on crank-pins on the driving-wheels. On each side the outside crank is opposite the inside crank, so that the reciprocating masses balance each other (except for the effect of the shortness of the connecting-rod).

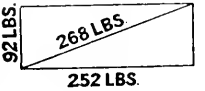

FIG. 332.

Diagrams of Unbalanced Forces for a Single-crank Engine.[1]—The following diagrams illustrate the means of representing by a curve the direction and magnitude of the forces acting on the engine-bed of a single-crank engine.

1. The centrifugal force due to the rotation of the unbalanced portion of the crank-shaft :—

Draw a circle from centre A with radius AB (Fig. 333), the length of AB representing to scale the centrifugal force due to the unbalanced portion of the crank-shaft itself $= \frac{W}{g}\omega^2 r$, where W = weight of unbalanced portion of crank-shaft referred to crank-pin, and r = radius of crank-pin path in feet.

Taking the same values for W and r as are given for Fig. 327, then—

$$\text{Length of AB} = \frac{W}{g}\omega^2 r$$
$$= \frac{72{\cdot}3}{32} \times \frac{(2\pi \times 300)^2}{(60)^2} \times \tfrac{1}{2}$$
$$= 1114$$

[1] See also "Graphic Methods of Engine Design," by A. H. Barker.

This length is then measured from the scale shown by the side of the figure, and the circle through B is drawn. The numbers marked on this circle represent the several positions of the crank-pin during its rotation about centre A. It is important that these figures should be marked on the drawing, in order to follow the operation clearly.

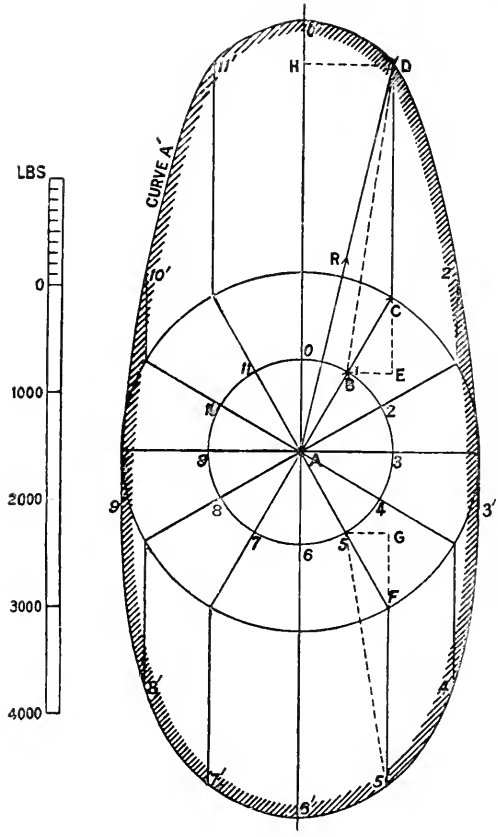

FIG. 333.

2. The force required to accelerate the connecting-rod may be estimated by a separate construction; but it is convenient in practice to consider part of the connecting-rod as concentrated at the crank-pin, causing a proportional increase of centrifugal force in the crank, and part at the cross-head, as addition to the mass of the reciprocating parts. The proportional distribution of the weight of the connecting-rod is determined by finding the centre of gravity, G, of the rod, as at Fig. 334, and dividing the mass so that $M\frac{GP}{BP}$ is centred at the crank-pin, and $M\frac{BG}{BP}$ at the cross-head.[1]

In accordance with this method, a distance BC, Fig. 333, is set off from B equal to the centrifugal force of the added weight $= \frac{W}{g}\omega^2 r$, where $W = \frac{GP}{BP}$ of the mass of the connecting-rod, and r = the crank-pin radius in feet.

Thus, for the engine under consideration the mass of the connecting-rod = 80 lbs., and (Fig. 334) if $\frac{GP}{BP} = 0{\cdot}8$, then $80 \times 0{\cdot}8 = 64$ lbs.; also, since N = 300 revolutions per minute—

[1] Effects of gravity are neglected.

$$\frac{W}{g}\omega^2 r = \frac{64}{32} \times \left(2\pi\frac{N}{60}\right)^2 \times \tfrac{1}{2} = 986$$
$$= \text{length of BC to scale}$$

and the circle of radius AC (Fig. 333) is drawn representing the total constant centrifugal force acting through the crank and in the direction of the crank on the main bearing.

3. The force required to accelerate the reciprocating parts of the engine is represented for crank position AB (Fig. 333) by the vertical line CD, and the vertical lines throughout the figure beyond the circle through C represent this force for the various crank-pin positions during a complete revolution, being a maximum at crank positions 0 and 6, and zero at or near crank positions 3 and 9 depending on the length of the connecting-rod.

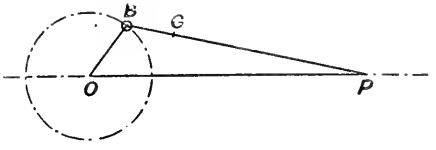

FIG. 334.

To obtain the value of this force CD for any position AB of the crank, the construction due to Klein, and published in the *Journal of the Franklin Institute*, vol. 132, September, 1891, is very convenient. Thus, if OC (Fig. 335) = the position of the crank, and CP = that of the connecting-rod, then, if OC represents to scale the radial acceleration of the crank-pin $C = \omega^2 r$, the acceleration of the reciprocating mass at P is obtained by the following construction: Produce PC to meet the perpendicular through O in N; draw a circle on PC as diameter; with centre C and CN as radius, draw a circle to cut the circle on PC in BB, and produce if necessary the line BB to cut OP in E. Then OE represents the acceleration of P to the same scale as OC represents the radial acceleration of C. To find the length of CD, Fig. 333, by the scale of force for position AB of the crank—

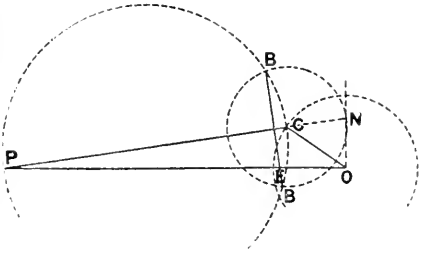

FIG. 335.

Let mass of reciprocating parts, including 20 per cent. of connecting-rod } = 136 lbs.

$$\text{Force to accelerate reciprocating parts} = \frac{W}{g}\left(2\pi\frac{N}{60}\right)^2 r \times \frac{OE}{OC}$$
$$= 2218 \text{ lbs.}$$
$$= \text{CD (Fig. 333)}$$

In the same way this force may be calculated for all points of the crank-pin path, taking in each case the respective values for

OE ÷ OC obtained by Klein's method. In Fig. 336 the diagram is drawn for another position of the crank. The reference letters

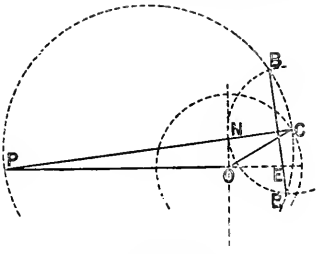

Fig. 336.

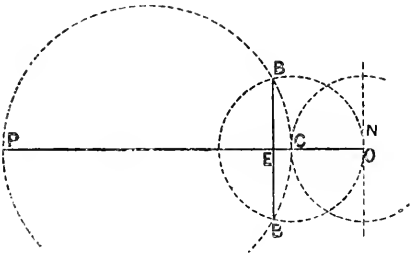

Fig. 337.

are common to both figures. When the crank is on the dead centre, the construction becomes as shown in Fig. 337.

If the respective values of OE at various positions of the piston stroke are set off above and below a horizontal base, as at OE′ (Fig. 338), then a curve AB of acceleration of reciprocating parts is obtained, which is the same as that already described on p. 242.

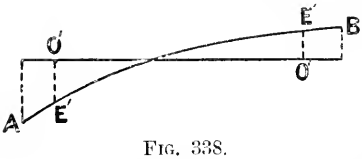

Fig. 338.

An algebraic expression which is very nearly exact for the force accelerating the piston is—

$$\frac{W}{g}\omega^2 r\left(\cos\theta + \frac{1}{n}\cos 2\theta\right)$$

in which n is the ratio of the length of the connecting-rod to the crank radius, and θ is the angle turned through by the crank-shaft measured from the inner dead centre.

Applying this formula to find the length CD (Fig. 333) when the crank is at 30°—

$$\begin{aligned}\text{Acceleration at } 30^\circ &= \left(\cos 30^\circ + \frac{1}{n}\cos 60^\circ\right)\omega^2 r\\ &= \left\{\frac{\sqrt{3}}{2} + \left(\tfrac{2}{5}\times\tfrac{1}{2}\right)\right\}\omega^2 r\\ &= 0{\cdot}977\omega^2 r\\ \text{Then CD} &= \frac{W}{g}\omega^2 r \times 0{\cdot}977\end{aligned}$$

Prof. Dunkerley gives[1] the following useful geometrical construction exemplifying this formula :—

Let the outer circle (Fig. 339 be drawn to scale, with radius AB $= r$, and let this represent to a force scale $\frac{W}{g}\omega^2 r$, where W = weight

[1] *Engineering*, June 2, 1899.

of the reciprocating parts. Draw two small circles touching at the centre A, having their diameters along the line of stroke, and so that their radius $AE = \frac{1}{n}$ times the crank radius.

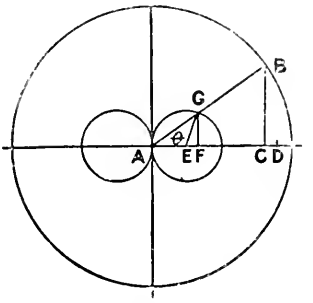

Fig. 339.

Then angle GEF = 2(angle GAE)
$= 2\theta$
and CD is made = EF

$$r\left(\cos\theta + \frac{1}{n}\cos 2\theta\right) = AC + EF = AD$$

that is, the force of acceleration of the reciprocating parts for any crank position

$$B = \frac{W}{g}\omega^2 r \times \frac{AD}{AB} = AD$$ to the force scale.

Mr. J. W. Kershaw gives the following convenient geometrical construction for obtaining six points in the curve (Fig. 340):—

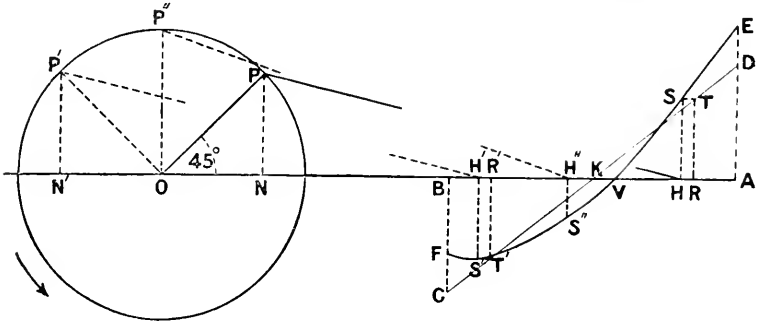

Fig. 340.

The inertia line CD is first drawn in the usual way for the infinitely long connecting-rod, making $AD = BC = \frac{W}{g}\omega^2 r$.

Points E and F in the curve are obtained by making $DE = CF = \frac{1}{n}AD$, where n = ratio of connecting-rod to crank radius = 3 : 1 in this case.

To find two more points, namely, for positions 45° and 135° of the crank: first find the piston position R for crank at 45° with an infinite connecting-rod—that is, make KR = ON; then find true position H of piston with short connecting-rod—that is, make PH = OK. But force due to inertia at R for infinite connecting-rod is known, and is equal to RT. Draw a perpendicular from H, and make HS = RT; then S is a point in the curve. The same construction is followed to find S′.

Point S″ is obtained by drawing crank position OP″ at 90°, and

finding corresponding piston position H″ for short connecting-rod; then draw H″S″ perpendicular to AB, making H″S″ = ED.

The point V is obtained as in Fig. 283.

Then the six points E, S, V, S″, S′, F are found, and a free curve is drawn through them.

Then for any crank position P′, P″, P, etc., the force due to inertia is obtained by measuring the height HS for the corresponding piston position H, and finding the value of $\frac{W}{g}\omega^2 r \times \frac{HS}{AD}$.

The proof of this construction for the positions of points S, S″, S′ respectively is as follows: Using for the force F due to inertia for any angle θ of the crank the formula $F = \frac{W}{g}\omega^2 r\left(\cos\theta + \frac{1}{n}\cos 2\theta\right)$, then for 45°, since $\cos 2\theta = \cos 90° = 0$, the last term disappears, and F is now $= \frac{W}{g}\omega^2 r \cos\theta$, which is the same as for the infinitely long connecting-rod; therefore HS = RT. Similarly, H′S′ = R′T′ at 135°.

When $\theta = 90°$, as for crank position OP″, then—

$$F = \frac{W}{g}\omega^2 r\left(\cos 90° + \frac{1}{n}\cos 180°\right)$$
$$= \frac{W}{g}\omega^2 r\left(0 - \frac{1}{n}\right)$$

because $\cos 90° = 0$; and $\cos 180° = -1$. Therefore for crank position 90°—

$$F = \frac{W}{g}\omega^2 r\left(-\frac{1}{n}\right) = FC = DE = H''S''$$

Having obtained, by any of the above methods, the value of the forces for the several points in the crank-pin path, and the direction and magnitude of the resultant at each point, then by joining the extremities of the resultants, as at 1′, 2′, 3′, etc., Fig. 333, we obtain the full curve A′.

This curve shows very clearly what are the magnitude and direction of the resultant forces acting throughout the revolution; thus, supposing the engine to be vertical, and the crank to be turning clockwise about centre A, then the vertical components acting upwards upon the engine-bed are seen to be a maximum when the piston is at the top of the stroke, gradually decreasing to zero at about mid-stroke, and again gradually increasing in a downward direction towards the bottom of the stroke. On the return of the piston from bottom to top of the stroke, the vertical forces still continue in the same downward direction, gradually decreasing to zero at about mid-stroke, after which they change direction and again become a maximum in the upward direction at the top of the stroke.

The gradual way in which these changes take place is shown by the smoothness of the contour of the curve.

Effect of Addition of Balancing Masses.—Suppose masses added to the crank, as shown in Fig. 341, which will produce forces equal in magnitude and opposite in direction to the unbalanced portion of the

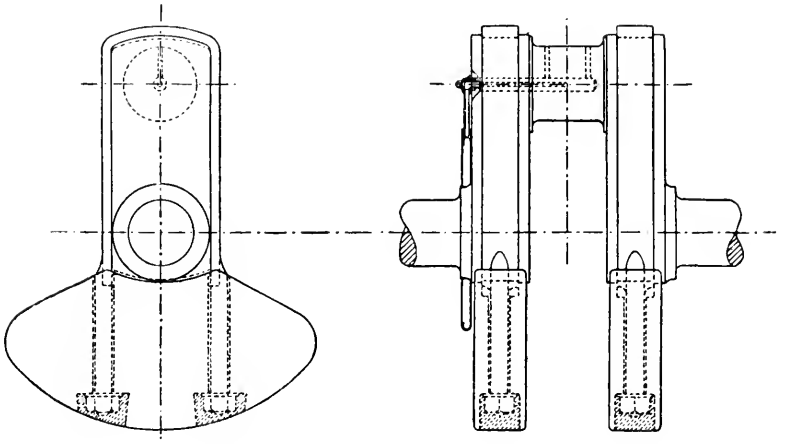

FIG. 341.

crank-shaft. The effect of this will be that the force represented by AB, Fig. 333, will be neutralized, and this circle will therefore disappear from the figure.

The remaining forces BC, CD (Fig. 333) are set off in magnitude and direction as before (Fig. 342), commencing with BC = the centrifugal force due to the portion of the connecting-rod supposed concentrated at the crank-pin, and which is measured from the centre, and drawing CD as before, for the acceleration due to the reciprocating parts.

The original curve A′ will thus be reduced to curve B′ by finding the new resultants for magnitude and direction, and setting them off from the centre B of Fig. 342 for the successive crank positions. By joining the extremities of the new resultants, the reduced curve of forces, curve B′, is obtained.

To carry the balancing still further, suppose balancing masses added sufficient to balance not only the unbalanced portion of the crank, but also the whole mass of the connecting-rod.

Referring to Fig. 343, the balancing force now required will be = AB, which represents the amount required to balance the crank-shaft itself, plus BC, the portion of the connecting-rod supposed to be concentrated at the crank-pin, plus CE, the further force required to balance the remainder of the connecting-rod.

The conditions are now as follows: AD (Fig. 343) is the resultant, as before, of the original forces for position AB of the crank; and we have now to find the resultant effect of two forces, namely AD

and that due to the balancing mass, whose centrifugal force = AE acting in a direction opposite to the crank.

This resultant is obtained by joining E to D. Then ED is the resultant required for crank position AB. In the same way the resultant may be found for successive positions of the crank.

If now lines be laid off from centre A, equal and parallel to the respective resultants, in the same way that A1 is drawn equal and

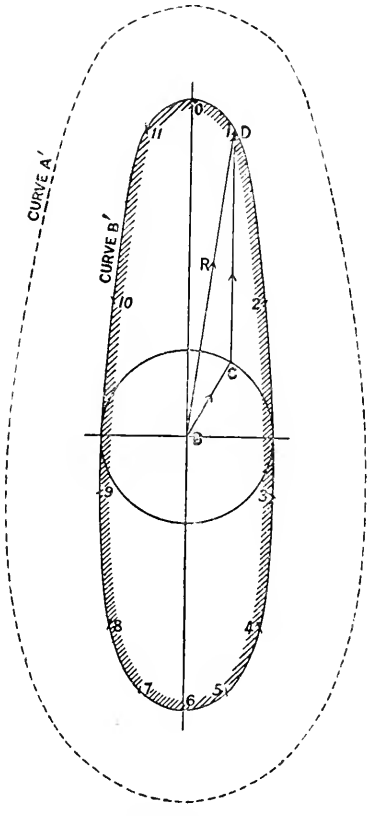

Fig 342.

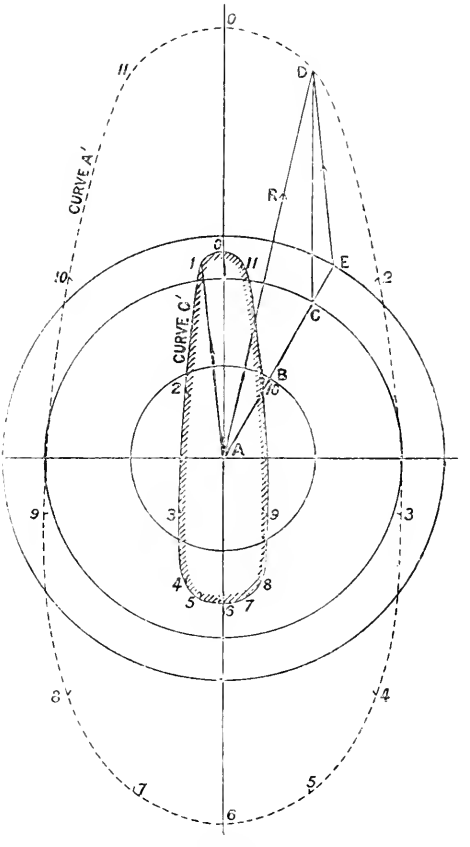

Fig. 343.

parallel to ED, the successive points 1, 2, 3, etc., will be obtained through which to draw the force curve C'. Care must be taken to work round the crank positions in successive order, and to mark the corresponding crank number on the force curve. It will be noticed that the numbers on the force curve C'—when drawn in accordance with the direction of the resultant—have changed sides, and that

they proceed round the figure in the opposite direction to those on curve A′ (Fig. 343). From this it will be evident that if any further balancing mass is added, the result will be that curve C″ will become flatter vertically and more extended horizontally (see curve D′, Fig. 344). The extent to which such balancing should be carried will depend upon the judgment of the designer.

Curve D′ (Fig. 344) has been drawn for a balance weight whose centrifugal force is represented by the radius of the circle M. These diagrams show how the problem of balancing is affected by the speed of rotation, for since all the forces are proportional to $\omega^2 r$, they increase in magnitude as the square of the angular velocity, and only directly as the radius, and therefore an increase of revolutions per minute rapidly increases the magnitude of the force curve.

The ordinary quick-revolution engine for electric lighting runs at from two hundred to six hundred revolutions per minute according to size, hence the great importance of attention to balancing in such engines.

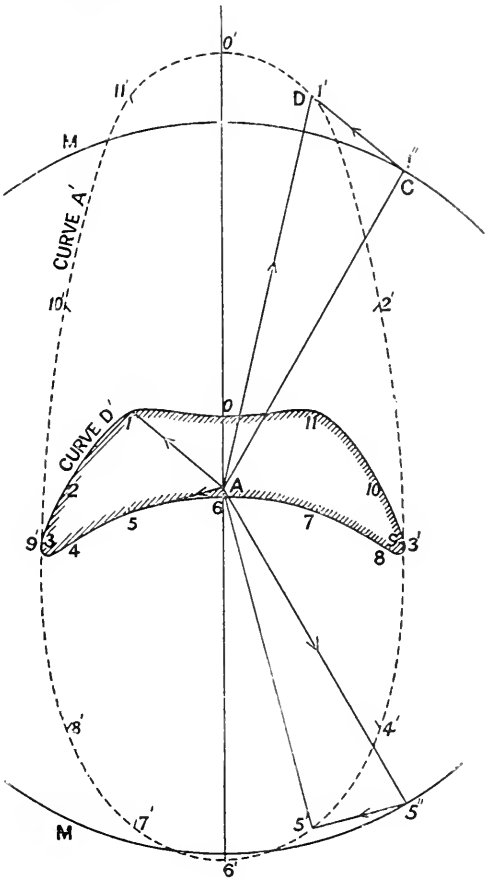

FIG. 344.

Curves showing Vertical Components of Unbalanced Forces on Foundations of Vertical Engines due to Inertia of Moving Parts.—The diagrams constructed in the form of an ellipse in Figs. 333, 342, 343, and 344 may be drawn on an extended base (representing the unfolded crank-pin path), the vertical resultants of the forces for each successive position of the crank being used as ordinates, which when joined form a series of wave-like curves.

By this form of representation the net upward or downward

pressure on the foundations resulting from combinations of engines on one crank shaft may be well seen.

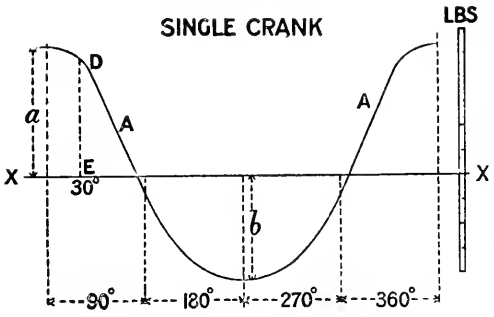

FIG. 345.

Single-crank Vertical Engines. — Fig. 345 shows a curve, AA, which is drawn by first taking a horizontal line, XX, to represent the unfolded crank-pin path, and dividing it in a scale of degrees. Then for any number of positions of the crank, a vertical line is set up representing the vertical component of the unbalanced force whose height a above the base line, or of b below the base line, is equal to the vertical component of the resultant force for the corresponding crank position as found on the elliptical diagrams Fig. 333, etc.

Thus, comparing Figs. 333 and 345, the position AB of the crank (Fig. 333) corresponds to the 30° position (Fig. 345), and, considering the case of a single crank at a time, the vertical height DE (Fig. 345) depends upon the amount of balancing, by the addition of balance weights, which has been employed. Thus, if there are no balancing weights, then the vertical component of the resultant AD (Fig. 333) for the crank position AB = AH, and ED at crank position 30° (Fig. 345) = AH (Fig. 333).[1] If the crank itself is balanced, then ED (Fig. 345) = the vertical component of the resultant BD = ED (Fig. 333).[1] Or if the balancing by addition of weights has been carried so far as to balance the crank and the portion of the connecting-rod assumed as rotating with the crank-pin, then there is no vertical resultant due to BC, that part being balanced, and the height ED (Fig. 345) = the vertical CD (Fig. 333).[1]

The maximum range of vertical forces for a single-crank engine = the maximum value of $a + b$. It will be noticed that the length a, Fig. 345, is greater than that of b, and these lengths are in the proportion—

$$\frac{Wv^2}{gr}\left(1 + \frac{1}{n}\right) : \frac{Wv^2}{gr}\left(1 - \frac{1}{n}\right)$$

This difference between the maximum upward and downward vertical stresses on the foundation due to inertia of the moving parts is sufficient in itself to cause appreciable and even considerable vibration, and accounts for many of the troubles in engines which were otherwise supposed to be well balanced.

Two Cranks 180° apart.—Fig. 346 shows a pair of curves, A and B, for two engines working on the same crank-shaft with reciprocating

[1] The figures are drawn to different scales.

parts of *equal weight* and with cranks opposite. Curve B is, of course, merely a repetition of curve A, and set 180° ahead of A, but the vertical dimensions are the same for both curves.

So far as vertical forces due to inertia are concerned, the direction of the cranks being always opposite, the forces acting on the foundation due to each set of moving parts are also opposite, and they therefore tend to neutralize each other. If the obliquity of the short connecting-rod were neglected, then the vertical component for the two engines would exactly neutralize one another, and the resultant vertical force would be *nil*. But in high-speed vertical engines the connecting-rod is usually exceptionally short, and the result is that a large difference occurs between the inertia effects in the upper and lower halves of the revolution. The difference may amount to many tons in large high-speed, short-stroke engines.

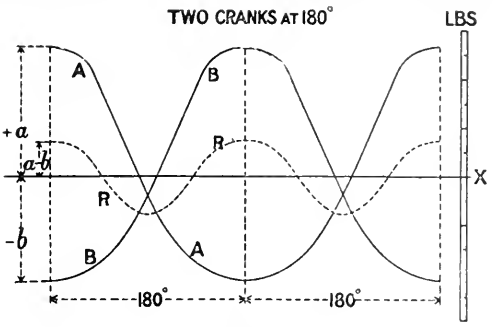

FIG. 346.

When these curves, A and B, Fig. 346, are combined as shown, the net resultant vertical force, shown by the dotted line R, is obtained by taking the algebraic sum of the upward forces a and the downward forces b for successive positions of the crank $= (a - b)$, and setting off the result above or below the line XX, according as the result is positive or negative.

Fig. 346 shows by the dotted line R that the maximum range of vertical force upon the foundation is much reduced when two cranks at 180° are used instead of a single crank, and when the weights of the moving parts are equal in each engine. It is thus clear that a pair of simple engines will work more smoothly on cranks at 180° than a pair of compound engines, unless the weight of the moving parts of each engine of the compound is made equal by increasing, say, the weight of the high-pressure piston.

Two Cranks at 90°.—Fig. 347 shows curves A and B representing the vertical components of the forces for a pair of engines of equal weight of moving parts and with cranks at right angles. The curve B is the same as curve A, and is set 90° ahead of it. The dotted line R gives the resultant vertical forces of the combined cranks on the foundation, and is shown in this case to be considerable. If the weight of the moving parts of engine B were greater than those of engine A, then the maximum vertical forces due to inertia would be still greater than before. Hence, for the purpose of balancing quick-revolution engines, two cranks opposite, with pistons of equal weight,

are much to be preferred to two cranks at 90° and pistons of unequal weight. With the former arrangement, however, it is necessary to increase somewhat the diameter of the crank-shaft to secure sufficient strength (see Fig. 268). With cranks at 90°, it is specially important that the range of vertical forces on the foundation should be reduced by the use of balance weights.

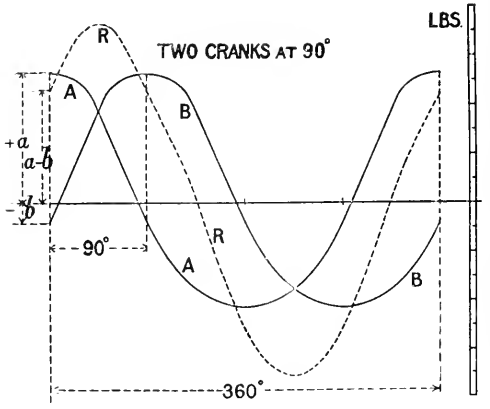

FIG. 347.

Three Cranks at 120°.—Fig. 348 shows three curves of vertical forces, A, B, and C, for a set of triple engines, of equal weights of reciprocating parts, and with cranks 120° apart.

It will be found in this case that the resultant curve obtained by taking the sum of the three forces at any crank position, and shown dotted (R) in Figs. 346, and 347, now disappears, and the tendency to vibration due to the vertical effect of the inertia of moving parts is eliminated, notwithstanding the difference between the acceleration and retardation of the moving parts in the upper and lower halves of the revolution.

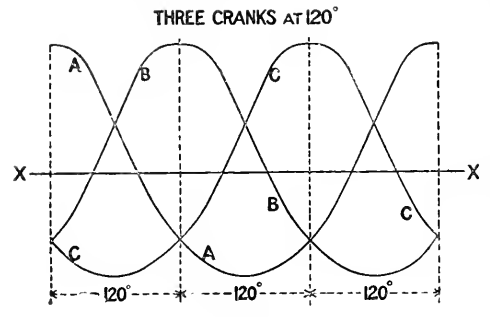

FIG. 348.

The fact that the sum of the inertia effects is zero, whatever the length of the connecting-rod, was first pointed out by M. Normand, of Havre. The proof is as follows:—

Let F_1 = force due to inertia in one cylinder; F_2 for the second cylinder, etc.; W = the weight of the reciprocating parts; and the other terms as before; then—

$$F_1 = \frac{W}{g}\left(\cos\theta + \frac{1}{n}\cos 2\theta\right)\omega^2 r$$

$$F_2 = \frac{W}{g}\left\{\cos(\theta + 120°) + \frac{1}{n}\cos 2(\theta + 120°)\right\}\omega^2 r$$

$$F_3 = \frac{W}{g}\left\{\cos(\theta + 240°) + \frac{1}{n}\cos 2(\theta + 240°)\right\}\omega^2 r$$

$$
\begin{aligned}
F_1 + F_2 + F_3 &= \frac{W}{g}\omega^2 r\{\cos\theta + \cos(\theta + 120°) + \cos(\theta + 240°)\} + \frac{W\omega^2 r}{gn}\{\cos 2\theta \\
&\quad + \cos(2\theta + 240) + \cos(2\theta + 480°)\} \\
&= \frac{W\omega^2 r}{g}(\cos\theta + \cos\theta\cos 120° - \sin\theta\sin 120 + \cos\theta\cos 240° \\
&\quad - \sin\theta\sin 240°) + \frac{W\omega^2 r}{gn}(\cos 2\theta + \cos 2\theta\cos 240° - \sin 2\theta\sin 240° \\
&\quad + \cos 2\theta\cos 480° - \sin 2\theta\sin 480°) \\
&= \frac{W\omega^2 r}{g}\left(\cos\theta - \tfrac{1}{2}\cos\theta - \frac{\sqrt{3}}{2}\sin\theta - \tfrac{1}{2}\cos\theta + \frac{\sqrt{3}}{2}\sin\theta\right) \\
&\quad + \frac{W\omega^2 r}{gn}\left(\cos 2\theta - \tfrac{1}{2}\cos 2\theta + \frac{\sqrt{3}}{2}\sin 2\theta - \tfrac{1}{2}\cos 2\theta - \frac{\sqrt{3}}{2}\sin 2\theta\right) \\
&= \frac{W\omega^2 r}{g}(0) + \frac{W\omega^2 r}{gn}(0) \\
&= 0
\end{aligned}
$$

The removal of the vertical component of the inertia effects by the combination of three cranks at 120°, with equal weights of reciprocating parts, is an important point in favour of such an arrangement of cranks.

Four Cranks in Pairs of Two Cranks opposite.—In this case also, as in that of the triple engine, the resultant vertical force R disappears when the weights of the moving parts of each engine are equal.

Effect of Couples.—So far no account has been taken of the effect of the "couple" tending to rock the engine endwise, or to alternately lift and depress the opposite ends of the engine-bed on the line of the crank, each stroke, but obviously such a couple exists with engines of two or more cranks.

In the case of a two-crank engine with cranks opposite, the moment of the couple tending to turn the engine endwise, first in one direction and then in the other, is equal to the moment $(F \times a) = (F \times c) - (F \times b)$, tending to turn the engine about point d. A similar force on the alternate stroke tends to turn the engine round e.

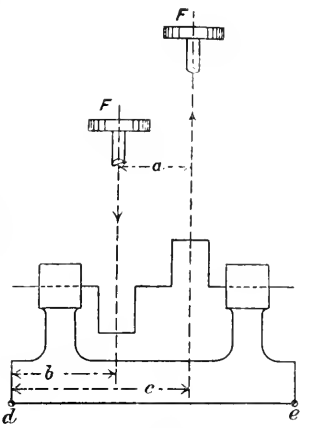

FIG. 349.

Where the value of F at the top position of the piston is greater than at the bottom, as when a short connecting-rod is used, then the disturbing force is greater still, as has already been seen.

This tendency to end vibration may be neutralized by the addition of another pair of similar engines working on a common bed-plate tending to produce an opposite couple, and arranged so that the two inside cranks coincide in one direction, and the two outside cranks coincide in the opposite direction (Fig. 350). Here the opposing tendencies to rocking are borne by the bed-plate, and are therefore self-contained,

and so long as the bed-plate is sufficiently strong no vibration is transmitted to the foundation.

The above four-engine arrangement is equivalent to the following (Fig. 351), which is a triple engine with the middle crank carrying reciprocating parts whose weight is twice that of the moving parts of the outside

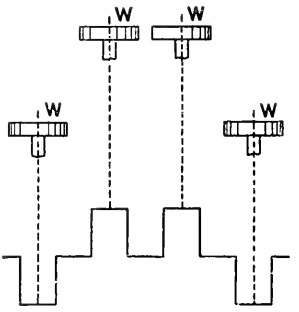

Fig. 350.

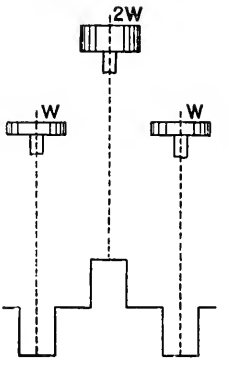

Fig. 351.

engines. Here, as in the previous figure, the couples are balanced, though owing to the short connecting-rod the vertical forces are not balanced.

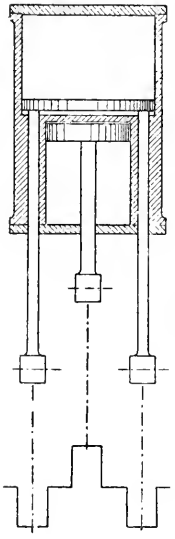

Fig. 352.

Fig. 352 is a design which accomplishes the same result as in Fig. 351, but with two cylinders only. In this design the low-pressure piston works in the opposite direction to the high-pressure piston. The high-pressure piston is connected to the central crank, and the low-pressure piston to the two outside cranks, by means of two piston-rods which work through bushes passing through the metal of the low-pressure cylinder. The weights of the moving parts for both high and low pressure engines are made equal.

In a triple engine with equal weights of reciprocating parts and cranks at 120°, the couple is not balanced, though the engine may be balanced in other respects.

To get over this difficulty, it was first suggested by Mr. Robinson, of Messrs. Willans and Robinson, to combine two sets of triple-crank engines on the same single rigid bed-plate, and arrange the cranks so that each of the two sets of engines tended to set up opposite couples to its neighbour. Thus, if the cranks are numbered 1, 2, 3, 4, 5, 6, then if 3 and 4 are vertical, 2 and 5 will point to the right and be 30° below the horizontal, and 1 and 6 will point to the left and be also 30° below the horizontal. Then these two separate, unbalanced couples neutralize each other, and as there is no tendency to vibration

from vertical forces in each of the two triple engines, the engine is free from vibration.[1]

Vibration due to the couple, in engines for light vessels, such as torpedo-boats, may be to some extent modified by strong diagonal fore-and-aft bracing-stays connecting the after cylinders with the forward part of the bed-plate (Fig. 353). By this means the engines are made more rigid, and the vertical couple of moment M × D, which would give to the hull of a light vessel a vertical undulatory motion, is replaced and absorbed by a horizontal moment, N × E, the length E being the vertical distance between the longitudinal deck stays, and the fastenings of the bed-plates with the bottom of the ship.

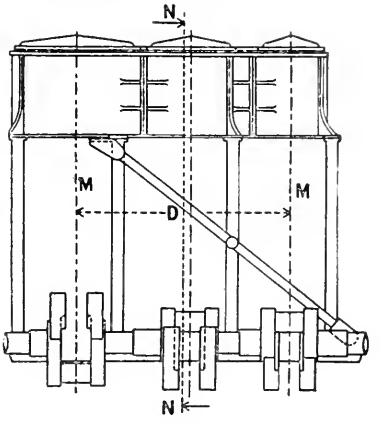

FIG. 353.

M. Normand points out[2] that without a complete system of strong diagonal, longitudinal bracing of the engines, and horizontal stays at the top and bottom, the equalization of the weights of the reciprocating parts (though decreasing the net vertical stress) would *increase* the rocking motion due to the couple, and the more so the longer the distance D between the fore and aft cylinders.

The Use of a Plane of Reference.[3]—If a loaded crank rotate about the axis of a crank-shaft, the outward force or pull acting radially through the centre of mass $= F = \frac{W}{g}\omega^2 r$.

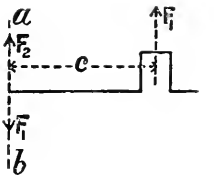

FIG. 354.

But if the effect of this radial pull is considered in relation to some plane *ab* at right angles to the axis, but at some distance *c* from the crank, and which we will call the plane of reference, then the effect of the single force F_1 (Fig. 354) acting at the crank is equal to—

(1) A force, F_2, acting in the plane equal and parallel to F_1, together with

(2) A couple of moment, $F_1 \times c$, tending to turn the shaft round in a plane at right angles to the reference plane.

If several cranks rotate in the same shaft at any angle with each

[1] See a paper by Mr. Robinson and Captain Sankey, *Proc. Inst. Naval Architects*, 1895.

[2] *Engineering*, October 27, 1893.

[3] For the method which follows, dealing with the balancing of four-crank engines, the author is indebted to Prof. Dalby's valuable paper on the "Balancing of Marine Engines:" *Proc. Inst. Naval Architects*, 1899.

other, and at various distances from the reference plane, then each separate radial force, when referred to a common plane of reference, is equivalent to a force acting in that plane, equal and parallel to the original force, and to a couple the moment of which is equal to the force at the crank multiplied by its distance from the reference plane.

Reciprocating Masses.—If masses M_1 and M_2 on the respective cranks of a two-crank engine with cranks opposite are equal, then the cranks are balanced in all positions, so far as moments about the crank shaft axis are concerned (neglecting the effect of the short connecting-rod, and the couple).

Also, for all positions of the opposite cranks, the engine is similarly in balance if, for the equal rotating masses, equal reciprocating masses are substituted, each driven from its respective crank; and thus the result as to balance is the same whether the masses are reciprocated or rotated. Hence, if masses balance as a rotating system, they balance also as a reciprocating system.

Similarly for any number of cranks, at any angles, if the rotating masses balance, the reciprocating masses will also balance, provided they are respectively arranged in the same proportion to each other as the rotating masses.

The conditions of balance may now be stated thus:

(1) If, in the plane of reference, lines taken in order be drawn parallel to the respective crank radii and proportional to the *forces* (or to the masses when the cranks are of equal radius) acting at the respective crank-pins, the figure obtained is a closed polygon.

(2) If, in the plane of reference, lines taken in order be drawn parallel to the respective crank radii and proportional to the *moments of the forces* (or of the masses when the cranks are of equal radius) acting at the respective crank-pins *about the origin at the plane of reference*, the figure obtained is a closed polygon.

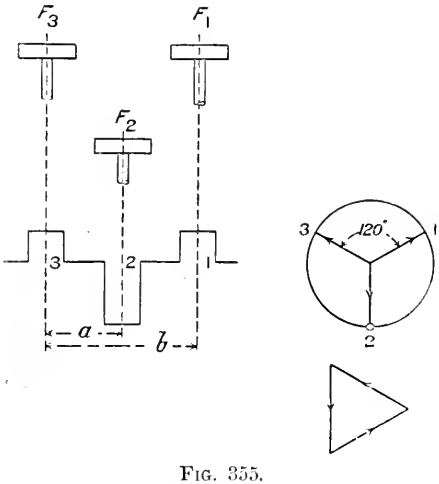

FIG. 355.

These conditions apply equally whether the masses are reciprocating or rotating, the reciprocating masses being considered, for the purpose of solving the problem of balance, as if they were rotating masses.

For a *triple-crank* engine (Fig. 355), with cranks at 120°, if a plane of reference be taken through one of the end cranks (say No. 3) and the crank positions be projected on the plane, then condition (1) may be fulfilled, so far as the forces acting at the respective crank-pins

are concerned, when those forces are equal, because a closed figure may be drawn whose sides are equal to each other and parallel to the crank radii.

But it is evident that when the forces at the crank-pins are unequal and the cranks are at 120°, the condition of balance of forces is not fulfilled, because it is not possible to close the force polygon.

It is also evidently impossible to fulfil condition (2) for a three-crank engine, as the moment of the force acting on crank 3 about the origin at the reference plane is zero, and the two remaining moments $(F_1 \times b)$ and $(F_2 \times a)$ do not form a closed figure; unless the cranks are as shown in Fig. 351, which fulfils all conditions of balance, except for the disturbing effects of the short connecting-rod. It will be observed that the conditions here laid down for perfect balance ignore the effect of the short connecting-rod, which effect, as has been already explained, may in itself cause considerable vibration, though the engine is balanced in all other respects. The influence of the short connecting-rod is more serious in quick-revolution engines, as its disturbing effect varies with the square of the angular velocity of the crank.

Applying the previous conditions of balance to the case of a four-crank engine, suppose the respective distances between the cylinder centre lines are chosen (Fig. 356), and the weights of reciprocating parts for three of the engines are approximately fixed, it is required to find (1) the relative crank positions, (2) the reciprocating mass for the fourth crank necessary to balance the mass of the other three cranks.

Take a plane of reference through one of the end cranks, namely, crank 1, whose relative angular position and weight of moving parts are not yet fixed.

Then the data may be conveniently set out in a tabulated form as shown thus:

No. of crank.	Distance of centre of crank from reference plane.	Mass at crank.	Ratio of masses.	Mass moment about reference plane.
1	0	(1720)	(0·57W)	0
2	3 ft.	3000	W	9000
3	5 ft.	4500	1·5W	22,500
4	7 ft.	3000	W	21,000

The figures in the brackets are, in the first instance, unknown, and have to be determined by the construction which follows.

NOTE.—If the radii of the several cranks were different, then it would be necessary to multiply each mass in column (3) and each mass moment in column (5) by its respective crank radius; but in ordinary engines the crank radius is the same throughout, and the proportional result is not affected.

First, draw the polygon of mass moments about the origin in the

reference plane. In this case, since one of the cranks is in the reference plane, only three cranks have moments about the plane, and the polygon is therefore a triangle.

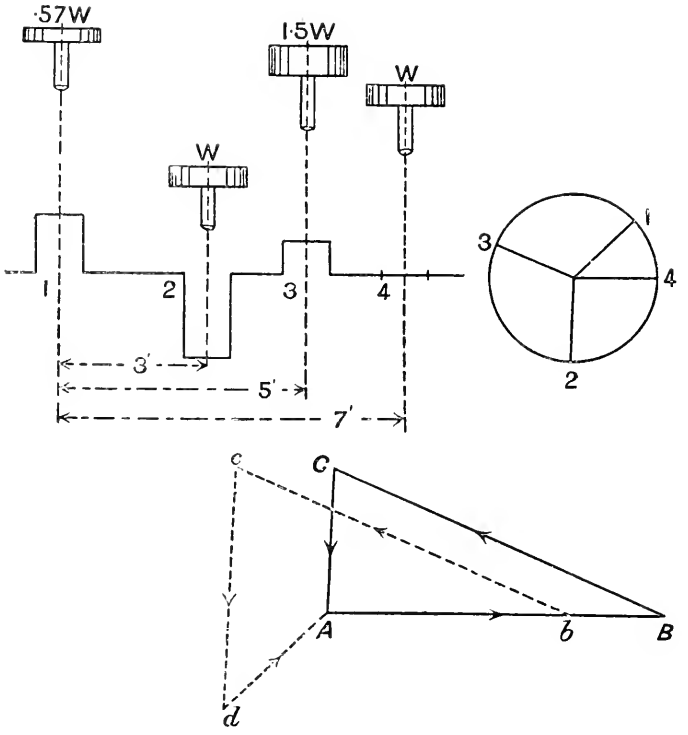

Fig. 356.

First, for crank 4, draw AB horizontal = 3000 × 7 = 21,000 to any convenient scale of units;

For crank 3, draw BC = 4500 × 5 = 22,500

For crank 2, draw CA = 3000 × 3 = 9000

These lines form a closed triangle of *mass-moments*, and the cranks are in balance if made parallel to the lines AB, BC, and CA, namely, cranks 4, 3, and 2 parallel to AB, BC, and CA respectively. These directions of the cranks are then drawn as shown in Fig. 356.

It now remains to find the direction of the crank No. 1 relatively to the remaining cranks, and to find the mass rotating at the crank-pin, in order to complete the balance.

This will be obtained in the next process by finding the direction and magnitude of the line required to close the mass polygon. Whatever position crank No. 1 may have will not affect its mass-moment

balance, as the crank is in the reference plane, and its moment is = 0.

Secondly, draw the mass polygon to some other scale of units, making the lines representing the *mass* at each crank parallel to the respective cranks.

The figure may be partly superposed upon the moment polygon, and the mass lines, for each crank, drawn parallel to the moment lines. Thus A*b* = 3000 = mass at crank 4 ; *bc* = 4500 = mass at crank 3 ; *cd* = 3000 = mass at crank 2. Then the line *d*A required to close the mass polygon gives in magnitude the mass of the rotating or reciprocating parts, whichever may be under consideration, and the direction *d*A, when transferred to the end view of the crank-shaft, gives the angular direction of crank 1.

To check the accuracy of the work, it is well to take a new reference plane through crank 4, and to draw a new mass-moment triangle, composed of the moments of cranks 1, 2, and 3 about the origin at crank 4. If the figure again closes, the work is correct.

This diagram (Fig. 356) is given as illustrating method of procedure, and is, of course, subject to the modification as to weights and centre distances to suit practical requirements.

CHAPTER XX.

STEAM-ENGINE PERFORMANCE.

In the early days of engine-testing, it was usual to express the performance of the engine in terms of the number of pounds of coal used per indicated horse-power per hour.

If the object were to express the performance of the whole plant—engine and boiler included—and if the heat value of 1 lb. of coal were a constant quantity, then there would be no objection to this unit of measurement, and it was, and is still, in fact a useful, if not an exact method.

But as a scientific measure of the performance of the engine itself it was valueless, because it included also the performance of the boiler, which latter might be either good or bad; and thus two engines of equal merit, the one attached to a good and the other to a bad boiler, might show widely different results.

The more usual system at present is to express the performance of the engine in pounds of steam used per hour per indicated horse-power. But this unit also is not satisfactory, because the number of heat-units employed to generate a pound of steam is not uniform, but depends upon the pressure of the steam, the temperature of the feed-water, and, if superheated, the degree of superheat employed.

The error is comparatively unimportant when saturated steam within the ordinary limits of pressure is being considered, but for superheated steam the case is very different. Thus the total heat from 32° Fahr. per pound of saturated steam at 50 lbs. absolute pressure is 1167 heat-units, and at 150 lbs. pressure it is 1190 heat-units, while the total heat of steam at 150 lbs. pressure superheated 300° Fahr. is 1334; and since it is the heat that does the work, and not the steam, the weight of steam used as a measure of relative efficiency is very misleading. In each of the above cases 1 lb. of steam may be used, but in the last case—that of the superheated steam—it contains 14·3 per cent. more heat than the 1 lb. of saturated steam at 50 lbs. pressure.

A committee of the Institution of Civil Engineers has recently considered this question, and issued a report containing the following recommendations:—

"1. That 'thermal efficiency,' as applied to any heat-engine, should

mean the ratio between the heat utilized as work on the piston by that engine, and the heat supplied to it.

"2. That the heat utilized be obtained by measuring the indicator diagrams in the usual way.

"3. That in the case of a steam-engine, the heat supplied be calculated as the total heat of the steam entering the engine, less the water-heat of the same weight of water at the temperature of the engine exhaust, both quantities being reckoned from 32° Fahr.

"4. That the temperature and pressure limits, both for saturated and superheated steam, be as follows:—

"Upper limit: the temperature and pressure close to, but on the boiler side of, the engine stop-valve, except for the purpose of calculating the standard of comparison in cases when the stop-valve is purposely used for reducing the pressure. In such cases the temperature of the steam at the reduced pressure shall be substituted. In the case of saturated steam the temperature corresponding to the pressure can be taken.

"Lower limit: the temperature in the exhaust-pipe close to, but outside, the engine. The temperature corresponding to the pressure of the exhaust steam can be taken.

"5. That a standard steam-engine of comparison be adopted, and that it be the ideal steam-engine working on the Rankine cycle between the same temperature and pressure limits as the actual engine to be compared.

"6. That the ratio between the thermal efficiency of an actual engine and the thermal efficiency of the corresponding standard steam-engine of comparison be called the efficiency ratio.

"7. That it is desirable to state the thermal economy of a steam-engine in terms of the thermal units required per minute per I.H.P., and that, when possible, the thermal units required per minute per B.H.P. be also stated.

"8. That, for scientific purposes, there be also stated the thermal units required per minute per H.P. by the standard engine of comparison."[1]

The steam-engine was taken to include everything between the boiler side of the engine stop-valve and the exhaust flange. The condenser was not included.

In accordance with the above recommendations, it is probable that in future steam-engine performance will be expressed in terms of thermal units required per minute per I.H.P.

To convert pounds of steam per I.H.P. into B.T.U. supplied per I.H.P.—

$$\text{B.T.U.} = \frac{\text{weight of steam per minute} \times \text{net heat-units per pound}}{\text{I.H.P.}}$$

As the ideal standard of comparison, the Committee of the Inst. C.E. recommend a perfect engine working on the Rankine cycle, which is understood to mean an engine receiving steam at its upper limit of pressure and temperature equal to that measured close to but

[1] *Proc. Inst. C.E.*, vol. cxxxiv.

on the boiler side of the engine stop-valve, and continuing this pressure and temperature up to cut-off. Beyond cut-off the steam is assumed to expand adiabatically in the cylinder down to a pressure equal to the back pressure against which the engine is working. The steam is then exhausted from the cylinder at constant pressure corresponding with the lower limit of temperature. The above cycle, which has hitherto been called the Clausius cycle, it is now proposed to call the Rankine cycle.

The B.T.U. required per minute per I.H.P. for the standard engine of comparison is given by dividing 42·42 by the efficiency of the cycle.

1. The efficiency of the Rankine cycle for saturated steam is given in the report above referred to as—

$$= \frac{(T_a - T_e)\left(1 + \frac{L_a}{T_a}\right) - T_e \text{ hyp. log } \frac{T_a}{T_e}}{L_a + T_a - T_e}$$

See equation (1), p. 54, where T_a and T_e = absolute temperature of saturated steam at stop-valve and exhaust respectively.

2. For superheated steam the efficiency becomes—

$$\frac{(T_a - T_e)\left(1 + \frac{L_a}{T_a}\right) + 0{\cdot}48(T_s - T_a) - T_e\left(\text{hyp. log } \frac{T_a}{T_e} + 0{\cdot}48 \text{ hyp. log } \frac{T_s}{T_a}\right)}{L_a + T_a - T_e + 0{\cdot}48(T_s - T_a)}$$

where T_s = absolute temperature of superheated steam at stop-valve.

If expression (1) above be = a, and expression (2) be = b, then $42{\cdot}42 \times \frac{1}{a}$ = B.T.U. per I.H.P. per minute for the standard engine of comparison for saturated steam, and $42{\cdot}42 \times \frac{1}{b}$ for superheated steam.

To facilitate the use of the standard, and to avoid calculation, the following diagram (Fig. 347), prepared in the first instance by Captain Sankey, may be used, from which the number of B.T.U.'s per I.H.P. per minute may be read directly for the case of the ideal engine working between known limits of temperature T_a and T_e.

EXAMPLE.—Suppose an engine working between the temperature limits of 350° for initial steam and 140° for exhaust steam, then where the vertical through the 350° point on the base line cuts the curve through the 140° point on the right-hand scale, we find the horizontal line which, when traced to the left-hand scale, gives 180 as the number of B.T.U.'s per I.H.P. per minute required by the ideal engine working between these temperature limits.

Boulvin's Method of Transferring Indicator Diagrams to the Temperature-Entropy Chart.—The following diagram, first devised

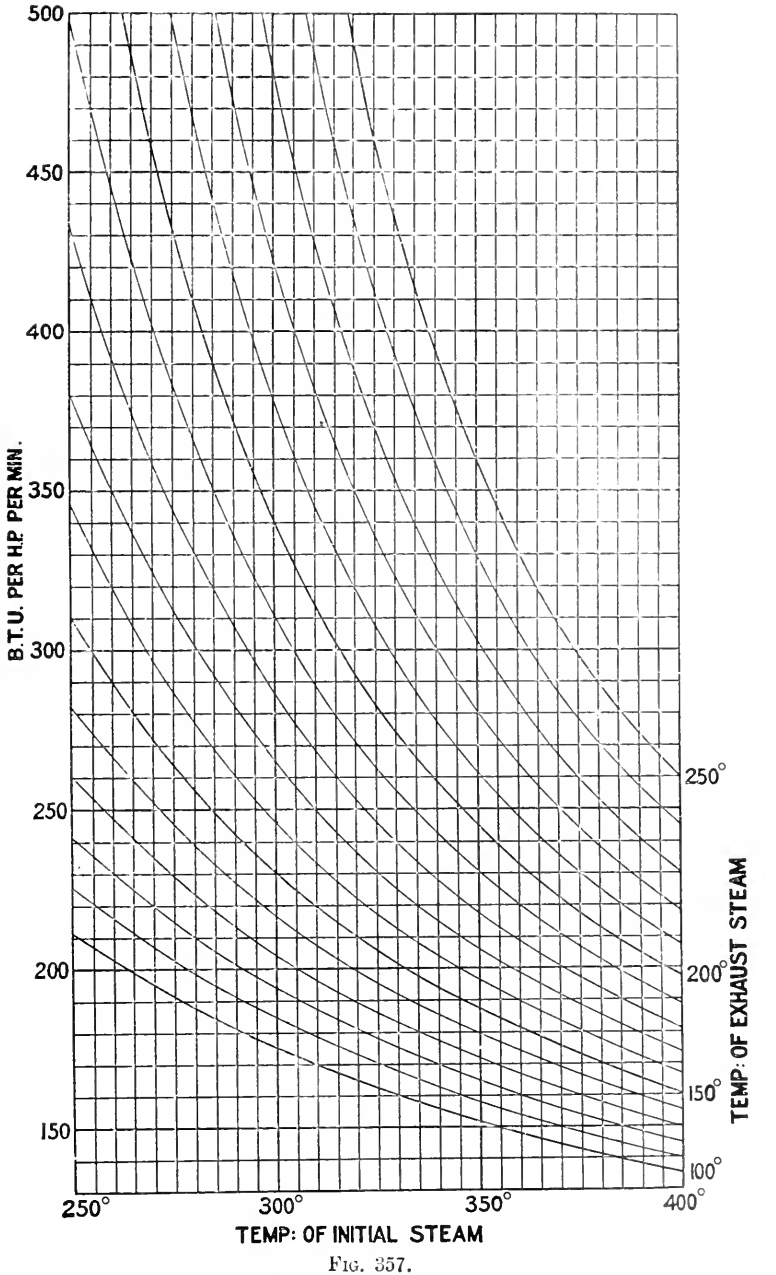
500
450
400
350
300
250
200
150
B.T.U. PER H.P. PER MIN.
250°
300°
350°
400°
TEMP: OF INITIAL STEAM
250°
200°
150°
100°
TEMP: OF EXHAUST STEAM

FIG. 357.

by Professor Boulvin, illustrates a useful method of transferring in full the indicator-diagram to the $\theta\phi$ chart. By means of such transfer it is readily seen where the losses in any engine or combination of engines occur.

It shows for any engine what use it makes of the heat-units supplied

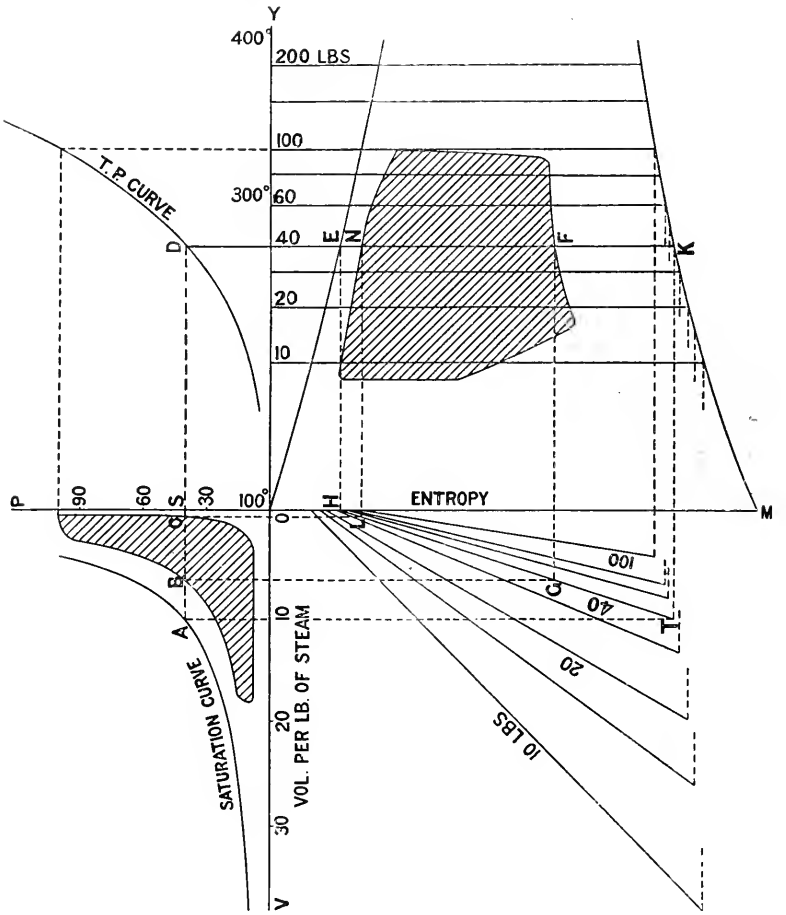

FIG. 358.

to it per pound of steam, and by plotting diagrams from separate engines whose performance it is desired to compare one with the other, it is easily seen where and in what respect one engine is superior to another in efficiency as a heat-engine.

Four axes are drawn from centre O, in Fig. 358, namely OP, OY,

OM, and OV, which represent respectively lines of pressure, temperature, entropy, and volume to any convenient scales.

Set off on OY a scale of temperatures, and on OP a scale of pressures; a temperature-pressure curve is then drawn in YOP by joining the intersections of the projections from corresponding pressure and temperature values for steam, as obtained by reference to the Steam Tables.

The temperature-entropy portion YOM of the diagram between the axes of temperature and entropy may be drawn, as already described on p. 43, or the respective lines of the diagram may be transferred from the chart, Plate I.

For the line of volumes, set off along the OV, to any convenient scale, a scale of cubic feet, and make its length at least equal to that of the volume of 1 lb. of steam at the lowest pressure used. With the scales of volume and pressure now fixed, draw from the Steam Tables the saturated steam curve.

To place the indicator diagram in the pressure-volume portion POV of the figure, it is necessary to already know the relation of the indicator diagram to the clearance line and the saturation line (see p. 116), in which case it can be transferred directly by plotting it to the new scales of pressure and volume.

To transfer the indicator diagram to the temperature-entropy portion of the figure by means of the graphical method, it is necessary to draw lines relating volume and entropy, as shown in the volume-entropy portion VOM of the diagram. To draw these lines, take any convenient point A on the saturation curve, say through 40 lbs. on the pressure scale; draw the vertical line AD to the temperature-pressure curve, and the horizontal line DK cutting the temperature-entropy lines in E and K. Project EH vertically to meet OM in H, and project KT vertically to meet the horizontal line AT in T. Join HT. From B draw a horizontal BG to cut HT in G, and from G draw the vertical GF to cut EK in F. Then the point B on the indicator diagram is transferred to the point F on the temperature-entropy chart. Any further number of points may be transferred in a similar manner.

Weight of Steam used by the Engine.—1. When the engine exhausts its steam into a surface-condenser, then if the condensed steam be collected and weighed, and at the same time the power of the engine be determined from indicator diagrams, the weight of steam per I.H.P. per hour may be directly determined. The weight of condensed steam should correspond with the weight of feed-water supplied to the boiler during the same period.

2. When the engine exhausts into a jet condenser, it is more difficult to determine the steam consumption at the condenser end, and it will usually be obtained by measurement of the boiler-feed. It may, however, be found with approximate accuracy by passing the combined condensing-water and condensed steam over a weir or tumbling-bay, or through a number of orifices (say twenty) bored out to gauge, and fixed level in the end of the tank receiving the

contents of the condenser. The tank should be provided with baffles to steady the flow of the current. If, then, the contents flowing from one of these orifices be collected separately and weighed, and the result multiplied by the number of orifices, the total weight of water passing away per unit of time will be obtained.

If S = weight of condensed steam, and W = weight of injection water, then total water weighed = W + S per minute. . . . (1)

If t_1 and t_2 = initial and final temperature of the injection water obtained by delicate thermometers, then $W(t_2 - t_1)$ = heat carried away by injection water. Let t_2 also equal temperature of feed.

Heat supplied by steam = $S(H - h_2)$, where H is total heat of the steam, and h_2 = (temperature of feed − 32). Then—

$S(H - h_2)$ = (work done in heat-units per minute) + $W(t_2 - t_1)$. (2)

Or, if temperature t_3 of feed is not the same as that of the condensed steam, then—

$$S(H - h_3) = \text{work done} + S(t_2 - t_3) + W(t_2 - t_1) \quad . \quad . \quad (3)$$

We have now two equations—(2 or 3) as above, and (1) equal to the numerical value in pounds of W + S by weight during the test.

By combining these equations the value of S, or the weight of steam per minute, can be obtained.

Then S ÷ I.H.P. = weight of steam per I.H.P. per minute

On the Increase of Initial Steam-pressure.—The economy of engines in regard to steam and coal consumption per unit of power will always be a most, if not the most, important factor in determining the relative value of different types and combinations of engines and boilers.

If this condition is to be fulfilled regardless of any other condition, then the direction in which such economy must be looked for is by the adoption of the highest practicable steam-pressures by the use of water-tube boilers—which are now working as high as from 250 to 300 lbs. per square inch and even more—and by the further adoption of superheating both in the first and again in the succeeding cylinders, combined, of course, at the other end of the scale with the most perfect condensing arrangements.

A study of the temperature-entropy diagram will show at once that in the directions above indicated must be sought the maximum theoretical efficiency of the steam-engine, and that with a constant minimum loss at exhaust, a maximum work area per pound of steam can only be obtained (1) by increased initial pressure, and (2) by reduced loss by cylinder condensation, which is the object of superheating ; the amount of superheating employed being so much as will secure dry saturated steam at cut-off, and not such an amount as will result in the actual presence of superheated steam after cut-off in the cylinder. The amount of superheat in the initial steam to secure this result has already been given in the chapter on Superheating.

The above requirements for maximum efficiency of the steam are to some extent ideal, and there are many practical difficulties which yet remain to be overcome, but they represent the direction towards which

the more progressive engineering will continue to aim; and where maximum power per unit of weight of machinery is the primary consideration, regardless of cost in other directions, the maximum possible pressures will be employed, and superheating, though at present in abeyance, will probably follow, at least in some degree.

But where other conditions than the above obtain, that is, where cost of maintenance, attendance, repairs, depreciation, loss through stoppages, etc., all have to be considered, as is the case in most stationary work, in estimating the real commercial economy, it is doubtful whether even the most up-to-date stationary engineering will adopt the extremely high pressures used by marine engineers for the sake of maximum *steam* economy as such, and as distinguished from all-round economy, though probably superheating will continue to increase in favour. In a recently published pamphlet giving the result of two-cylinder-compound engine trials, Messrs. Hick, Hargreaves & Co., of Bolton, say—

"At the present time there is a strong and increasing tendency towards compound engines working at a high boiler pressure (about 160 lbs.), in preference to triple and quadruple expansion engines for millwork. . . . Experience has shown that whilst two cylinder compound engines have great advantages in the way of simplicity and reliability, they can compete very closely even in steam-engine economy per I.H.P. with the best triple-expansion engines, and that they actually afford the least expensive and most satisfactory method of driving a factory when all the items of expense are taken into account. The use of superheating will tend strongly in the same direction by reducing the loss by cylinder condensation, the reduction of which is the one excuse for multiplying the stages of expansion in separate cylinders. Mill engines are fitted with valve gear capable of giving any desired ratio of expansion in each cylinder. This factor is frequently overlooked when comparing mill engines with marine engines, in which the valve gear employed will only allow of a limited amount of expansion in any one cylinder."

An investigation was recently (1897) carried out by Mr. Dugald Drummond on "the use of progressive high-pressures in non-compound locomotive engines," to ascertain the increase of efficiency derived from raising the boiler pressure. The following table shows some of the results obtained:—

Original pressure.	Raised to	Gain per cent. steam-consumption.
lbs. per sq. in.	lbs. per sq. in.	
140	160	11 to 13
150	175	15
150	200	31
175	200	11·92

As already pointed out, the numerical value of the thermal efficiency obtained by increasing initial pressures is proportional to the range of *temperature* worked through by the engine divided by the

[1] *Proc. Inst. C.E.*, vol. cxxvii. p. 225.

initial temperature (absolute). Also the initial temperatures do not increase at the same rate as the pressures; on the contrary, while the initial pressures rise very rapidly, the temperature increase is comparatively small, especially so at the higher pressures. Thus, for steam at 170 lbs. absolute pressure, the temperature is 368° Fahr., while for steam at 250 lbs. absolute pressure the temperature is 400° Fahr. If in both cases the steam is exhausted at a temperature of 150° Fahr., which is equivalent to a pressure of about 4 lbs. absolute, then it will be seen by measurement from Fig. 357 that in the case of the 170 lbs. initial pressure the B.T.U.'s per I.H.P. per minute required for the ideal engine = 175, and for 250 lbs. pressure the B.T.U.'s = 160, that is, a gain of $\frac{175 - 160}{175} \times 100 = 8{\cdot}6$ per cent., or in practice a gain of about 6 per cent. of heat expended per I.H.P., for an increase of 47 per cent. in the steam-pressure, which gain seems hardly likely to tempt engineers in the direction of an indefinite increase of pressure from the point of view of economy of heat, especially when the higher pressures are accompanied by difficulties such as—

(1) Increased strength, weight, and initial cost of boilers, steam-pipes, engine cylinders, and fittings.

(2) Increased losses by radiation throughout the whole plant, including boiler, steam-pipes, and engines.

(3) Increased cost for repairs and maintenance.

But, as already stated, there are other considerations, besides thermal efficiency, which leads to the adoption of the highest steam-pressures, especially that of the *increase of power per unit weight of engines*, which follows the increase of steam-pressure. For it will be remembered that in a given engine the power increases directly in proportion to the increase of initial pressure, the point of cut-off in the first cylinder being assumed constant.

Hence the reason for providing warships, for example, with the highest available working pressure regardless of difficulties.

Reduction of Pressure by Reducing-Valves.—It is now usual in water-tube boilers to reduce the pressure from 300 lbs. in the boiler to 250 lbs. at the engine. This permits of the initial pressure on the engine being kept more consistently constant than would be the case if there were no reducing-valve between the boilers and the engine; it is also equivalent to increasing the volume of the steam space of the boiler without increasing the size of the boiler. It is often stated that this wire-drawing of the steam by reducing the pressure from 300 to 250 lbs. per square inch, is a convenient means of supplying superheated steam to the engines. But unless the steam supplied by the boiler is perfectly dry, or nearly so, which is a large assumption, there can be no superheating: thus, the total heat of steam at 300 lbs. pressure = 1209·3, and at 250 lbs. pressure = 1204·2—that is, 5·1 units of heat are liberated when the steam is wiredrawn from 300 lbs. to 250 lbs. pressure. Assuming the boiler steam to contain 2 per cent. of moisture, then on passing through the reducing-valve the liberated

heat-units will evaporate $\frac{5{\cdot}1}{L}$ lbs. of water (moisture) into steam, where L = latent heat per pound of steam at 250 lbs. pressure. $\frac{5{\cdot}1}{829{\cdot}5} = 0{\cdot}006$ lb. of water evaporated. Therefore the steam wetness is now reduced from 0·02 lb. per pound to (0·02 − 0·006) lb. per pound, or the wetness is reduced from 2 per cent. to 1·4 per cent. But there has been no superheating of the steam.

If the steam from the boiler were perfectly dry, then on passing through the reducing-valve from 300 to 250 lbs. pressure 5·1 units of heat are liberated, and taking 0.48 as the specific heat of steam, then 5·1 ÷ 0·48 = 10·6 degrees of superheat.

Steam-consumption. The Willans Straight-line Law.—It was first pointed out by P. W. Willans that if the total steam-consumption per hour of a throttling or constant expansion engine be plotted as ordinates on a horse-power or mean-pressure base, the result is an oblique straight line, as shown in Fig. 359. That this must be so theoretically will be obvious from the following illustration.

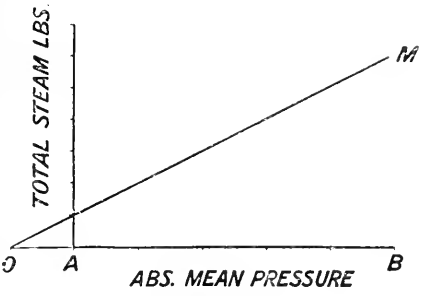

Fig. 359.

In Fig. 360 cut-off at 0·5 or two expansions is taken, and an initial pressure of 90 lbs. The mean pressure is = 76·2 lbs. (found by means of the formula $p_m = p\frac{1 + \text{hyp.log } r}{r}$), and the terminal pressure is 45. At an initial pressure of 45 lbs. the mean pressure is 38·1 lbs., and the terminal pressure 22·5 lbs.

In Fig. 361, the terminal pressures are set up vertically as ordinates, and the mean pressures are drawn horizontally as abscissæ; and the

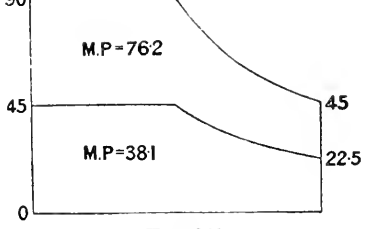

Fig. 360.

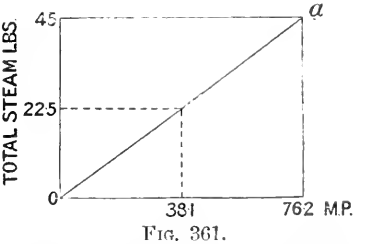

Fig. 361.

intersections give the straight line of steam-consumption *oa*, because the steam-consumption per stroke is proportional to the terminal pressure in theoretical engines.

If the term I.H.P. be substituted for "mean pressure," as may be done when the speed of any given engine is constant at all powers,

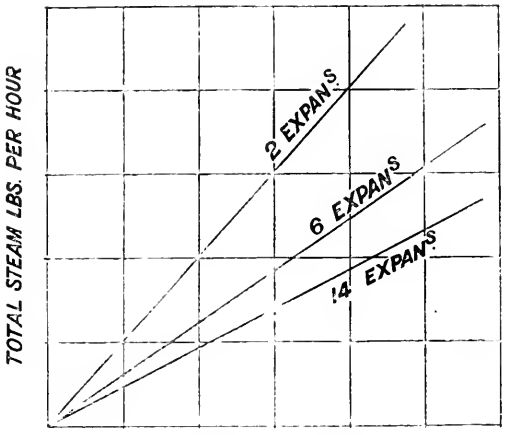

FIG. 362.

then it may be stated that the total weight of steam used varies directly as the I.H.P., or, in other words, the weight of steam per I.H.P. is constant at all powers when back pressure, friction, and all other losses are neglected.

The oblique straight line obtained by plotting the steam-consumption as explained above would not be quite straight, but slightly curved if adiabatic expansion had been used, instead of hyperbolic. By choosing various cut-off points a *series* of oblique lines may be drawn (Fig. 362), each separate straight line representing the steam-consumption for a separate fixed cut-off with variable initial pressure at that cut-off.

The Curve of Steam-consumption for Variable Expansion.—If a scale

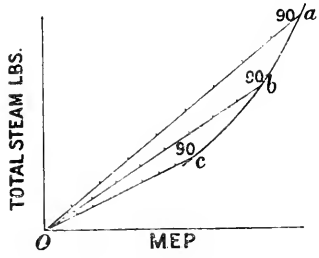

FIG. 363.

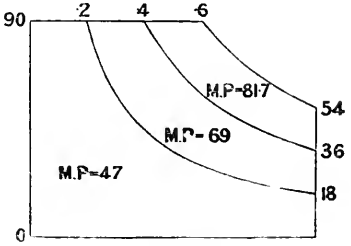

FIG. 364.

of absolute initial steam-pressures be marked along the oblique lines in each case, and a free curve be drawn by joining the corresponding

pressure-points on the respective oblique lines, then the curves obtained will give—by an ordinate measured to them from the base—the steam-consumption for a variable cut-off with a constant initial pressure; thus Fig. 363, line O*a* is drawn as a line of steam-consumption for a cut-off in the cylinder at 0·6, and at various initial pressures; line O*b* is drawn similarly for a cut-off at 0·4; and line O*c* for a cut-off at 0·2, and a pressure scale is marked upon each line respectively. By joining points *a*, *b*, *c* at the common pressure-points of 90 lbs., a curve of steam-consumption *abc* is obtained. If the vertical ordinate be measured to the curve for any point of cut-off from 0·2 to 0·6 of the stroke, the total steam-consumption is obtained at a constant initial pressure of 90 lbs. per square inch. The same result may be obtained by measurement from a theoretical indicator diagram, as follows:—

Draw indicator diagrams (Fig. 364) showing the variable expansion-curves for constant initial pressure with cut-off at 0·2, 0·4, 0·6 of the stroke, and find by measurement or calculation the mean pressure for each case reckoned to zero back pressure.

Then plot on squared paper the terminal pressures as ordinates, and the mean pressures as abscissæ (Fig. 365). The terminal pressures are proportional to the weight of steam exhausted, and the vertical scale may thus be made to represent steam-consumption.

Thus in Fig. 364, with cut-off at 0·6 of the stroke, the mean pressure is 81·7 lbs., and the terminal pressure 54 lbs.; at points of cut-off 0·4 and 0·2 the mean pressures are 69 and 47 respectively, and the terminal pressures 36 and 18.

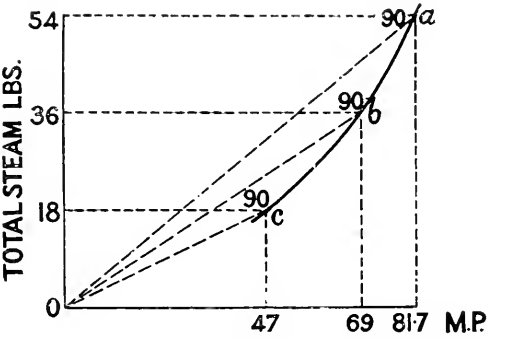

Fig. 365.

In Fig. 365 the mean pressures are plotted on a base-line, and the terminal pressures on the vertical scale to represent proportional steam-consumption. By joining the intersections of the corresponding mean and terminal pressures, the curve *abc* is obtained as before (Fig. 363).

It will be seen that this curve falls below the straight line *oa*, joining the origin *o* with the point *a* of maximum power, and if an ordinate be measured from the base-line at a given mean pressure, the vertical height measured to the curve is less than that measured to the straight line *oa*, and the difference between the two heights is the relative difference between the total steam-consumption under the two systems; the straight lines representing the varying steam-

consumption at fixed points of cut-off, when the power is regulated by throttling, either by hand or by a governor; and the curve representing the steam-consumption at constant initial pressure when the power is regulated by varying the point of cut-off by hand or by a governor.

In the same way, lines and curves have been drawn (Fig. 366) showing the relation between the steam-consumption when the two methods of varying the power are compared. Thus, taking three different cases of constant cut-off engines, namely, two, six, and fourteen expansions respectively, and comparing them with three variable expansion engines having the same cut-off at maximum power. If each starts with the same initial pressure and the same cut-off, as at *d*, *e*, and *f*, and the mean pressure is reduced (in the straight-line or throttling engine, by reducing the initial pressure; and in the variable expansion engine by keeping the initial pressure constant and increasing the number of expansions), then if the absolute terminal pressure of the theoretical indicator diagram, or the steam-consumption per stroke, be set up as verticals, it will be found that their height is less with the variable expansion than with the throttling engine.

It will be seen by the figure (Fig. 366) that the difference is much greater for the simple two-expansion engines than for engines with

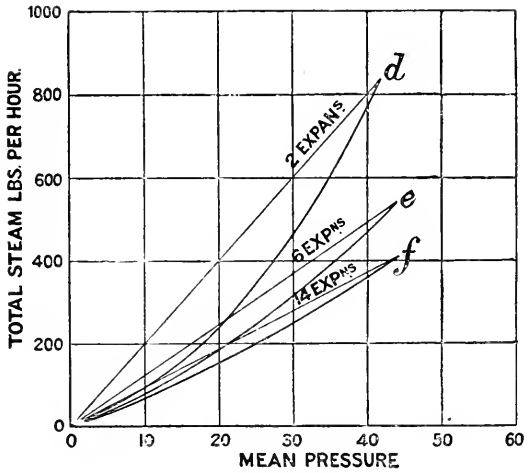

FIG. 366.

many expansions, such as triple-expansion engines, in which the possible difference between the two systems of regulating the power is small, as seen by the nearness of the curve to the straight line *of*.

If the engine considered is a theoretical non-condensing engine, then the oblique line OM (Fig. 359) is the line of steam-consumption; and OA is the back pressure of the atmosphere. In practical cases

the length OA represents the equivalent loss of effective mean pressure due to back pressure, condensation, leakage, radiations, etc.

Taking now a practical case in which the friction of the engine is included.

It will be noticed that in the theoretical cases taken so far, all the throttling straight lines and all the variable expansion-curves pass through the origin O of the diagram; that is to say, in a theoretical engine there is zero steam-consumption at zero mean pressure.

But in practice that is not the case, and if the oblique line drawn from an actual engine test be produced, it will be found not to pass through the origin O, but to cut the vertical line at some point above it, which will represent to scale the steam-consumption of the engine at zero mean pressure. The Willans oblique line for an actual throttling engine takes the form of—

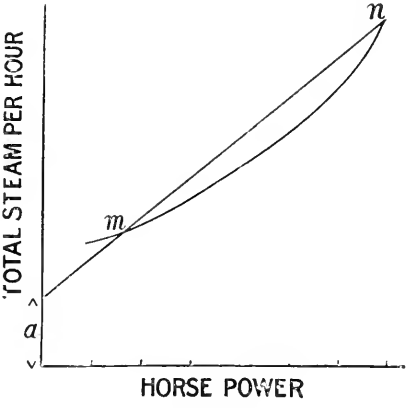

FIG. 367.

$$W = a + bP$$

where W is the total weight of steam used per hour; P is the indicated horse-power; a is the weight of steam used at zero mean pressure, and depends upon the extent of the back pressure and on the losses inherently due to the engine itself while running; b is a constant, depending also on the type of engine.

It will thus be understood that with a throttling engine *the full load is the most economical load*, because the effect of the constant a is proportionally less at high powers, and that as the power of a throttling engine is reduced, the consumption of steam per horse-power is increased.

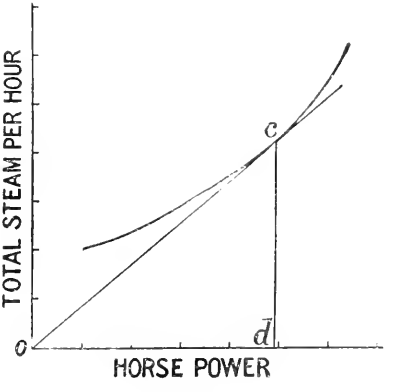

FIG. 368.

If the actual consumption lines be plotted for an engine working through its full range of power, first with variable initial pressure, and secondly with variable cut-off and constant initial pressure, it will be seen that over a certain range, *mn* (Fig. 367), the variable expansion is

the more economical; but if the cut-off is carried beyond a certain point, *m*, the throttling method becomes the more economical of the two.

To find the mean pressure corresponding with the lowest steam-consumption per I.H.P., draw a tangent, *Oc*, to the curve of steam-consumption from the point O; then a vertical, *cd*, through the point of contact gives by its intersection with the horizontal base the mean pressure, *od*, required; that is, (*cd* ÷ *od*), or (steam-consumption ÷ I.H.P.), is a minimum when the power is represented by *od*.

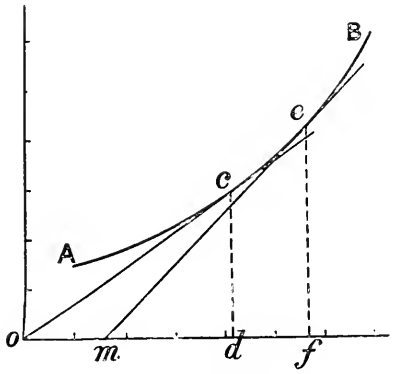

FIG. 369.

To find the mean pressure corresponding with the lowest steam-consumption per B.H.P., which is usually more important to know than that for the I.H.P.

Let AB (Fig. 369) be the curve of total steam-consumption for the engine, and let *Om* represent to the scale of mean pressure the pressure required to drive the engine itself.

From point *m* draw a tangent *me* to the curve; then *ef* is the most

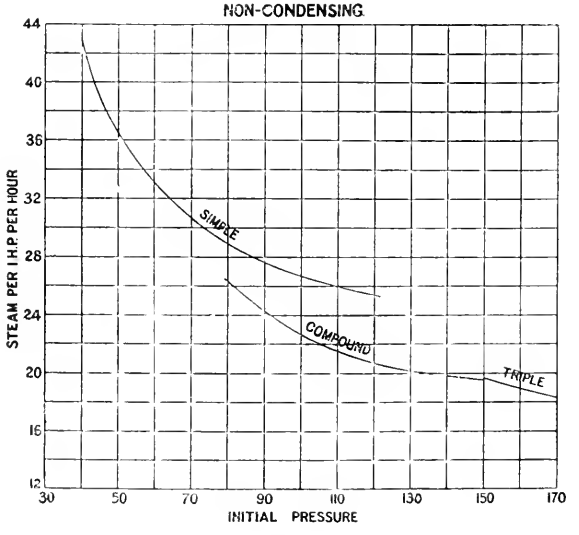

FIG. 370.

economical mean pressure to adopt when considered with reference to the brake or effective horse-power, while if only the indicated

horse-power had been considered, a lower mean pressure would have been chosen.

Such a diagram shows why, in electrical work, the rated mean effective pressure is always chosen high, namely, from 40 to 45 lbs. per square inch referred to the low-pressure piston, the reason being that when the most economical point is considered with reference to the effective horse-power, instead of the indicated horse-power, it is found possible to work economically at the higher mean pressures, and the advantage of doing so is that the same power may be obtained with a smaller engine, and therefore also one which may be run at higher rotational speeds.

In mill engines the rated mean effective pressure is usually about 28 lbs., but there is a tendency all round in the direction of raising the value of the rated mean pressure.

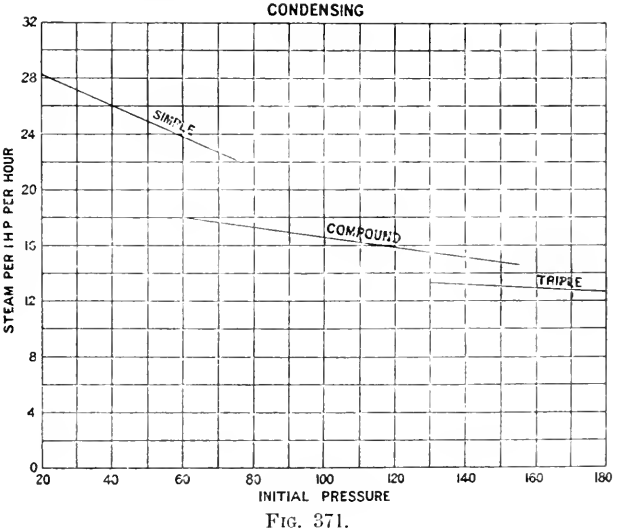

FIG. 371.

Curves of Steam-consumption per I.H.P. per Hour.—The effect on the rate of steam-consumption of various changes in the conditions of working may be best shown by plotting curves of engine performance as shown in Figs. 370 and 371. These figures show the relative performance of simple, compound, and triple engines, condensing and non-condensing, and they should be carefully studied by the student. The data for these curves have been taken from the Willans trials.[1]

Fig. 372 shows the characteristic curves of steam-consumption for engines of various types and various degrees of loading, the fractions along the base-line representing the proportion of the rated load at which the engine is worked. The *rated load* is the load at which the engine gives the best all-round results, the principal factor in the problem

[1] *Proc. Inst. C.E.*, vols. xciii. and cxiv.

being the maximum economical working load. Usually engines may be worked about 25 per cent. above this load as a maximum.

The *load-factor* is the ratio of the average working load to the maximum working load.

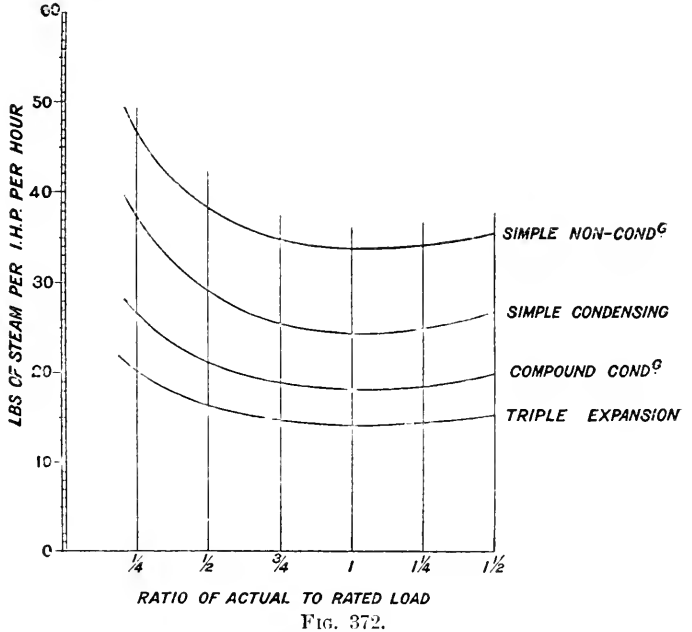

FIG. 372.

The following results of a series of trials with a Westinghouse compound short-stroke engine were given by Mr. Arthur Rigg.[1] The cylinder diameters were 14 in. and 24 in., with a 14-in. stroke; cranks opposite; revolutions 290 per minute; variable expansion governor.

WATER-CONSUMPTION PER BRAKE HORSE-POWER.

Condensing.

1	2	3	4	5	6
Brake H.P.	Average pressure, pounds per square inch.	Boiler-pressure, pounds per square inch.			
		120	100	80	60
		lbs.	lbs.	lbs	lbs.
200	50·0	19·62	22·53	—	—
160	40·0	18·86	20·02	23·17	—
130	32·0	18·38	19·56	21·32	24·30
100	25·0	19·14	19·44	20·34	20·10
70	17·5	19·80	20·05	21·43	22·57
40	10·0	22·90	23·12	24·75	22·55

[1] *Proc. Inst. C.E.*, vol. cxiv.

Non-condensing.

1	2	3	4	5	6
Brake H.P.	Average pressure, pounds per square inch.	Boiler pressure, pounds per square inch.			
		120	100	80	60
		lbs.	lbs.	lbs.	lbs.
200	50·0	23·94	—	—	—
160	40·0	23·50	25·20	—	—
130	32·0	24·32	26·42	27·70	—
100	25·0	25·57	27·75	29·80	—
90	23·0	26·51	28·30	29·80	31·70
70	17·5	29·40	30·77	32·48	36·00
40	10·0	40·05	39·30	42·75	45·82

From a paper [1] by Mr. Henry Davey, read before the Institution of Civil Engineers, the following average results of long-stroke engines using *saturated* steam are deduced—

	Initial pressure.	Ratio of expansion.	Steam per I.H.P. per hour.	B.T.U. per I.H.P. per min.
Single cylinder condensing ...	76·7	3·95	23·51	432
Compound condensing engines	84·3	7·73	18·53	358
Triple-expansion engines ...	138·3	14·51	14·88	288

Thermal efficiency of the triple-expansion engines = 42·42 ÷ 288 × 100 = 14·7 per cent.

Performance of Engines using Highly Superheated Steam.—The following steam-consumption is guaranteed by the Schmidt Stationary Engine Co., London, the temperature of the steam employed in all cases being 350° C., or 662° F.

Type of engines.	Indicated horse-power.	Pounds of feed-water per I.H.P. per hour.	B.T.U. per I.H.P. per min., feed temp. 100° F.
Single cylinder double-acting non-condensing	50 to 300	16·8 to 15·5	403 to 373
Single cylinder double-acting condensing	50 to 300	13·5 to 12·4	325 to 298
Compound double-acting condensing	50 to 800	11·5 to 9·8	277 to 236
Single crank single-acting tandem compound condensing	50 to 350	11 to 10	265 to 241

NOTE.—In each case the consumption of steam decreases as the power increases.

The **effect of speed of rotation** on economy is to somewhat reduce the weight of steam used per indicated horse-power per hour as the

[1] *Proc. Inst C.E.*, vol. cxxii p 17.

speed of rotation increases. This is probably due to the reduced loss by cylinder condensation at high speeds.

The following results are from experiments by P. W. Willans:[1]—

Revolutions per minute	...	401	301	198	116
Steam per I.H.P. per hour	...	17·3	17·6	18·9	20·0

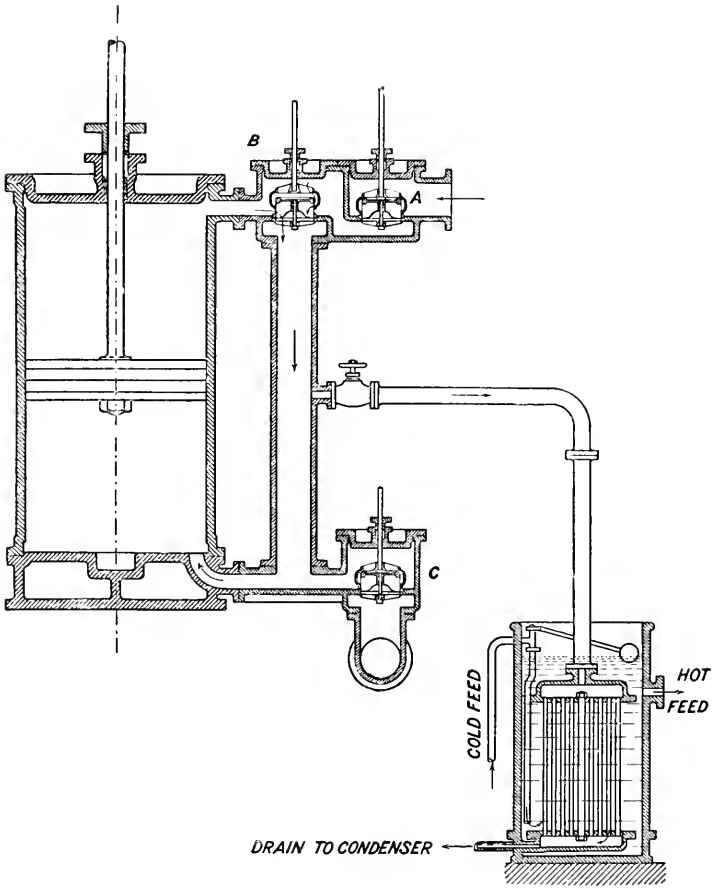

FIG. 373.

The Cornish Cycle.[2]—In the Cornish single-acting pumping-engine (see Fig. 373), the steam passes into the cylinder through valve A, and acts on the top of the piston to drive it downwards, valve B being

[1] *Proc. Inst. C.E.*, vol. cxiv.

[2] See a paper by Mr. Henry Davey on the Birmingham Waterworks, *Proc. Inst. Mechanical Engineers*, 1897, p. 297.

closed; the space below the piston being at the same time in communication with the condenser through the valve C.

At the end of the down-stroke the valve B opens to exhaust, and the valves A and C are closed. The steam now passes from above the piston to the space below the piston through the valve B, and not directly to the condenser.

The piston then ascends in a condition of equilibrium.

The reason for the economy obtained by this arrangement is that the clearance surface above the piston is never put in direct communication with the condenser, the range of temperature above the piston being from admission to release only, while below the piston the range of temperature is from release to exhaust, the fall of temperature from admission to exhaust thus occurring in two stages. This cycle is now adopted by some single-acting high-speed engine makers, notably in the Willans engine.

Economy Guarantees.—Considering that the steam used by an engine each year often costs as much as the initial cost of the engine itself; also that the difference in weight of steam consumed—and therefore of coal burned—in power plants by different makers, may be as great as 100 per cent., the importance of obtaining guarantees of steam economy will be very obvious.

It must be remembered, however, that the results of the trials of engines and boilers, when new from the hands of the makers, will not usually be repeated in ordinary working practice, owing unfortunately to the various sources of loss of efficiency which occur unless exceptional attention is paid to detail. It would be safe to allow a margin of at least 25 per cent. between the makers' tests and the actual working performance of the plant. This margin represents the sum of a large number of small but more or less preventible losses which occur in power plants, and the extent of the reduction of which is a measure of the intelligence and skill of the operating staff.

CHAPTER XXI.

TYPES OF STEAM-ENGINES—THE MILL ENGINE.

Horizontal and Vertical Engines.—The choice of type depends in some measure on the space at disposal in which the engine is to be fixed, and also on the speed of rotation desired.

Where floor space is limited, and height will permit, the vertical type is the only alternative; but where space is not so limited, the question of speed of rotation desired will more probably decide the type, for slow speeds the horizontal being generally preferred.

The horizontal type is more convenient of access, while the vertical is often most inconvenient in this respect. The stresses are spread over a larger floor area in the horizontal type, and the engine is therefore more likely to be free from vibration.

It is usually more difficult to keep vertical engines clean, because of leakage of water and oil from stuffing-box glands and other parts falling directly among the working parts.

Vertical engines are lighter for the same power, because they are made of a shorter stroke, and run at a higher rotational speed than horizontal engines.

In horizontal engines the cylinders are liable to wear down and to become oval in consequence of the weight of the piston wearing a bed for itself on the bottom of the cylinder. This objection is absent in vertical engines, though of course the weight is carried on the crank-pin instead. To reduce the wear in horizontal cylinders, the piston is sometimes supported by a tail-rod, which is a prolongation of the piston-rod carried out through the back cover.

With the long-stroke horizontal engine extreme care must be taken in the construction of the foundation, to ensure the prevention of uneven "settling down."

For engines of large power in electric light and traction stations the vertical type is now almost exclusively employed.

The Horizontal Mill Engine.—Figs. 374 and 382 give details for a horizontal trip-gear engine, 15-in. diameter, 36-in. stroke, suitable for a working pressure of 100 lbs.

The steam admission is affected by double-beat drop valves A, operated by a detachable trigger, the point of release being determined by the governor.

The exhaust valves B are of the double-beat type, worked by a cam on the side shaft C.

The cylinder is a cored casting of tough cast iron, which must be

free from blow-holes and other imperfections, and has suitable recesses into which the steam and exhaust valve seats are forced.

The steam is admitted by the side and at the centre of the cylinder, and passes up a belt to the steam-passage on the top of the cylinder, which again communicates with the steam-valves A at either end.

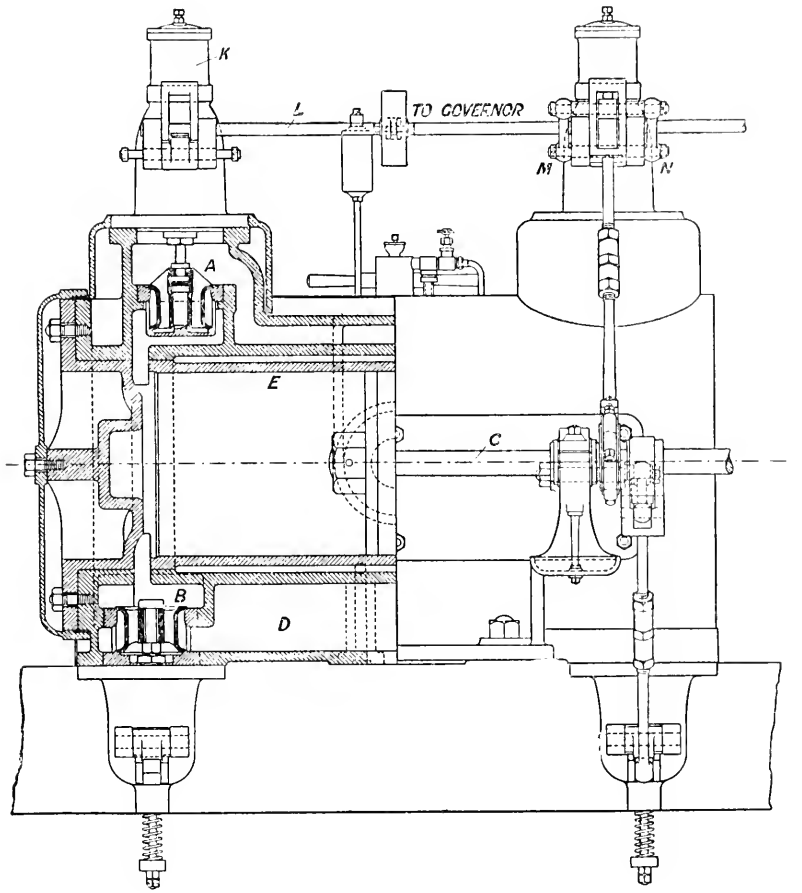

FIG. 374.

When the steam is exhausted from the cylinder it escapes into a cored chamber, D, common to both exhaust valves, and from thence to the exhaust pipe.

A separate working barrel or liner, E, is forced into the cylinder casing. The parallel part is $\frac{1}{16}$ in. larger at one end than at the other, to facilitate putting in and fixing of the barrel.

The valve seats and valves are cast off a specially strong hard mixture of cold-blast and hematite irons.

The upper and lower beats of valve faces are tangents to two spheres, which have their common centre in the point of suspension (see Fig. 376). The effect of this special arrangement of valve seats is to maintain true contact between valves and seats. When the valve

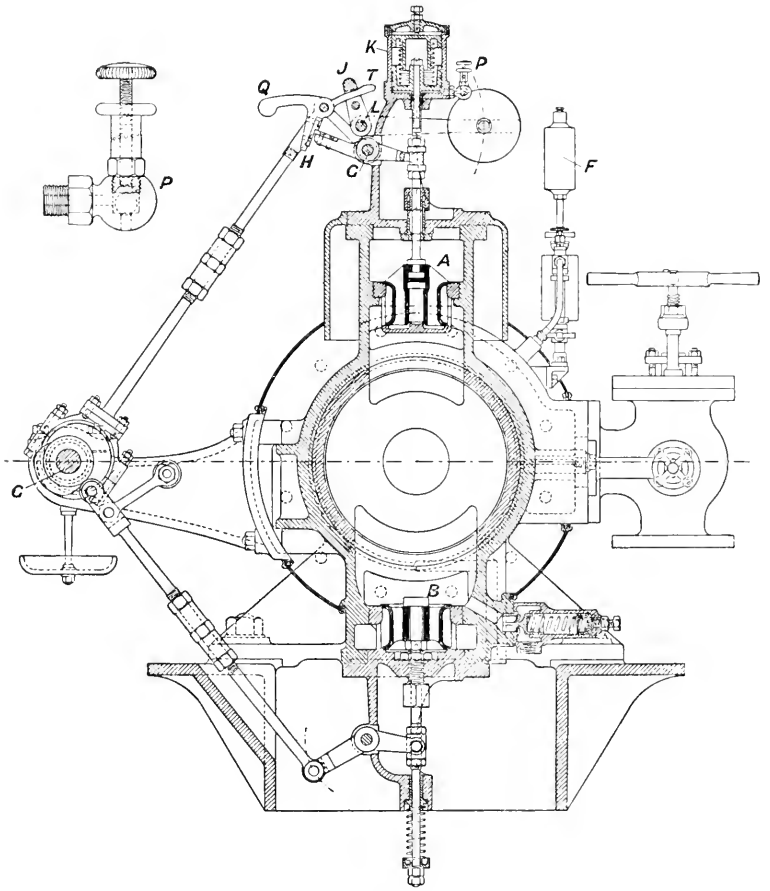

FIG. 375.

seats are both the same angle, the lower valve seat wears larger than the valve and causes leakage.

It is usual to finally grind the valve seats together when they have been heated, so as to make them steam-tight after they have been expanded by the hot steam. All castings have more or less internal stress in them as delivered from the foundry, and when

such castings are subjected to heat, they sometimes twist and go out of shape.

In small castings it is possible to get rid of the initial stress, by placing them in a furnace and heating them to a blood-red heat, closing the dampers and leaving the furnace and castings to slowly cool together.

Where castings cannot be so heated, it is very necessary to carefully examine and "let down" the wearing parts which are to be a working fit under steam pressure and temperature, and with more complicated valves, this must be done several times before the necessary steam-tightness is attained.

The steam-jacket is supplied with high-pressure steam by a small steam-valve placed alongside of the stop-valve, and the condensed water is drained through a passage (drilled at right angles) which connects the lowest point of the jacket to a suitable facing on the side of the exhaust passage on the underside of the cylinder.

The cylinder is automatically drained by the separate exhaust valves each exhaust stroke, and in order to prevent the danger of an excess of water under pressure trapped between piston and cover when the exhaust valves have closed, relief valves are fitted to each end of the cylinder.

A sight-feed lubricator, F, is provided, and connected to the steam-supply passage.

The cylinder is coated with a fibrous non-conductor, such as asbestos or slag wool, and cased in sheet steel secured by screws fitting under the cylinder cover and stuffing box as shown.

The cylinder cover is a strongly ribbed casting, having proper recess for piston nut and giving $\frac{3}{16}$ in. clearance. A polished cover is fitted, which forms an efficient air-jacket and helps to keep the lagging in place.

The lifting lever of the steam-valve is fitted with a hardened-steel tip, which is engaged by the trigger-piece H, provided with similar hardened-steel tip. The maximum amount of contact is $\frac{3}{16}$ in., and is determined by an extending tail, T, which limits the extent of engagement.

The motion to lift the steam-valve is derived from an eccentric mounted on a side shaft, C, driven by bevil gears from the crank-shaft. The upper end of the eccentric-rod is connected by two side links, MN, to the lifting lever-pin (see Fig. 374), and when the trigger is engaged, the lifting-lever, trigger, and side links form a locked triangle. The upper portion of the trigger is curved towards the buffer-box K, and rides under a detaching pad, which is formed on the detaching lever J, keyed on the cut-off spindle L.

The cut-off spindle is arranged to give the lever J a movement approximately the same in direction as the tail of the trigger T, and the inclined tail runs under the detaching pad and detaches the trigger from the valve-lifting lever.

In all mechanical cut-off gears it is of the highest importance for the governor to regulate the point of cut-off with the smallest possible

resistance to its movement from the gear itself, and it should be free to adjust its position during steam admission. The above arrangement is a good example of a detaching-valve gear, suitable for governing on a low percentage of variation.

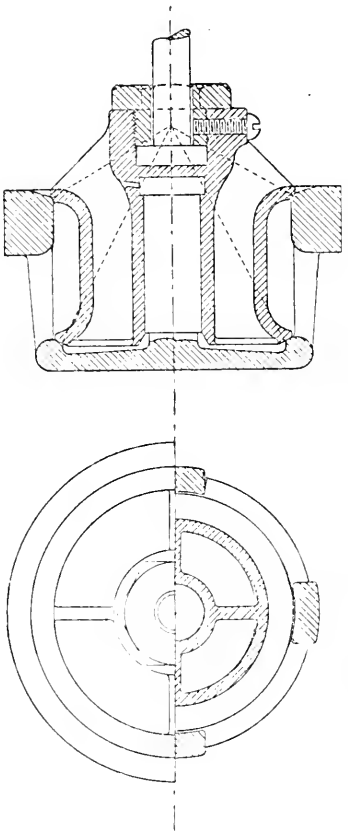

Fig. 376.

The steam-valve spindle is extended beyond the lever attachment, and is connected to a piston having turned Ramsbottom grooves (not rings) fitting in an air-buffer box. The piston has about $\frac{1}{32}$ in. clearance when the valve is seated. When the valve is lifted the piston draws in air freely through the ball-valve P (shown enlarged, Fig. 375), and when the valve is released the ball seats itself, and the air is forced out through the holes (regulated in area by the fine screw) in the upper part of the air-valve.

A spring is provided to supplement the rush of the steam and ensure the prompt closing of the valve when the lever is released.

By suitably regulating the air-valve, the valve can be made to seat itself rapidly and without noise.

An extension-piece, Q, is made on the trigger to overbalance the other portions of the trigger and ensure engagement with the lever.

A double bearing is placed on the side of the cylinder to carry the side shaft C driving the valve gear.

Two cams are used to open the exhaust-valves B, and the springs fitted to the extension of the exhaust-valve spindles ensure the valves returning to their seats when the cams release.

The separation of the steam and the exhaust valves possesses many advantages; it lends itself to the perfect adjustment of the steam-cycle, the exhaust valve opening and closing being no longer inter-dependent as in the ordinary slide-valve, but the compression and exhaust opening can be regulated independently of each other.

Adjustments are provided in the steam and exhaust valve coupling-rods and also in the valve spindles, which enable the lead and cut-off to be varied, and the exhaust valve to be slightly adjusted.

A lever and weight is placed on the cut-off spindle L to ensure

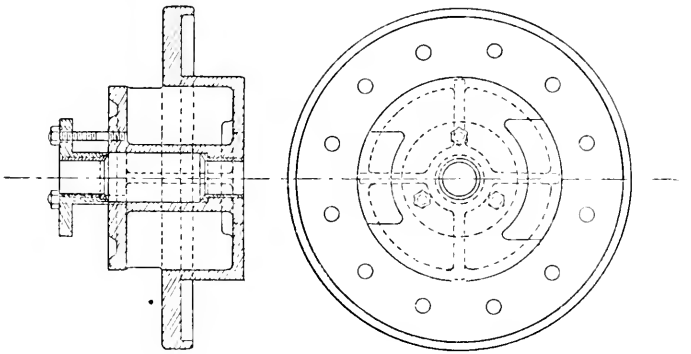

FIG. 377.

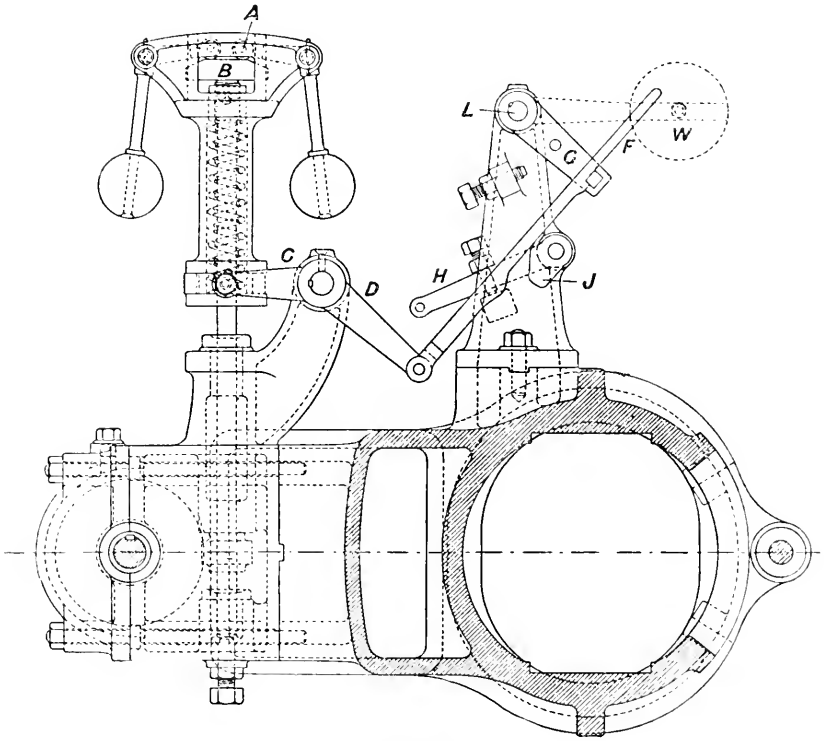

FIG. 378.

the trip being held out of action in the event of any accident happening to the governor or driving-gear, or when the safety device to stop the engine is operated.

The cylinder is securely seated on two planed sole-plates let down on either side of the pit in which the exhaust valves work.

Figs. 378 and 379 show an inverted arrangement of the Hartnell spring governor. The bell-cranks carrying the governor-balls are fitted with rollers, A, in the ends of the short arms, and push on the T-headed governor spindle B. The centrifugal force of the governor-balls has to overcome the spring resistance plus the dead weight of

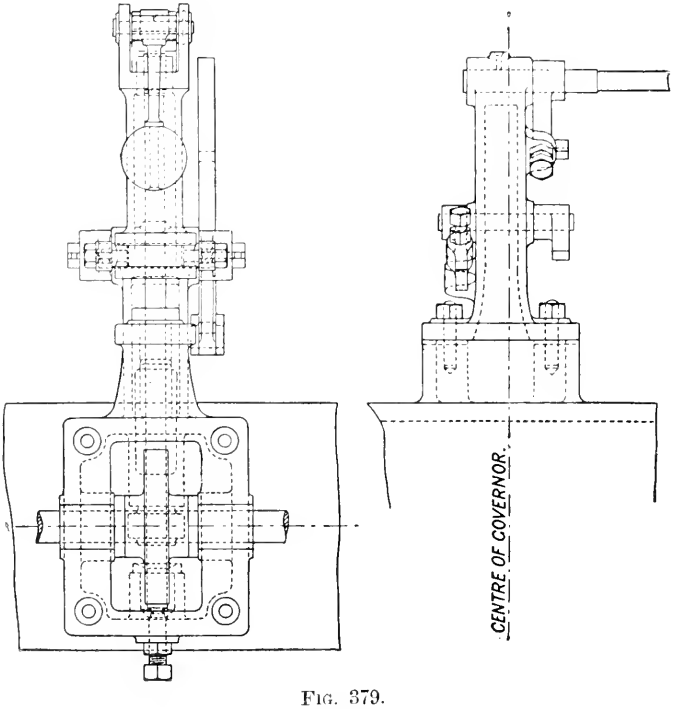

FIG. 379.

the complete head, which includes the box surrounding the spring and the double-ended bracket carrying the centres of the ball arms. A heavier governor is obtained by this arrangement than the simple spring Hartnell governor, which is liable to hunt when working on a fine variation.

The added dead weight of the inverted head tends to check the inter-revolution variation of the governor due to the varying angular velocity arising from irregular turning effort on the crank-pin.

The governor spindle is of steel, and is hardened at the bottom where it rests on an adjustable toe-piece, also hardened.

The governor is driven by skew-gearing, the driving wheel of which is keyed on the side shaft.

The gearing is cased in and flooded with oil, so that constant lubrication is ensured.

A cast-iron die-piece is held by set screws between the side levers, and the governor motion is transmitted therefrom to the cut-off gear.

The communicating mechanism between the lifting levers C and D and the cut-off spindle L is arranged so that the valve gear is disconnected from the governor in the event of an accident happening to the governor, or of its being inoperative.

When the governor falls below its normal working position, the notch in the catch-link

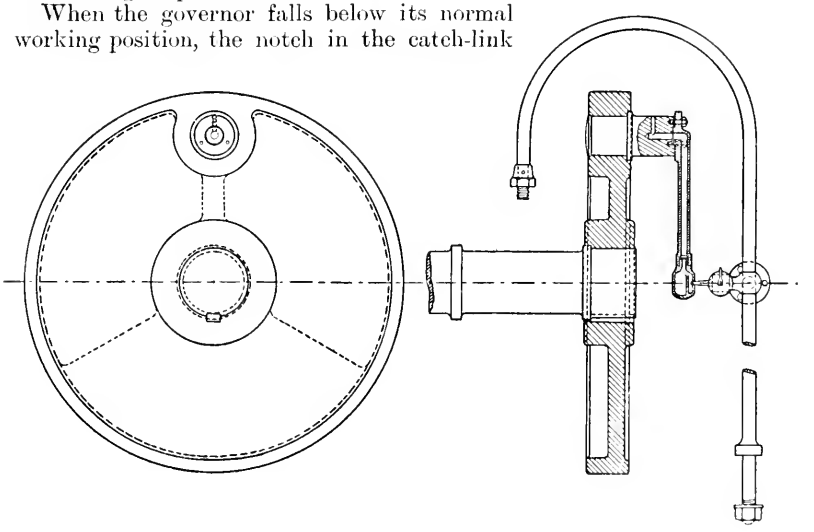

Fig. 380.

F comes into contact with the small inclined lever G and moves the detaching lever so that the trigger cannot engage the trip lever, and the engine is stopped.

Another lever, H, is also provided, to the end of which a cord is attached, which is connected electrically or otherwise to the various floors of the mill. In the event of urgent necessity arising to immediately stop the engine, the lever H is raised, and the small knock-out lever J lifts the catch-link F, the weight falls, and the engine stops.

Fig. 377 shows the piston-rod stuffing-box. It is arranged with the front flange fitting into a bored portion of the bed, the flange being bolted up to the end of the bed, thereby forming an efficient air-jacket for the front end of the cylinder. The stuffing-box is fitted

with a long neck bush of brass, and the gland is also brass bushed. The edge of the flange projects over the cylinder and holds the lagging in place.

Figs. 323 and 324 show the girder bed for the same engine, which is cored out and planed to receive the cross-head. The flange is faced for attachment to the cylinder. Suitable facings are also provided to receive the side shaft and governor brackets.

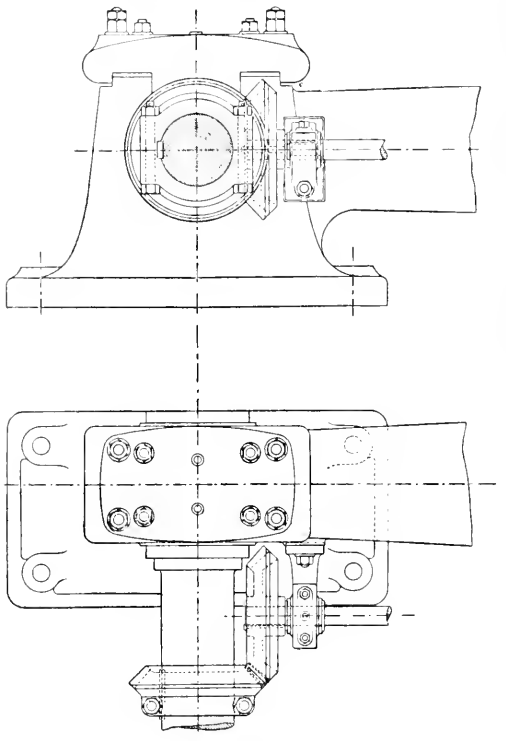

Fig. 381.

A large cast-iron oil receiver is sunk into the ground to catch all oil from main bearings and crank disc when standing.

Bosses and facings are provided to receive the handrail and pillar.

Fig 380 shows a cast-iron disc crank which is forced on shaft, and into which the crank-pin is also forced and afterwards riveted over. The crank-pin is oiled from a visible drop lubricator, carried by a column by means of a centrifugal oiler. The oil is applied in the centre line of the shaft, and flows outwards to the surface of the pin through the pipe by centrifugal force.

The ball which receives the oil is divided at the centre, so that if the crank stops on its top centre the oil will be retained in the cavity behind the rib, and not run out on the floor.

Fig. 298 shows a piston, with studded junk plate designed for this engine.

The studs have a collar, which is let into a recess, and a small pin driven into the side to prevent it turning.

The piston block is coned on a swelled end on piston-rod with a 1-in-8 taper.

The rings are of L section, and the spring is of the usual plain coil type.

Fig. 381 shows the arrangement of side shaft driving in conjunction with main girder.

The remaining details for the same engine may be completed from the examples given in the previous chapter on Engine Details.

Proell Valve Gear.—Fig. 382 represents a section of a cylinder fitted with the Proell valve gear, as made by Messrs. Marshall of Gainsborough. The gear consists of two equilibrium admission valves, A, one to each end of the cylinder. These are alternately

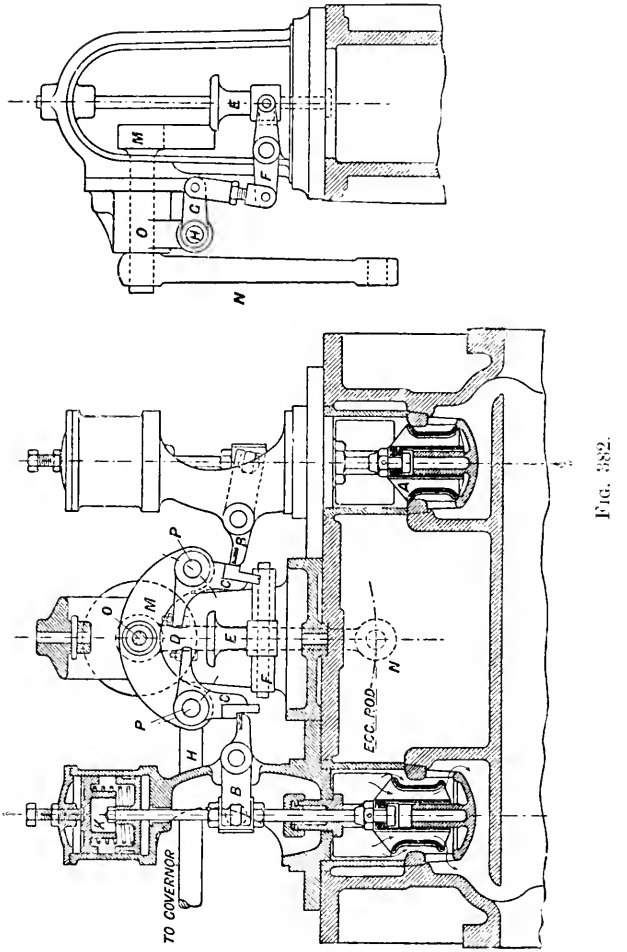

FIG. 382.

lifted by means of the valve spindles, which are each connected with trip levers, B. The trip levers are depressed by means of the bell-crank levers C, which hang on pins, PP, on opposite ends of the rocking-lever M. This rocking-lever is keyed to the same spindle, O, as the lever N, which is driven by the eccentric.

The ends D of the bell-crank levers, projecting inwards towards the centre, are brought into contact at each stroke with the trip pad E. The trip pad is connected with the governor through the medium of the levers F and G and the shaft H, and the height of the trip pad determines the moment of cut-off of the steam, for as soon as the end D of the bell-crank lever reaches the trip pad, any further movement of the rocking-lever disengages the bell-crank lever from the trip lever B, and the valve immediately closes. The closing speed of the valve can be very readily regulated by means of the spring K, which causes the valve to close rapidly and quietly. The Proell governor to work with this gear has already been described on p. 217.

CHAPTER XXII.

THE CORLISS ENGINE.

This engine was the invention of the American engineer Geo. H. Corliss, and first appeared in 1850. It has been much used since, especially for the larger sizes of high-class mill engines in all countries, and very generally for ordinary mills and factories in America.

The Corliss valve gear possesses the following important advantages :—

1. Reduced clearance volume and clearance surface, owing to the shortness of the admission and exhaust passages obtained by placing the valves close to the ends of the cylinders. In such cylinders the clearance will vary from 3 to 5 per cent. of the piston displacement.

2. Separate valves are used for steam and exhaust, the steam-valves being at the top corners of horizontal cylinders and the exhaust valves at the bottom corners, by which means, during the flow of the steam from the cylinder, the exhaust surfaces are swept clear of water and a natural system of drainage is thus provided. This advantage applies more especially to horizontal cylinders.

3. It maintains a wide opening during admission of steam with a sudden return of the valve at cut-off, thus preventing wire drawing of the steam during admission.

4. It permits of independent adjustment of admission and cut-off, release and compression.

5. It provides an easy and effective method of governing engines of large power, by regulation of the cut-off, through the action of a governor on the comparatively light working parts of the valve disengaging gear.

It is frequently claimed for the employment of separate steam and exhaust valves that condensation is reduced because the entering steam coming through a separate passage, and not through that through which the steam is exhausted, does not come into contact with surfaces which have just been cooled down by the comparatively cold exhaust steam, as is the case when the port is common to both admission and exhaust; but this claim is only valid if the area of clearance surface is reduced by the arrangement of separate valves, because in any case, all the surface up to the exhaust valve must be heated up each stroke whether the steam is admitted through the same or through a separate port. One important objection to the Corliss valve gear is the limitation of the speed of rotation of engines fitted with it owing to its action being dependent upon the engagement and tripping of catches.

About 150 revolutions per minute is probably nearly the limit of speed (though speeds as high as 240 revolutions per minute are known in America). To avoid this limitation, the valve gear is now made for high

rotational speeds without the trip-gear, the connection between the wrist-plate and the steam-admission valve being direct, and the regulation of the cut-off being obtained by varying the travel of the wrist-plate motion through a governor and link.

Fig. 383 is an illustration of the general arrangement of a Corliss engine with a single eccentric for both admission and exhaust valves.

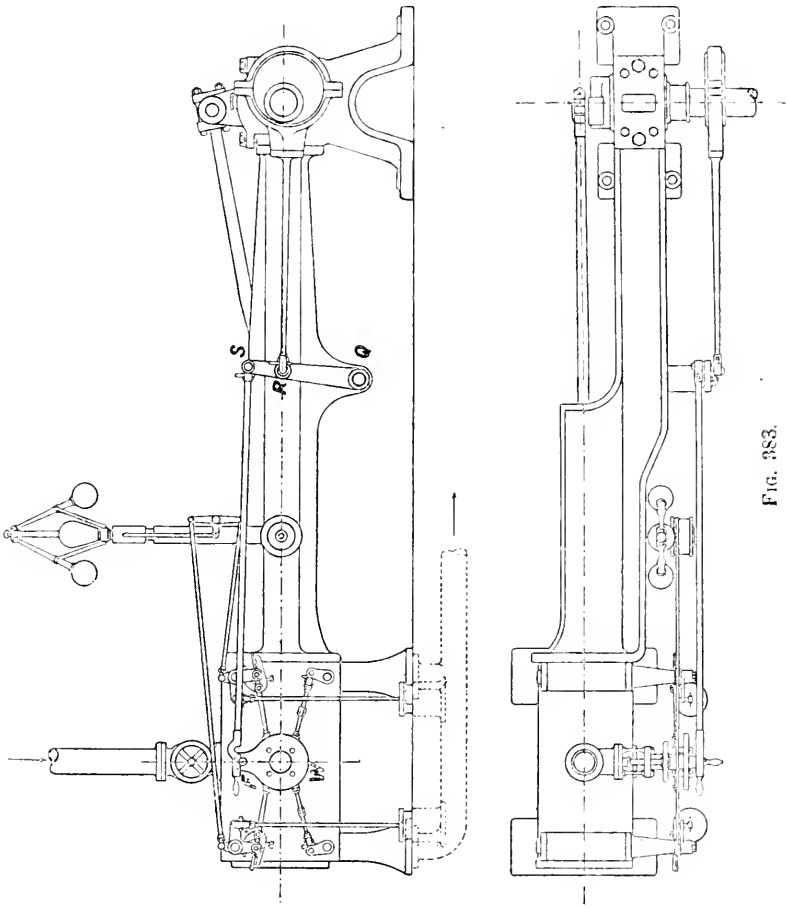

Fig. 383.

Fig. 384 shows in skeleton the arrangement of levers by which the valves are driven. Motion is obtained in the first place from an eccentric on the crank-shaft which is connected by its rod to a vertical rocker-arm, QRS. Attached to the rocker-arm is the hook rod or lever FS which drives the wrist-plate W, and causes it to oscillate about its centre of motion O.

Attached to the wrist-plate are four valve rods, two marked BB,

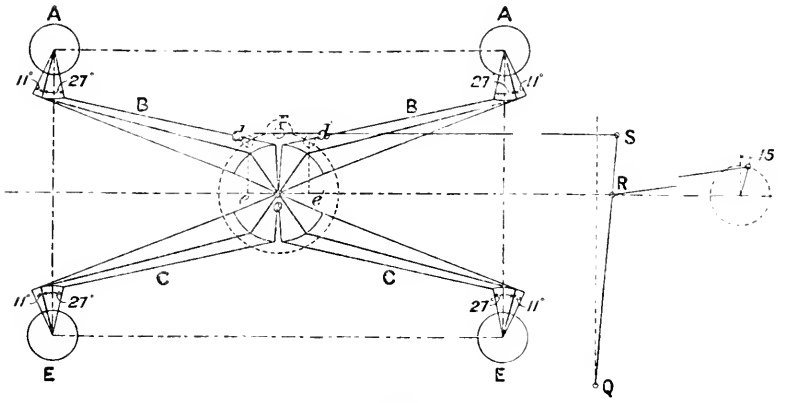

FIG. 384.

attached to the two upper or steam-admission valves AA, and two marked CC, to the two lower or exhaust valves EE. The valve rods and levers are shown in three positions—in the middle, and at the two ends of their stroke.

The exhaust-valve rods are connected directly to the exhaust-valve spindles, but the admission-valve rods work loosely on the bosses of the valve-stem brackets. These levers engage the admission valve by means of a trip or catch, and the steam-port is thereby opened during the first portion of the piston path, after which the trip disengages the lever and the valve suddenly closes the port by means of the weight or spring of the dash-pot plunger.

The admission valve remains closed and at rest during the remainder of the stroke, also during the return or exhaust stroke, until it is again engaged by the catch so as to move the valve in time for the new stroke of the piston.

Fig. 385 is a longitudinal and sectional view of a Corliss steam valve.

Fig. 386 illustrates the trip-gear as used on the early Corliss engines, and as still used by many American engineers, and which is known as the "crab-claw gear."

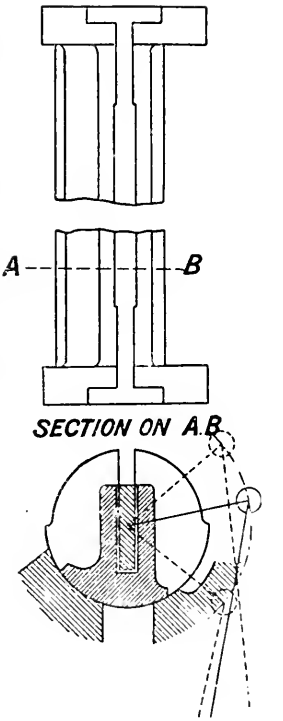

FIG. 385.

The valve-rod B (Fig. 386) is driven from the wrist-plate. The bell-crank lever AA is securely attached to the valve spindle C. A square-headed bolt D, with a hole through the square head, is attached to the lower lever of the bell-crank A. The valve-rod B passes freely through the hole in the pivoted nut D. To the rod B a fork EE is pinned at F, and the lower limb of the fork is kept up to its work by a spring G as shown. A steel plate H is fixed in the upper face of the lower limb of EE, by which it catches the sleeve D of the lever A.

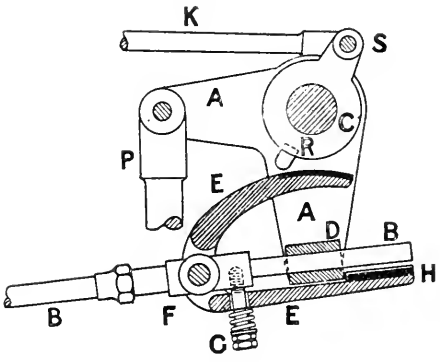

FIG. 386.

When the catch H and sleeve D are engaged, as shown in Fig. 386, then the movement of the valve-rod B to the left pulls also the bell-crank lever AA, and turns the valve on its spindle C, so as to open the steam-admission port. Cut-off at any required point is obtained by means of a disengagement of the catch H which liberates the bell-crank lever, and the valve is suddenly closed by the pull of the lever P.

Disengagement of the catch is effected by means of a projecting pin, R, on a separate lever, S, which rides loose on the valve spindle C, and which is connected to the governor by the rod K.

At a given speed the position of the projecting pin R remains constant, and as the lever A is pulled by the catch H towards the left, the curved upper limb of the lever EE comes into contact with the pin R and is depressed, and the catch H is disengaged from D.

The valve spindles are rectangular where they pass through the valves (Fig. 385). The valves may thus be easily twisted as required, and at the same time be free to move outwards relatively to the spindle as wear takes place.

Fig. 387 shows an arrangement of Corliss valves for a vertical engine. S, S are the steam-admission valves, and E, E are the exhaust valves. The steam enters the cylinder through the port *a*, and leaves the cylinder through the opening *b*, when the exhaust valve uncovers the exhaust port *c*. The valves are here shown for mid-position of the eccentric, that is, the exhaust valves are just about to open or to close their respective ports, and the steam-admission valves overlap the ports, the amount of overlap in this position being the true "lap" of the valve as in the ordinary slide-valve. In addition to this lap, the valve, when liberated by the trip gear, swings further and covers the port by an amount greater than the lap, as shown by the dotted positions in the figure. This additional movement is called the "seal" of the valve, or the "dwelling angle."

To set the Valves of a Corliss Engine.—Usually marks are placed on the ends of the valves and on the valve-box, showing the relative positions of the working edge of the valve and of the port. Thus in Fig. 387, 2 is the working edge of the steam-valve and 3 of the steam-port; also 4 is the working edge of the exhaust valve and 5 the working edge of the exhaust port. A centre line is drawn on the boss of the wrist-plate, and three lines are drawn on the periphery of the wrist-plate support, corresponding with the middle and two end positions of the wrist-plate centre line (see Fig. 390).

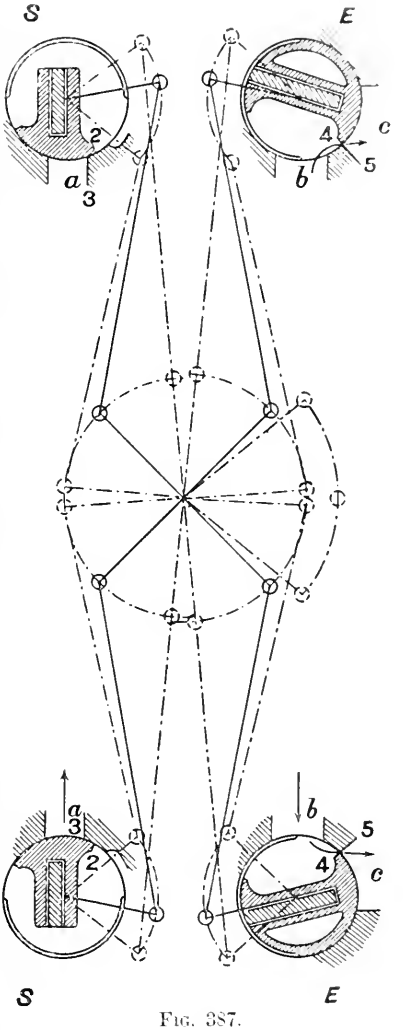

Fig. 387.

First the wrist-plate is set in its middle position with its centre line vertical. The steam-valves are then set so that they each have the required amount of lap. In the Fig. 387, the amount by which the edge 2 of the valve overlaps the edge 3 of the port when the wrist-plate is in mid position, is the lap of the valve.

The amount of lap given depends upon the size of the engine, and may vary from $\frac{1}{8}$ in. to $\frac{1}{4}$ in. in small engines, to $\frac{5}{8}$ in. or more in larger engines.

The amount of lap can be varied by shortening or lengthening the valve rods by means of the adjustable nuts on the valve rods.

Similarly, when the wrist-plate is in mid position, the exhaust valve edges 4 are adjusted equally in both exhaust valves to the exhaust-port edges 5. When the exhaust valves have no lap, as is often the case, then the edges 4 and 5 coincide for both the exhaust valves when the wrist-plate is in mid position.

The rocker arm—to which the eccentric rod and wrist-plate lever are attached—stands vertical for horizontal engines (see QRS, Fig. 383), or horizontal for vertical engines, when the wrist-plate is in mid position.

Fig. 388 gives a wrist-plate diagram. OD and OB show the extreme positions of the levers, and OC mid position. This is a case in which a double reversal of stress takes place in the levers and pins during each forward and backward stroke of the wrist-plate. This is shown by the passing of the levers AB and OB outside the dotted line joining the centre O of the wrist-plate, and drawn tangent to the valve-lever arc, thus reversing the angle between the radius of the wrist-plate and the valve-rod. This is an objectionable arrangement, and should be avoided where possible.

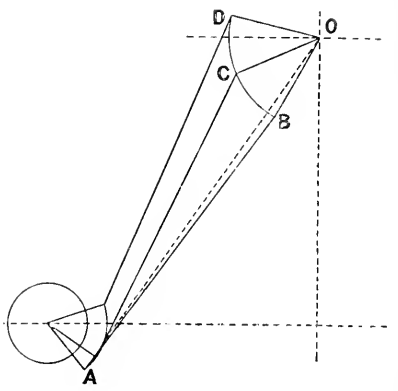

Fig. 388.

Setting of the Eccentric, for a single eccentric and one wrist-plate working both admission and exhaust valves. If the steam-valves and the exhaust valves have no lead, that is, admission and release take place at end of the stroke, and there is no compression, then the eccentric is set at right angles to the crank and it has zero angular advance. In this case the latest point of cut-off possible is at half-stroke of the piston, because the eccentric controls the valve during 90° rotation of the shaft as a maximum, past the point of opening of the valve. At or before the end of the valve stroke the trip gear, which is worked by the governor, liberates the valve, which suddenly closes and cuts off the steam-supply. The trip gear can only act during the movement of the gear through some portion of this angle. In order to obtain lead of the valve, an early release, and moderate compression, the eccentric is given angular advance. This still further reduces the number of degrees during which the eccentric has control of the valve, and the maximum point of cut-off is at some point earlier than half-stroke.

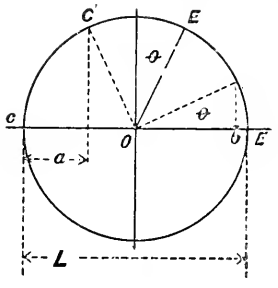

Fig. 389.

Thus, if the eccentric, Fig. 389, is set with an angular advance θ, then the eccentric is at E when the crank is at C.

When the crank has moved through an angle COC', the eccentric has reached E', the position of maximum opening of the valve, and the trip gear must have acted at or before this point. Hence crank position C', that is, cut off at $\frac{a}{L}$ of the stroke, represents the latest point of cut-off possible with this arrangement.

If the valve lever were connected to the wrist-plate without any

trip gear, then the valve would gradually return and the port be closed when the piston is at some point, *b*, near the end of the stroke as with an ordinary slide-valve without lap, but in that case the special feature of the Corliss gear would disappear, as it was designed to provide an efficient means of obtaining a range of early cut-off points to secure economical expansion of the steam in the cylinder.

If a larger range of expansion is required than that provided as above, it is possible to secure it by the use of two eccentrics and a

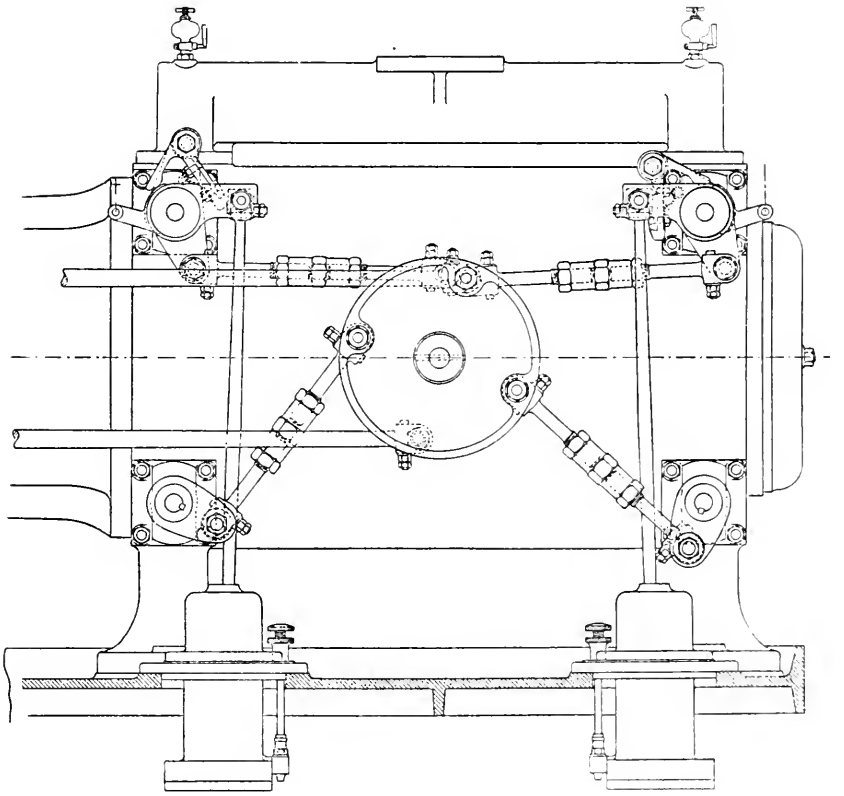

FIG. 390.

double wrist-plate: one for the admission valves and the other for the exhaust valves, as shown in Figs. 390 *et seq.*

Considering further the case of the single eccentric, from Fig. 384, it will be seen that the wrist-plate pin, F, travels through an arc *dd'* about its centre *o*, this angle being bisected by the vertical centre line through *o*. If vertical lines be projected from points *dd'* to the horizontal centre line through *o*, and cutting it at *ee'* respectively,

then ee' is the diameter of the virtual or equivalent eccentric giving the movement dd' to the wrist-pin, and the throw of the actual eccentric $= ee' \times \frac{QR}{QS}$

The movement at the edge of the valve, for a given angular movement of the valve lever, is measured on the valve circumference.

An important point to notice is the means which the wrist-plate

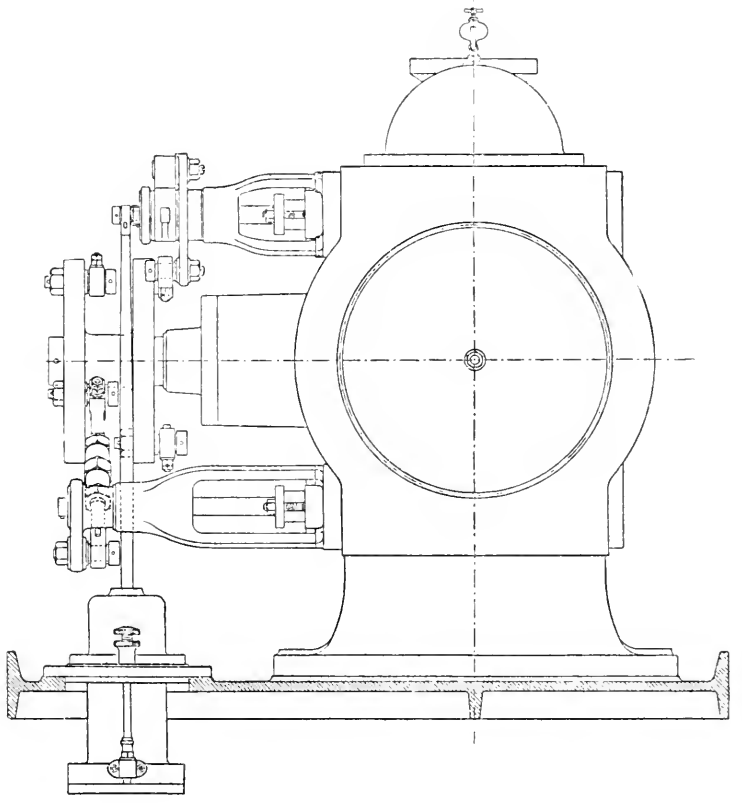

FIG. 391.

provides for giving the valve small movements when closed, and large, and therefore quick, movements when the port is open. This reduces the power required to drive the valve gear to a minimum. Thus, in the example, Fig. 384, during the movement of the wrist-plate through the first and second half of its total arc, the steam-admission valve moved through 11° and 27° respectively, and the exhaust valve 11° and 27° respectively. For ordinary engines of

the type illustrated in Fig. 383, the angular advance of the eccentric is made about 15°.

The diameter of the valve = $\frac{1}{4}$ diameter of cylinder. The length of the steam-admission port = diameter of cylinder, and the width of the port, as for all ordinary engines of the slide-valve type, =

$$\frac{\text{area of piston in square feet} \times \text{piston speed in feet per minute}}{6000 \times \text{length of port in feet}}$$

The width of the exhaust port is made about $1\frac{1}{2}$ times that of the admission port.

Figs. 390 to 393 show Corliss cylinders in elevation and section

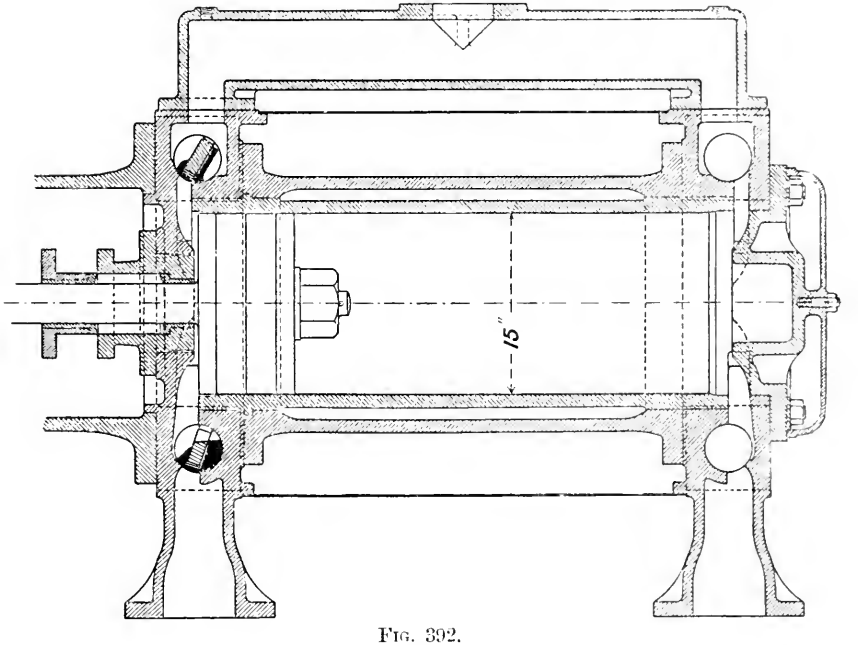

FIG. 392.

for a 15 in. × 28 in. × 36 in. cross-coupled compound engine, main bearings 9 in. × 16 in., running at 105 revolutions per minute, developing 340 I.H.P. as a regular load, and 425 I.H.P. with an overload, 160 lbs. boiler pressure, 26 in. vacuum.

Figs. 392 and 393 are longitudinal and transverse sections of the high-pressure cylinder; the low-pressure cylinder is of similar design, but of larger diameter, and is not shown.

The Corliss valve gear, shown in Figs. 390 and 391, has a double wrist-plate, one for operating the steam-valves and one for the exhaust valves. This arrangement allows the steam to be admitted with a suitable lead, and it provides a range of cut-off which may be

varied from 0 to $\frac{5}{8}$ of the stroke. It also enables the compression to be adjusted to the varied requirements of the speed and load of the engine without interfering with the steam-admission arrangements.

We have already seen that with the ordinary single wrist-plate gear, driven by one eccentric, when we have a small amount of lead and moderate compression, the point of cut-off cannot be later than about $\frac{1}{3}$ of the stroke. But for smartly handling considerable changes of load with minimum change of speed, the ordinary single eccentric gear is not so good as the double wrist-plate gear.

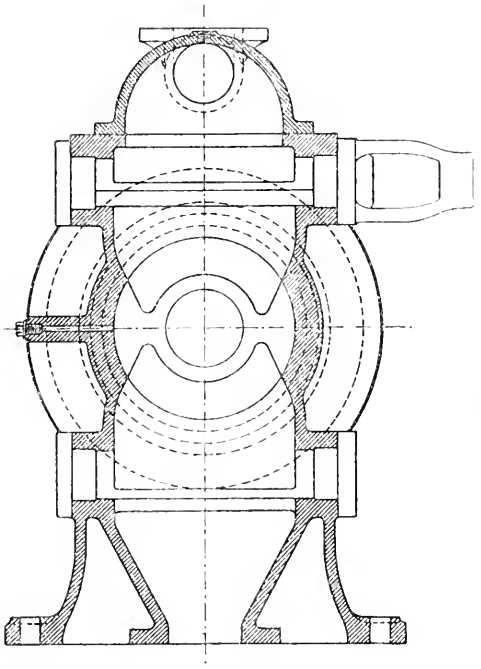

Fig. 393.

In the latest examples of Corliss engines for central-power stations, double wrist-plates are used on both high- and low-pressure cylinders, and the cut-off in both cylinders is regulated by the governor. By cutting off early in the low-pressure cylinder at light loads, as well as in the high, and by having a large receiver volume, the pressure in the receiver may be maintained practically constant and kept fairly high, by which means this storehouse of steam is instantly available for duty in the low-pressure cylinder to promptly take up any large increment of load that may occur at any moment, without any serious change of speed; whereas, in an ordinary engine with a small receiver and a cut-off on the high-pressure cylinder only, the steam in reserve for the low-pressure cylinder is practically nothing at light loads, and time would elapse before the low-pressure cylinder could help to deal with a sudden increase of load, and this would necessarily result in the mean time in considerable falling off of speed.

Details of Trip Motion (Fig. 394).—The trip arrangement consists essentially of four pieces: (1) the valve-driving lever A, keyed direct to the valve spindle C, and which carries a hardened steel block, B, on which the trip catch D engages; (2) the double-armed driving-lever EE receiving motion from the wrist-plate through rod J, and mounted loosely on the overhanging wrought-iron tube in valve

bracket, and which has a stud in the upper boss carrying (3) the hanging trip catch DD. The trip catch is arranged to fall in its place by gravity when the lever EE, on which it is mounted, moves into its extreme forward (anti-clockwise) position, and on the return (clockwise) stroke of the lever the catch then engages with the hardened steel block B on the valve-driving lever A, the effect of which is to move the valve on its own axis, C, and open the steam-admission port.

The catch is liberated by coming into contact with a detaching cam (4), marked F, which is formed on a ring working loose on the boss of the driving-lever, and having an extended arm, which is attached by a rod K to the governor. The upper arm of the trip catch DD is shaped to a suitable angle, and slides up against the detaching cam, F, by which means the hardened edge D of the catch is disengaged from the block B, the valve spindle is liberated, and the valve is immediately returned by the pull of the dash-pot lever M to its position of rest, closing and overlapping the steam-port.

A supplementary spring, H, is placed behind the trip catch to assist gravity and to make engagement certain. The governing cam is moved as required by the governor through rod K, and it varies the point of cut-off by varying the position of the point of contact F from zero to the maximum capacity of the gear.

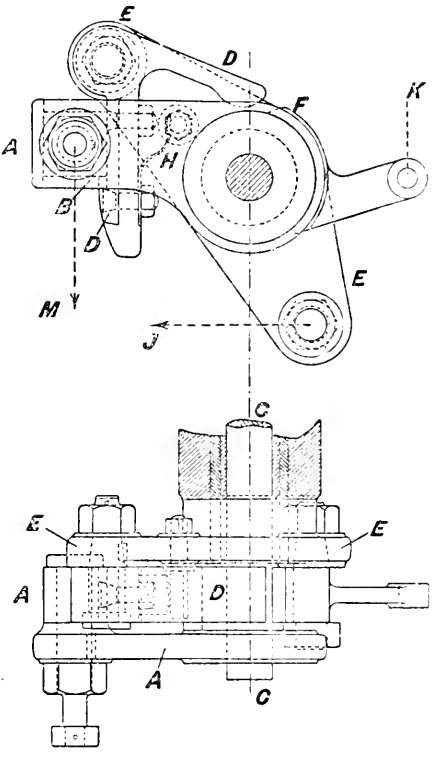

FIG. 394.

The period of impact of the detaching mechanism is very short, and a moderately powerful governor is unaffected by it. The governor is free to move during the admission of steam, and can be made extremely sensitive, say within 1 per cent. variation.

The Dash-pot.—The function of the dash-pot is to return the steam-valve quickly and noiselessly when the governor releases the trip catch. The dash-pot piston is sometimes pressed down by atmospheric pressure, a vacuum being formed under the piston as it is

raised by the valve-gear during steam admission. The dash-pot (Fig. 395) is controlled by a spring in preference to depending on vacuum. The speed of closing can be accelerated or retarded by regulating the air-escape plug A, which gives a less or greater compression of air as the escape plug is opened or closed.

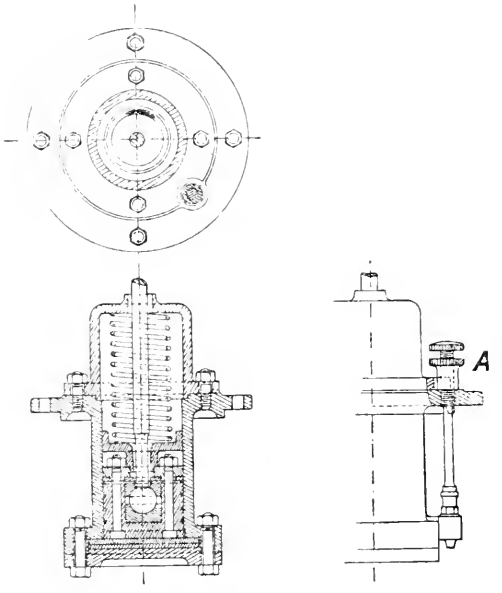

FIG. 395.—DASH-POT DETAILS.

The lower cover of the dash-pot holds in place two pieces of leather which form a pad or buffer, and finally bring the valve and dash-pot piston to rest.

The ball-joint is provided so that the connection between the pin in the steam-valve lever and the dash-pot piston can adjust itself to the line of least resistance, that is, the line of least friction.

Fig. 396 shows an enlarged view of the air-escape plug. The details of the other parts of the gear explain themselves.

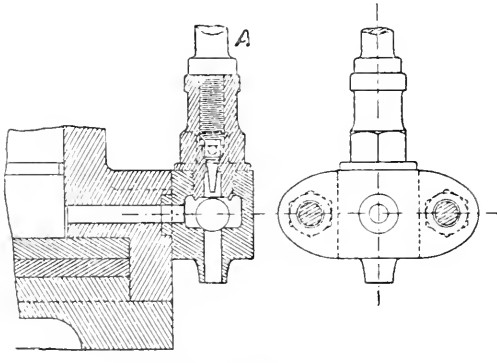

FIG. 396.—DASH-POT DETAILS.

Diagram of Steam-valve Movements. — Fig. 397 shows a geometrical analysis of the movements of the steam-admission valve gear. Arcs A, B, C, and D represent respectively clearance movement of valve lever to effect engagement of trip with valve lever, steam-lap, lead, and admission.

The point of cut-off is determined by the governor, and the maximum is made as great as is consistent with the certain disengagement of the trip. The relation of crank-pin to eccentric is seen by following the successive positions of the periods A, B, C, and D from the valve-lever, through the top and

bottom pins of the wrist-plate, to the circle of the eccentric path.

It will be seen that the eccentric has negative angular advance θ, that is, the eccentric has not moved through 90° from its extreme position when the crank is on the dead centre, but through an angle θ less than 90°.

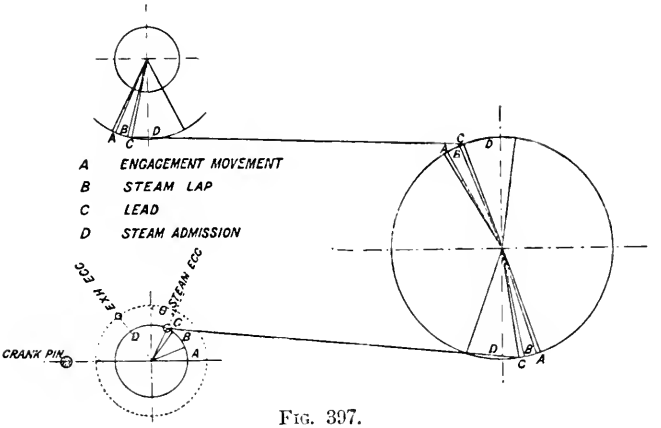

FIG. 397.

Diagram of Exhaust-valve Movements.—The theoretical indicator diagram, Fig. 398, is first drawn to decide upon the points of release and compression, and the respective position of these points is projected to the crank-pin circle below the indicator diagram.

Radial lines are drawn showing the crank positions at release and compression, that is, when the exhaust port opens and closes. If the angle between these crank positions be bisected, the crank position is obtained at which the exhaust valve is at the extreme end of its travel ; in other words, this is the crank position when the eccentric is on the dead centre, or *vice versâ* it is the eccentric position when the crank is on the dead centre, and thus the relative positions of crank and eccentric are as shown in Fig. 398.

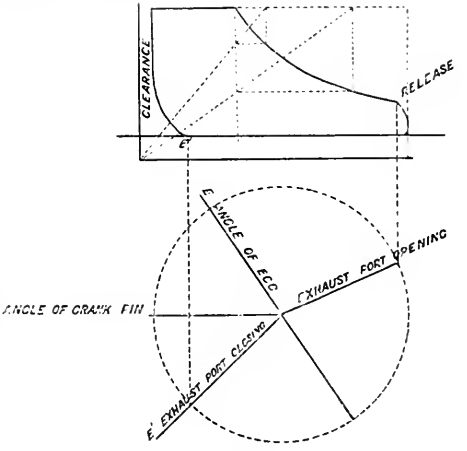

FIG. 398.

Fig. 399 is a diagram showing the respective positions of crank, eccentric, wrist-plate, valve-rods, and levers for the exhaust valve.

The circle of eccentric travel is first drawn on centre A, and the circumference divided into any number of equal parts numbered consecutively. These points are projected to the centre line, and with the length of the eccentric rod as radius corresponding points

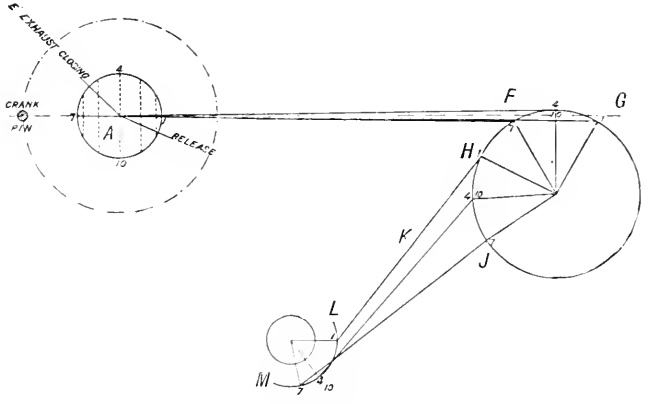

Fig. 399.

are transfixed on the travel arc FG on the wrist-plate. The distances thus obtained are then marked on the path of the pin HJ, and with the length of the exhaust valve-rod K as radius the movement of the exhaust pin on wrist-plate is marked off on the path of the pin of the exhaust valve-lever LM. It will be noticed that the

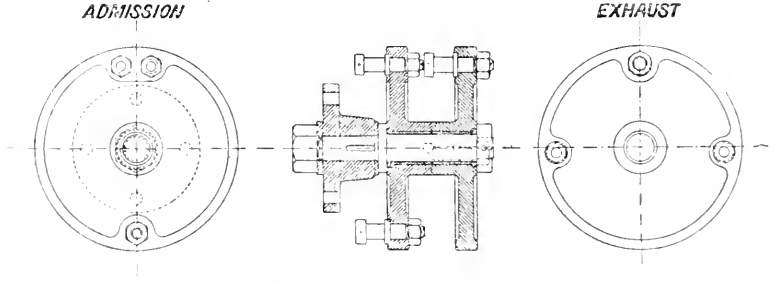

Fig. 400.—Wrist-plate Details.

movement of the valve during the half-period from 4 to 7 position (see valve lever arc LM) is much less than that during the half-period from 1 to 4.

The pin on the vibrating lever from which the wrist-plate is driven is taken to represent the travel of the valve. The real travel of the eccentric is proportionately less, depending on the length of the lever connections.

Fig. 400 is a drawing of the wrist-plate details, showing the admission and exhaust wrist-plates on the same spindle.

Fig. 401 shows details of valve spindle gland and bracket. Fig. 402 shows in detail the adjustable head of the valve-rods.

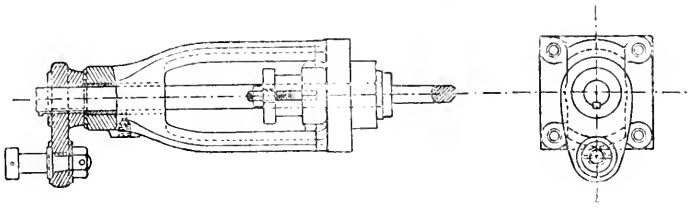

Fig. 401.

As an example of the performance of engines of the compound Corliss class, the following results are given from a test of a pair of

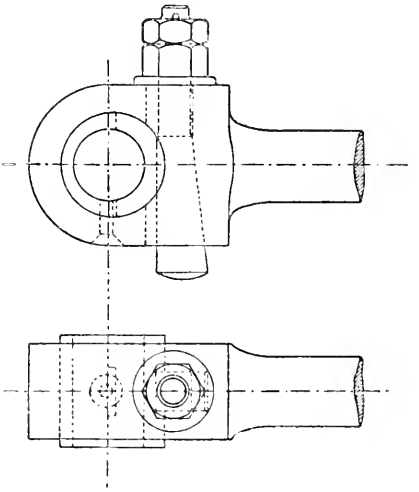

Fig. 402.

compound horizontal Corliss engines, made by Messrs. Hick, Hargreaves & Co., of Bolton.

Diameter of piston, high pressure	30 in.
„ low pressure	56 „
Diameter of piston-rods	6 „
Stroke	5 ft.
Clearance of high-pressure cylinder	4 per cent.
Clearance of low-pressure cylinder	5 „
Diameter of air-pump	25½ in.
Stroke of air-pump	20 „
Diameter of air-pump rod	3½ „

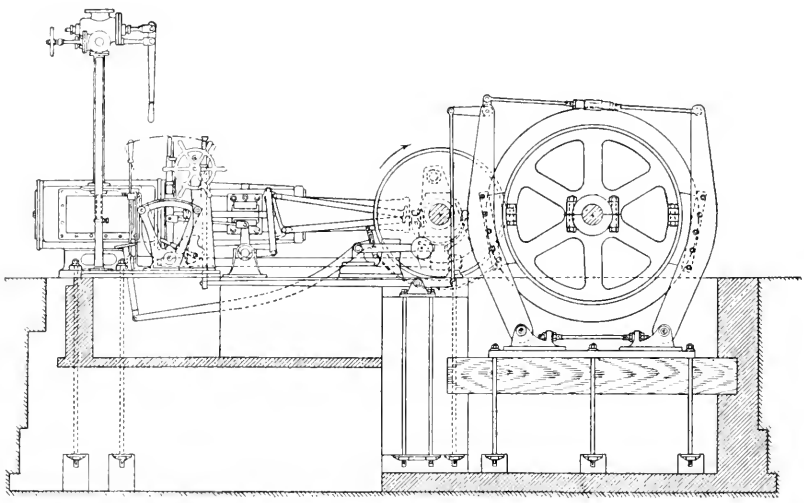

FIG. 403.

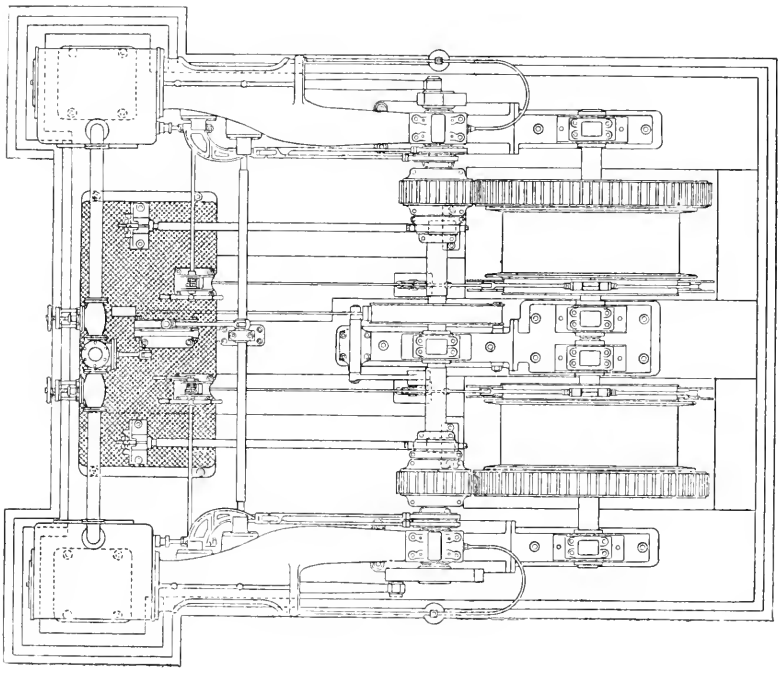

FIG. 404.

Diameter main steam-pipe	12 ins.
Flywheel diameter, grooved to receive 30 ropes ...	26 ft.
Volume of receiver between high-pressure exhaust valves and low-pressure admission valves ...	117·12 cubic ft.
Boiler pressure	112 lbs.
Piston speed	606 ft. per min.
Total I.H.P.	882·2
Dry steam per I.H.P. per hour	14·42 lbs.
Dry coal per I.H.P. per hour	1·74 „

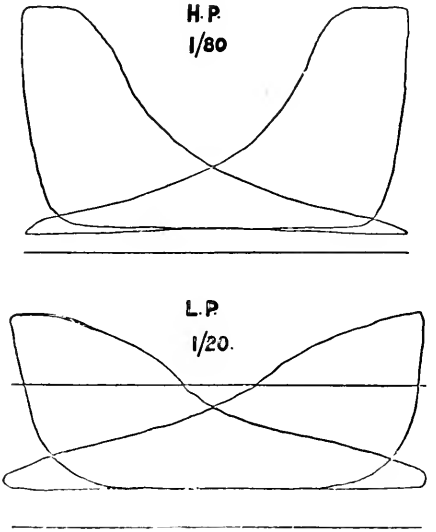

FIG. 405.

Fig. 405 gives reduced copies of the indicator diagrams.

Figs. 403 and 404 are the elevation and plan of a pair of 13-in. × 26-in. coupled geared winding engines suitable for sinking and winding in auriferous countries.

CHAPTER XXIII.

QUICK-REVOLUTION ENGINES.

Considerable hesitation is often felt by engineers accustomed to slow rotational speeds to the introduction of engines running at speeds so high that the separate working details become almost indistinguishable. But experience—and by this time a very large experience—has shown that such hesitation is unnecessary, and that with a design suitable for the purpose, such as is now supplied by several firms making a speciality of high speeds, no trouble need be expected on the score of rate of revolution.

The quick-revolution direct-coupled steam-engine is the result, in the first instance, of the urgent demand for such engines for the direct driving of dynamos.

In order to combine high speeds with large power, it is necessary to make the piston area large as compared with the length of stroke, and this suggests the probability of loss of efficiency by excessive clearance. The volume of the clearance in any cylinder varies nearly with the area of the piston, and is independent of the length of stroke, and when expressed as percentage of piston displacement, the proportion of clearance will obviously increase as the length of stroke decreases.

In the long-stroke engine the clearance may be from 3 to 7 per cent., while in the short-stroke type it may range from 10 to 20 per cent. or more. Where the compression does not reach initial pressure, the loss by clearance may thus be large, but this loss is reduced when the engine is compounded, hence the special value of compounding in the short-stroke type of engine.

Apart from the application of such engines for direct driving of dynamos, some advantage of the high rotational speeds are (1) that such engines may be smaller for a given power. (2) They give a more even turning moment than the slower engine of the same power. (3) There is a gain in steam economy at the high rational speeds, owing to the maintenance of a higher mean temperature of cylinder-walls, and a consequent reduction in the amount of condensation in the cylinder, when compared with the long-stroke engine.

Single-acting Engines. *The Willans Engine.*—This famous engine is the design of the late P. W. Willans. It has been the subject of most exhaustive trials and experiments, the results of which are

published in the *Proceedings* of the Institution of Civil Engineers,[1] and form classical studies on steam-engine performances and economy. The arrangement of the engine will be understood from Fig. 406.

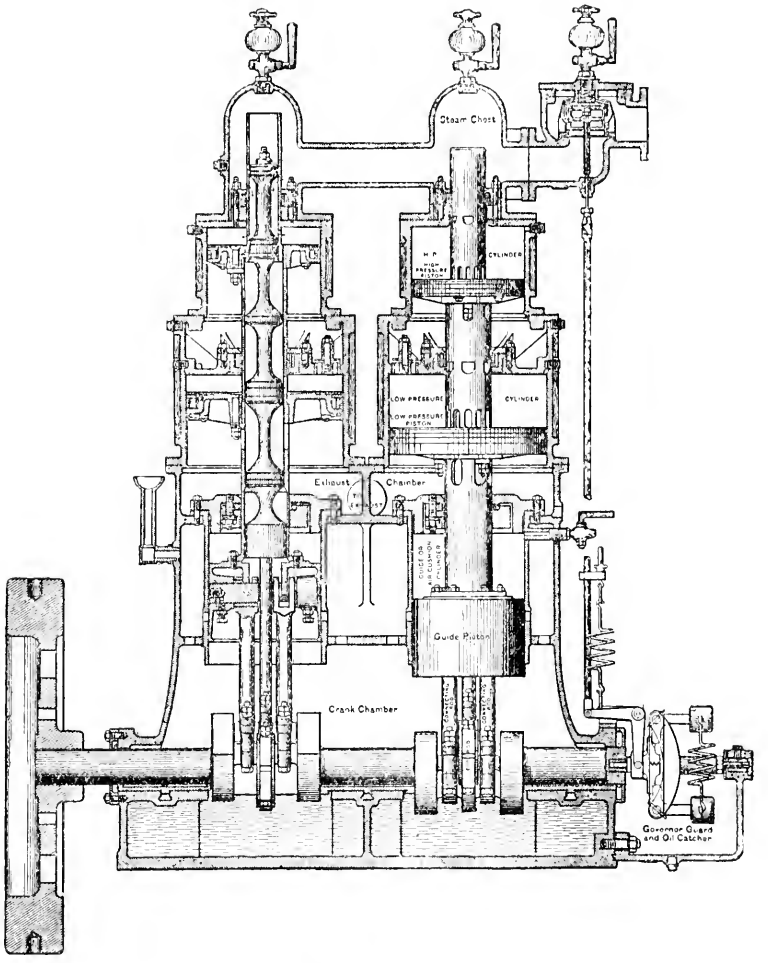

FIG. 406.—THE WILLANS ENGINE.

In the first place, it is a "single-acting" engine, that is, the steam acts upon one side of the piston only. A disadvantage of this arrangement is that for a given power the cylinder capacity must be

[1] *Proc. Inst. C.E.*, vols. xciii., xcvi., and cxiv.

twice as great as in a double-acting engine, or else the engine must run twice as many revolutions per minute. The advantage of making the engine single-acting is that it may be run at the highest speeds comfortably, without any danger of knocking, and without the necessity for frequent adjustment of brasses, because in the single-acting engine the working parts are in a condition of *constant thrust*, that is, the piston-rod is pressed against the crosshead-pin, and the connecting-rod against the crank-pin, not only during the working stroke, but during the return stroke also. There is no tendency to knock, because there is no change of direction of force transmitted. In order to secure that the condition of constant thrust is maintained, and that the connecting-rod and piston-rod are not flung away from their respective pins on the upper portion of the up-stroke, an amount of compression must be provided (either by the steam or by other means) which shall always cause a downward pressure in excess of the upward accelerating force. In the Willans engine, the requisite compression is obtained by means of an air-chamber above the guide-piston—the lowest piston on the rod. This piston on the up-stroke compresses the air contained in the chamber above the piston, and thus any amount of compression can be obtained according to the clearance allowed. The work expended in compressing the air is given out again by expansion on the succeeding down-stroke.

The slide-valves are of the piston type, all on one rod, and work inside the hollow piston-rod, the valves moving over ports cut in the form of elongated passages in the hollow piston-rod as shown. This arrangement reduces clearance volume to a minimum, and serves as an excellent means of draining the cylinders of water, the water being swept out with the exhaust steam when the valve uncovers the port.

Steam is admitted above the top piston through ports in the hollow piston-rod, and is exhausted to under side of same, in each case entering and leaving the cylinders through ports in the piston-rod.

Each line of pistons is connected to its corresponding crank by two connecting-rods, with a space between them, in which works an eccentric forged solid on the crank-pin.

The reason the eccentric is on the crank-pin, and not on the shaft, as usual, is that the valve-face (*i.e.* the inside surface of the hollow piston-rod) moves with the piston; consequently the valve-motion required is a motion relative to the piston, and this is obtained by mounting the eccentric on the crank-pin.

The cranks dip bodily into the lubricant in the crank chamber every revolution. In doing so they splash the oil over the main bearings and other portions requiring lubrication.

The engine is governed by a throttling governor.

References are made to the high economical performance of this engine elsewhere (see pp. 314 and 315).

The Peache engine (Fig. 407) is another example of a good type of single-acting engine. The excess pressure is maintained on the pistons, in the direction of the crank-shaft, during the up-stroke, so

that a constant thrust is maintained on all bearings both on up and down strokes, by means of the compression and subsequent expansion

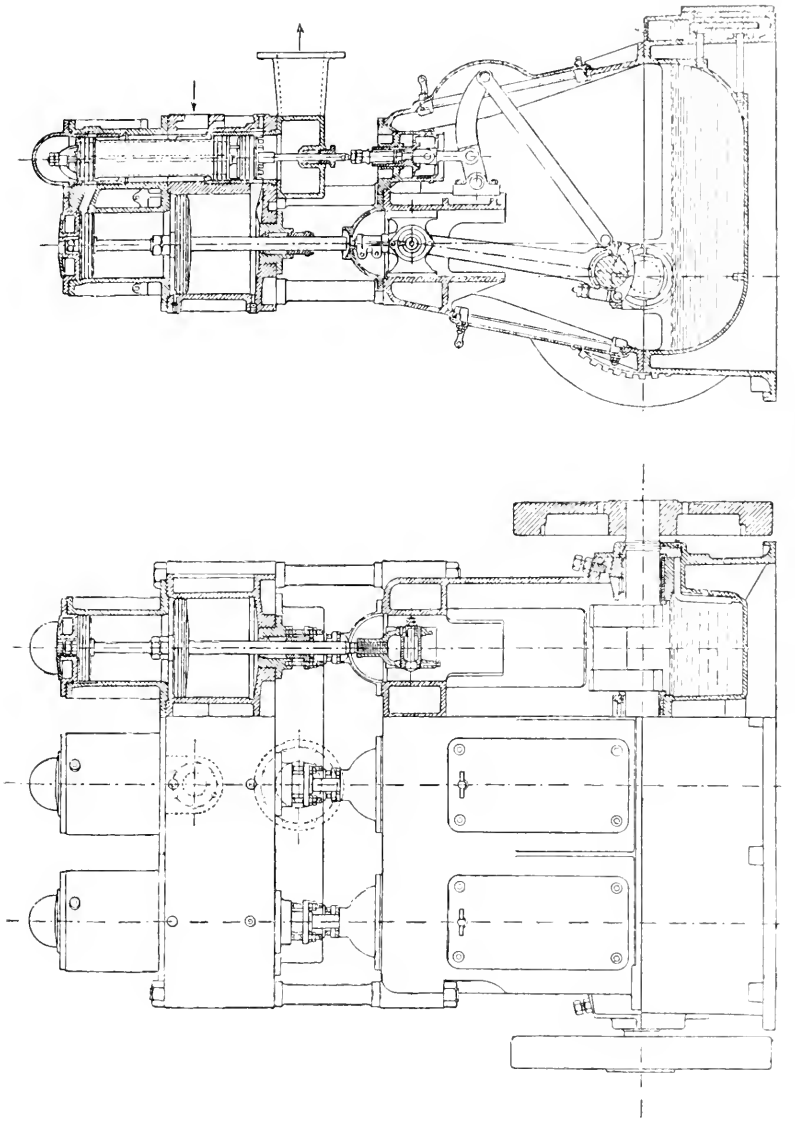

FIG. 307.—THE PEACHE ENGINE.

of steam in the space between the high-pressure and low-pressure pistons. Distribution of the steam is effected by a valve gear deriving

its motion from a point on the connecting-rod. This valve motion provides for the placing of the valves in a convenient position at the back of the cylinders. There are no eccentrics on the crank-shaft, and therefore room is left for long and well-supported crank-shaft bearings. The crank-shaft and other working parts run in a bath of oil and water. The engine consists of three tandem compound engines combined and working on cranks at 120°. The steam is distributed to the two cylinders of each engine by a single piston valve. The steam enters by a branch on the low-pressure cylinder-casting, and at the centre-line of the steam-chest, and passes right and left by passages formed in the casting to the other two steam-chests. At the top of the stroke the high-pressure piston uncovers two small bye-pass ports which communicate with the space underneath that piston, and thus for an instant at the top of each stroke the space called the controlling-cylinder is placed in communication with the high-pressure cylinder, and by this means the initial pressure of steam in the controlling cylinder is maintained at a constant proportion to that in the high-pressure cylinder.

In the condensing type engines, in which the ratio of expansion and range of temperature is large, a steam-jacket is applied to the controlling cylinder, so that the steam in the controlling cylinder becomes a medium for the transfer of heat from the steam-jacket to the working surfaces of the high-pressure and low-pressure cylinders.

To maintain a constant thrust on the valve-motion an air-buffer is adopted.

A feature of this engine is the position of the crank-shaft, which is placed in front of the cylinder-axis. This position is adopted to obviate reversal of pressure of the cross-head on the guides, which occurs in a single-acting engine with the usual position of crank-shaft. It will be seen that the connecting-rod is nearly vertical during the down-stroke, when the heaviest pressures are being transmitted by it, and that during the up-stroke, when the angle the connecting-rod makes with the piston-rod is large, the pressures transmitted are small, but the angle of the connecting-rod being always towards the back cross-head guiding surface, the resultant pressure is always on the back guide.

Results of Trials of 150 Horse-power Peache Compound Engine.

	Condensing.	Non-condensing.
Steam-chest pressure	94 lbs.	119 lbs.
Revolutions	438	438
M.E.P.	40·01	42·96
I.H.P.	141	150·5
E.H.P.	124·3	128·0
Efficiency per cent.	88·3	85
Steam per I.H.P. per hour	18·4	22
„ E.H.P. „	20·9	25·8

The Belliss Engine.—This engine well illustrates the possibility of running double-acting engines at high rotational speed without fear of excessive wear and knocking. It is claimed for it that its success

COMPARATIVE TRIALS OF BELLISS 250-H.P. HIGH-SPEED SELF-LUBRICATING ENGINE, CONDENSING, WHEN GOVERNING BY EXPANDING AND BY THROTTLING.[1]

Cylinders 12 *and* 20 *in. diameter, with* 10-*in. stroke. Boiler pressure,* 150 *lbs. per square inch above atmosphere.*

Governing by expansion governor or by throttling.		Expanding. Expansion governor *in* action.				Throttling. Expansion governor *out of* action.			
Load		Full.	Five eighths.	One third.	One quarter.	Full.	Five eighths.	One third.	One quarter.
Mean effective pressure per square inch reduced to low-pressure cylinder	lbs.	41·0	27·0	16·4	12·4	40·1	25·9	15·7	10·9
Mean revolutions per minute	revs.	370	373	380	380	370	370	380	382
Mean indicated horse-power	I.H.P.	240·9	161·0	99·0	75·3	235·4	152·2	95·0	66·2
Mean electric horse-power	E.H.P.	213·0	132·8	77·8	53·0	213·0	132·2	77·8	53·0
Combined efficieney, $\frac{\text{E.H.P.}}{\text{I.H.P.}}$	per cent.	88·3	82·4	78·5	70·3	90·4	86·8	81·9	80·0
Water per hour, total	lbs.	4579	3041	2209	1818	4473	2871	1992	1505
„ „ per E.H.P.	lbs	21·5	22·9	28·5	34·3	21·0	21·7	25·6	28·4

[1] From *Proc. Inst. Mech. Engineers*, 1897.

is chiefly due to the application of *forced lubrication*, that is, supplying the lubricant to the moving parts under pressure. The pressure required for this purpose is not the maximum pressure on the bearing, but only a pressure sufficient to force the oil into the bearing on the

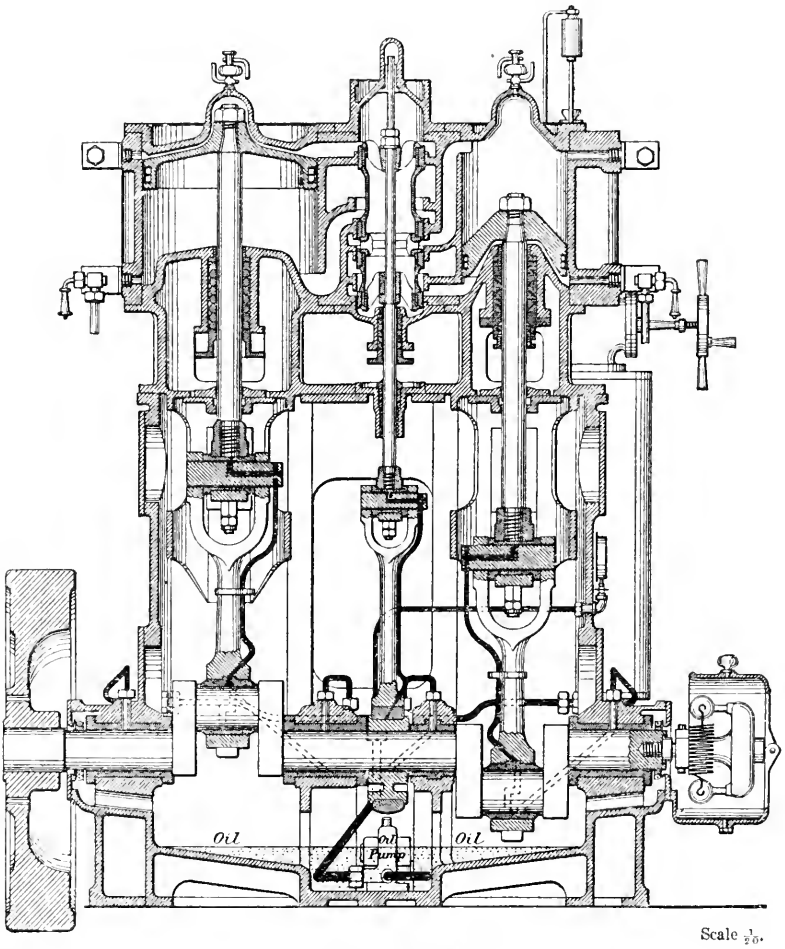

FIG. 408.—THE BELLISS ENGINE.

return stroke, when the pressure is reduced on one side of the pin; while on the driving stroke the time is not sufficient to squeeze the oil from between the surfaces, before the pressure is again reduced and the supply renewed.

The difficulty felt in running double-acting engines at high rotational

speeds arises from the known necessity of close adjustment of brasses to avoid audible knock and ensure quiet running; and this necessary closeness of adjustment renders the pin and its bearing liable to get hot and the pin to seize. The liability to seize arises from the fact

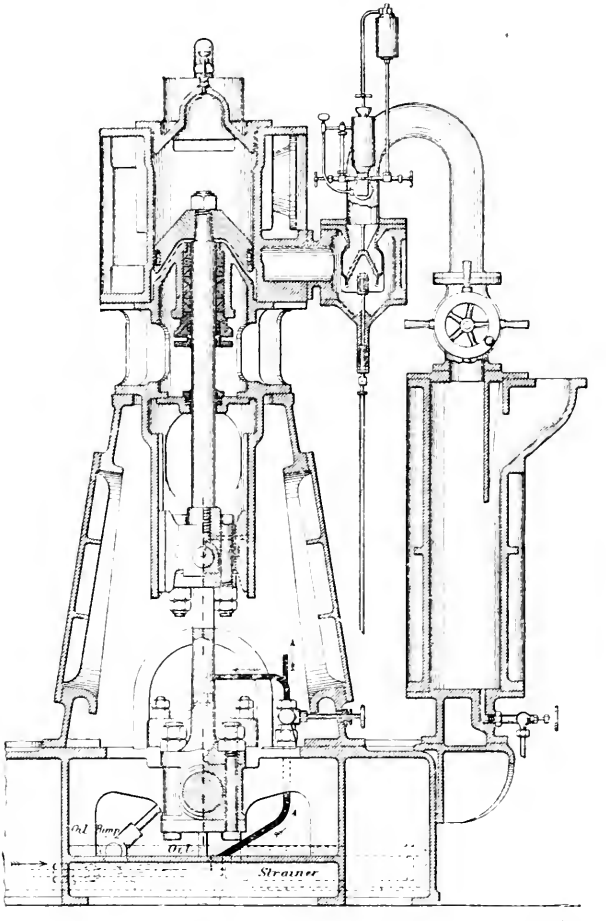

FIG. 409.—THE BELLISS ENGINE.

that, owing to the necessary closeness of fit, any small increase of temperature in the pin causes sufficient expansion to make it overtake the small clearance permissible when cold, and trouble immediately follows from seizure of the pin.[1]

[1] See Dales on "High-speed Engines," *Proc. Inst. C.E.*, vol. cxxxvi.

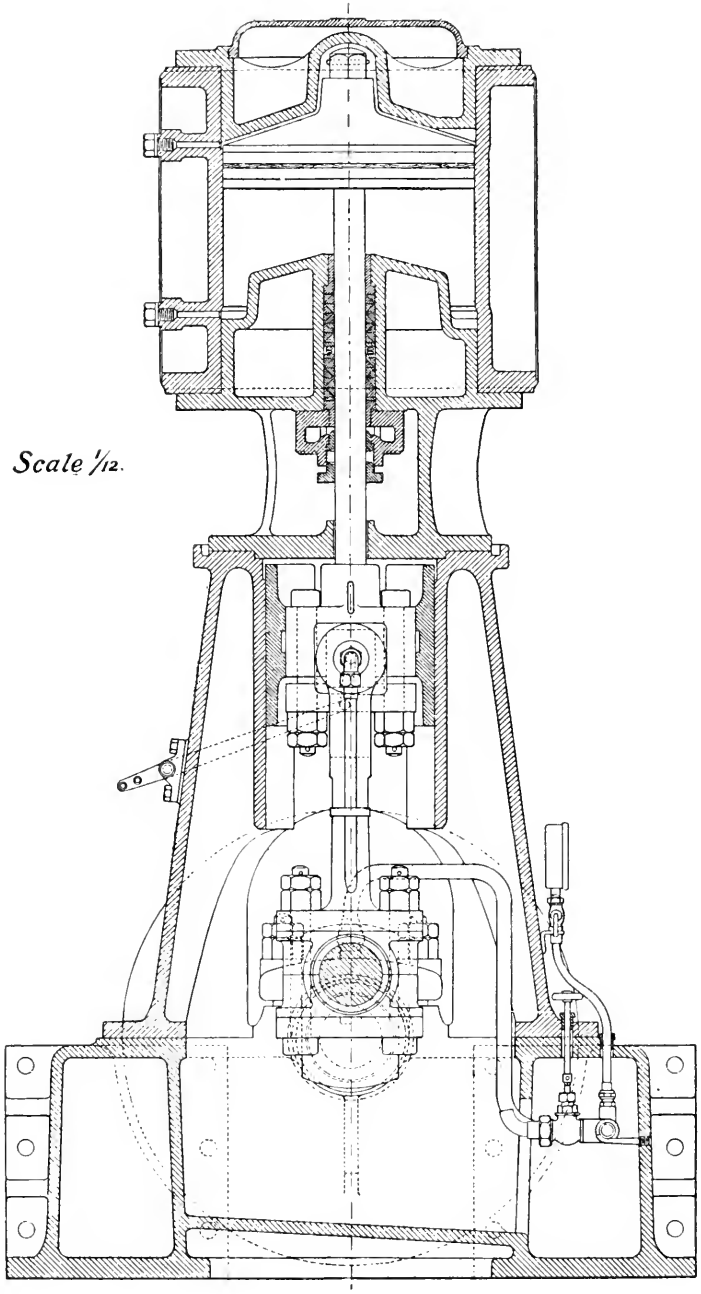

Fig. 410.

Scale 1/12.

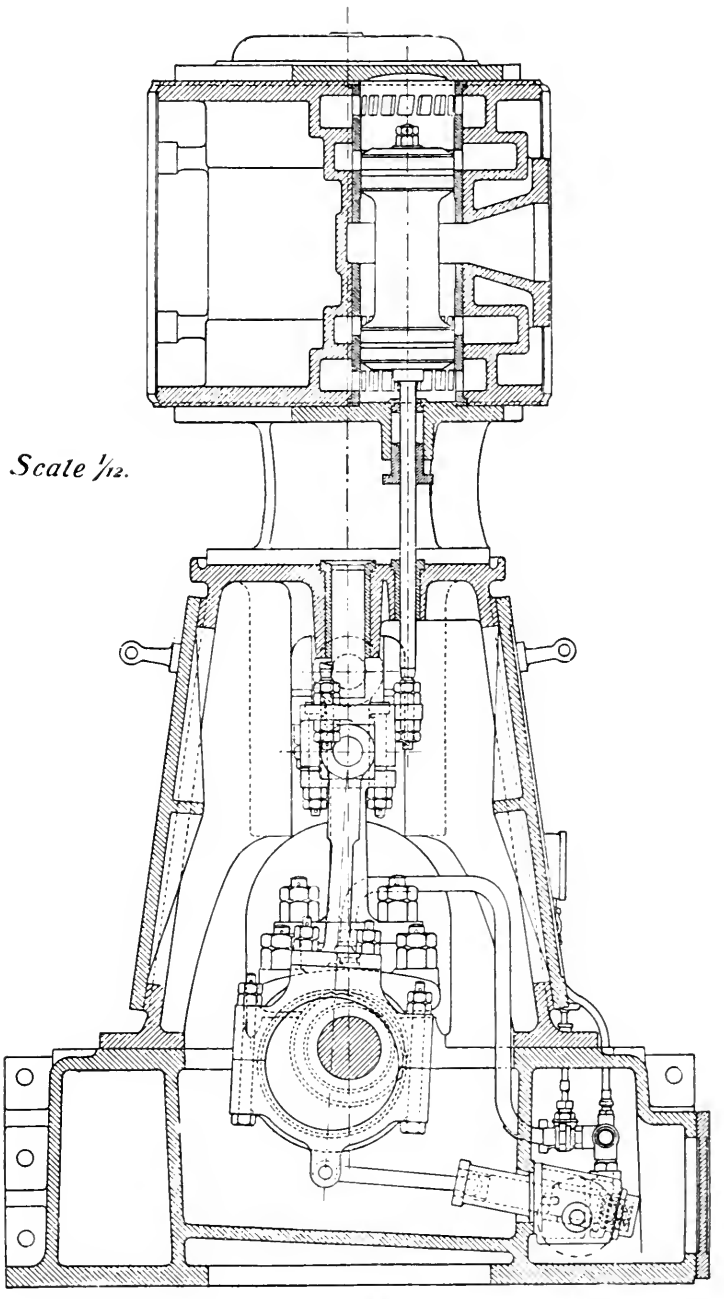

Fig. 411.

There cannot, however, be any increase of temperature in the pin so long as the pin and its bearing are well supplied with oil between the surfaces, hence the value of forced lubrication.

In the Belliss engine the forced lubrication is supplied to all the bearings by means of a simple pump without valves or packing, discharging the oil at a pressure of about 15 lbs. per square inch through a specially arranged system of oil-distributors shown in Fig. 408, which is a sectional elevation of the Belliss engine. Fig. 409 is a side elevation of the same engine.[1]

It will be seen that the steam is supplied to the engine after first passing it through a large separator, where water-particles in the steam due to priming in the boiler or condensation in the pipes are separated, and the steam is passed forward in a drier condition to the engine.

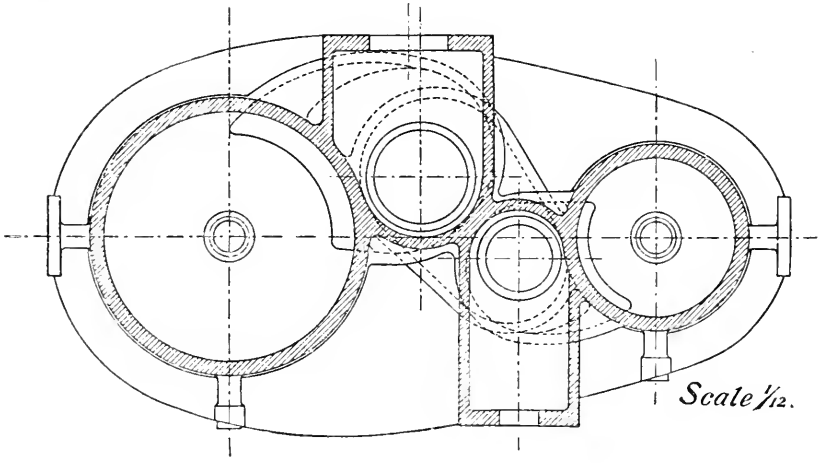

FIG. 412.

There is only one slide-valve for the two cylinders placed between the high and low pressure cylinders. It is of the piston type, and is driven by a single eccentric as shown.

The governor is of the throttling type, working an equilibrium throttle-valve (Fig. 409), and is adjustable by hand while the engine is running.

The table shows the performance of this engine under two different systems of governing.

Plate II. and Figs. 410, 411, 412 are sectional drawings of a high-speed double-acting compound engine specially designed for this book by Mr. T. Scott-King.

The engines have 10 in. × 16 in. cylinder × 8 in. stroke; the cranks are opposite.

[1] From the *Proceedings of the Inst. of Mech. Engrs.*

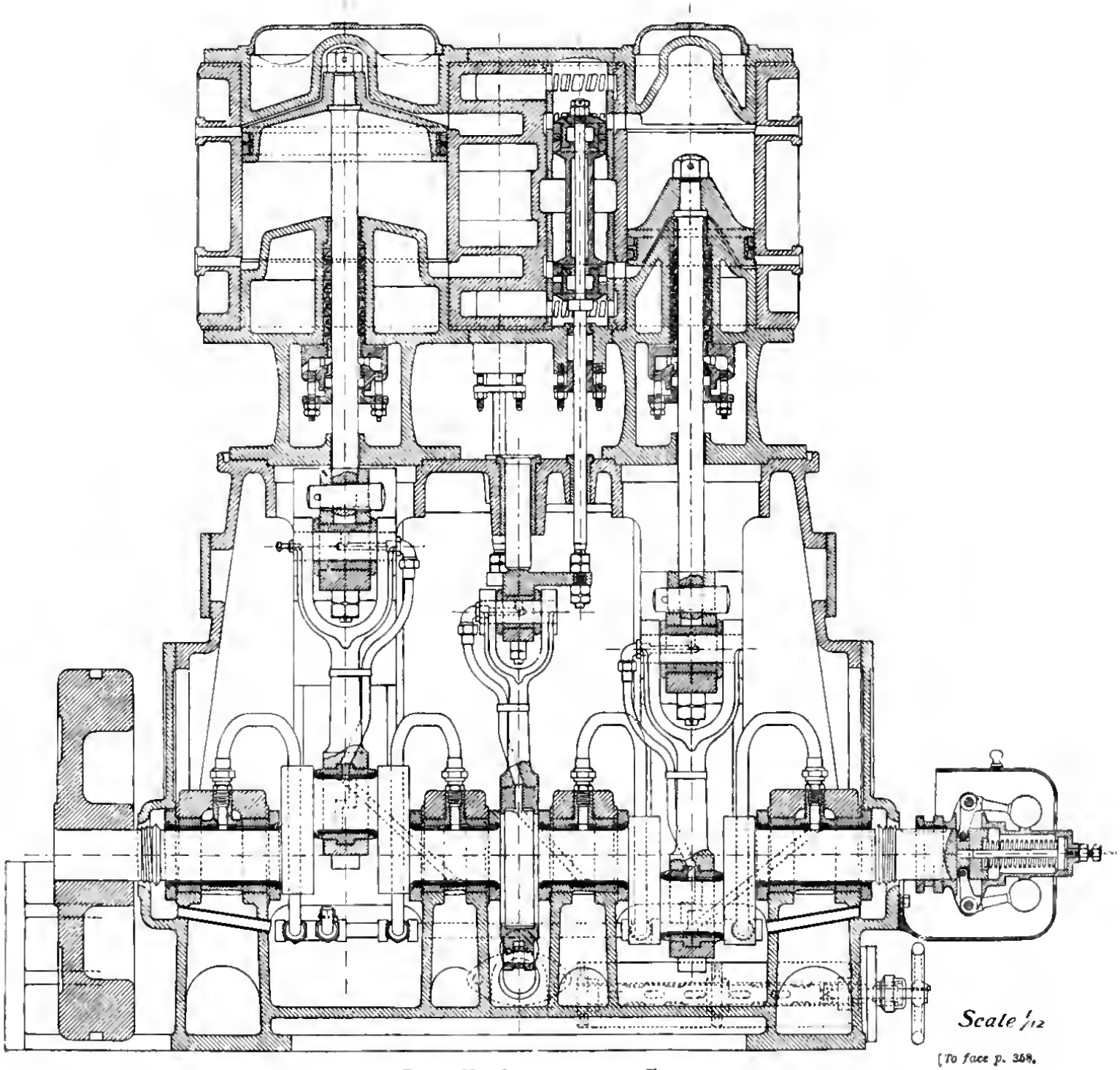

PLATE II.—QUICK-REVOLUTION ENGINES

[To face p. 358.

It will be noticed from the plan (Fig. 412) that the centres of the cylinders are kept as close as possible by arranging the high-pressure valve somewhat in front of, and the low-pressure valve behind, the centre line of the two cylinders.

The slide-valves are driven by one eccentric only, the valve-rods being connected to separate arms extending from the eccentric rod. Both of the valves are of the piston type; they are therefore in equilibrium.

The weight of the moving parts of the two engines is made equal, by increasing the thickness of the high-pressure piston.

Exceptionally long metallic-packed piston-rod stuffing-boxes are provided.

The engine is fitted with a very complete system of forced lubrication to all the bearings, the lubricant being forced by means of a simple pump driven from the eccentric strap. Advantage is taken of centrifugal force to distribute the oil to the crank-pins and eccentric.

A throttle-valve governor is attached, as shown, and the working parts of the engine are completely enclosed.

Figs. 413 and 414 are illustrations of the *Sissons high-speed engine.* The special features of the engine are (1) the self-adjusting crank-pin brasses in the large end of the connecting rod already shown in Fig. 320.

(2) The arrangement of the cylinders so that the centre-lines of the engines may be kept as close together as it is possible to get them. The object of this is to reduce the rocking moment; the high-pressure piston and its long piston-rod are together made equal in weight to the low-pressure piston and its rod. The rocking moment of the couple is as nearly as possible counteracted by balance weights attached to the outer crank webs. The cranks are opposite, and the engine runs very steadily.

(3) The slide-valves are both of the piston type; the high-pressure valve has *inside* steam-admission, and the low-pressure valve has *outside* steam-admission; thus there is simply a plain neck connecting the high-pressure cylinder exhaust with the low-pressure cylinder, and no stuffing-box is required there. The only valve-spindle stuffing-box is at the lower part of the low-pressure cylinder, where it is exposed to the pressure and temperature of receiver steam. The valve-spindle is provided with an air-cushion cylinder, thus reducing the load on the valve-gear to a minimum.

(4) This engine lends itself well to the use of superheated steam, first because of the absence of a valve-spindle stuffing-box in the initially superheated steam, and secondly because of the length of the bush of the high-pressure piston-rod, which removes any possibility of difficulty occurring with the high-pressure stuffing-box.

(5) This engine is fitted with a governor (not shown) which acts on the cut-off, varying the number of expansions during the fall from full-load to medium load, and afterwards completing the governing of the engine by throttling. This system of governing

is in accordance with the teaching to be deduced from Fig. 367, from which it is seen that below a certain load throttling governing is

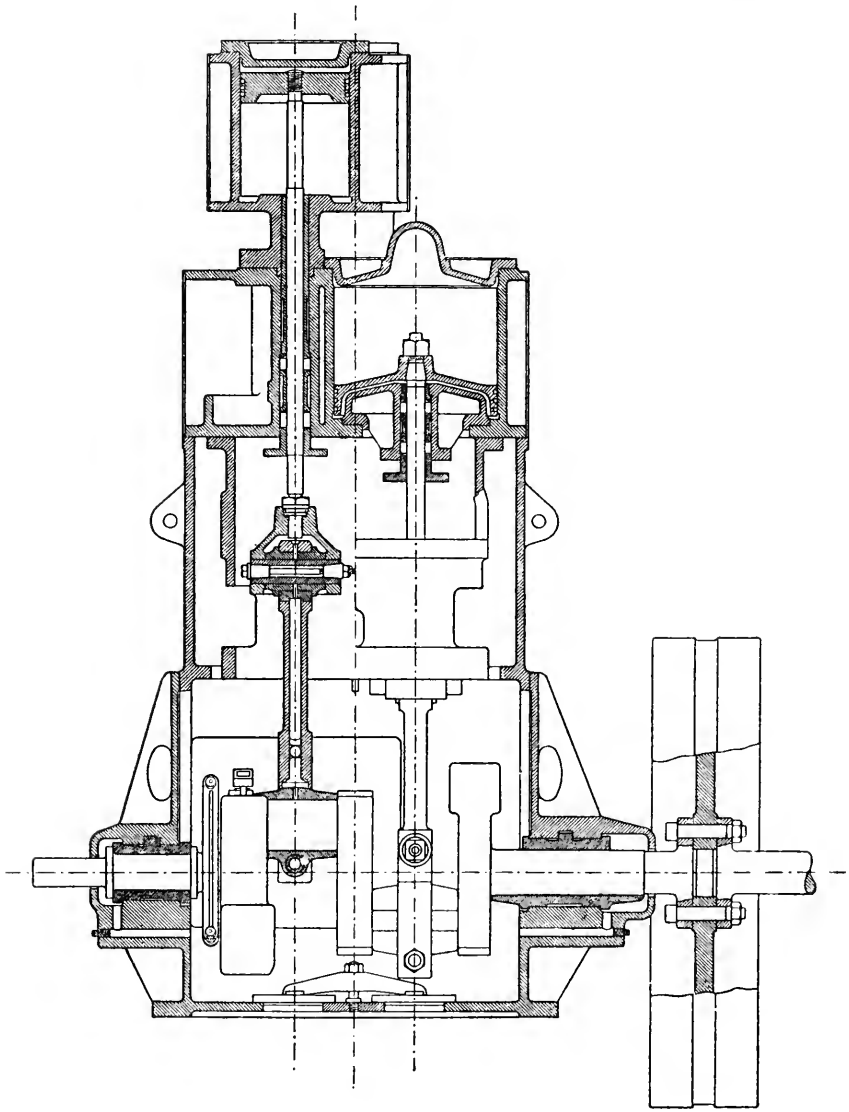

FIG. 413.

the more economical ; above that load, governing by variable expansion has the advantage.

Direction of the Stresses in Single- and Double-acting Engines.—In the single-acting engine there is in every revolution—

(1) A reversal of the twisting stress in the crank-shaft, the piston driving the crank during the down-stroke, and the crank lifting the piston during the up-stroke.

(2) A reversal of the mean direction of the bending stresses on the crank-pin. This will be seen by considering the diagram (Fig. 415). Thus, suppose the circle 1 2 3 4 to represent the crank-pin travelling round the circular crank-pin path of a vertical engine. Here, when the piston is at the top of its stroke, there is a vertical bending stress on the crank-pin in the direction 1 to 3; at half-stroke downwards, the bending is in the direction 4 to 2; at the bottom position, the bending at end of stroke is in the direction 3 to 1. The mean bending is in the direction 4 to 2.

On the return stroke the crank lifts the moving parts, and the mean bending stress is now in the direction 2 to 4, which is opposite to that in the downward stroke.

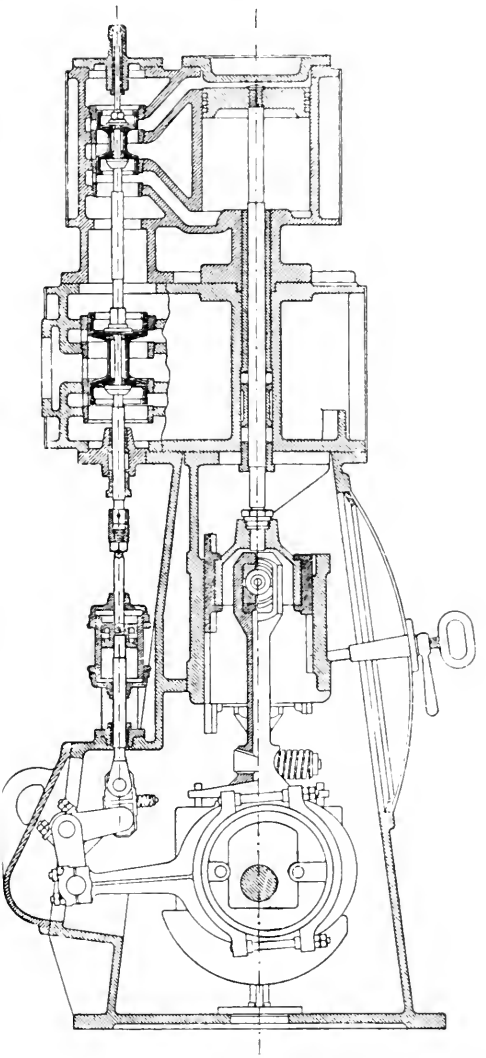

Fig. 414.

In the double-acting engine the twisting stress on the crank-shaft and the mean bending action on the crank-pin are not reversed, and in these respects the advantage is with the double-acting engine.

On the other hand, in the double-acting engine there is—

(1) A reversal of the stress in the piston-rod and connecting-rod, these rods being in compression on the down-stroke and in tension on the up-stroke.

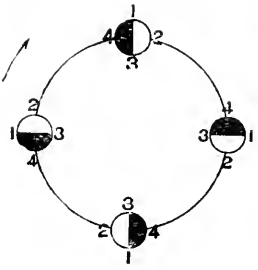

Fig. 415.

(2) A reversal of the bending stress on the cross-head pin.

In the single-acting engine there is no reversal of stress in the piston-rod and connecting-rod, these rods being always in compression for both strokes; and the bending stress on the cross-head pin is always in one direction. In these latter respects the single-acting engine has the advantage. It will also be noticed—

(1) That in the double-acting engine the wear on the cross-head pin is on both its top and bottom surfaces, and on both the top and bottom cross-head pin brasses—hence the tendency to knock; while in the single-acting engine the wear is on the upper portion only of the cross-head pin, and on the top cross-head brass only.

(2) That in the double-acting engine the wear is on both the top and bottom of the crank-pin brasses, causing a tendency to knock; while in the single-acting engine the wear is on the top crank-pin brass only.

(3) The pressure on the brasses in single-acting engines being never entirely relieved, the lubricating arrangements require to be carefully designed.

The crank shaft has probably been the cause of most trouble in high-speed engine practice, the fault being usually want of sufficient diameter, and a consequent tendency of the shaft to bend, causing uneven wearing in the bearings, heating, and more or less frequent breakages.

Shafts are now made of larger diameter than formerly, the objection to increased rubbing velocity at high speeds is removed by improved methods of lubrication.

The shafts and other working parts are further stiffened by using steel of high tenacity.

CHAPTER XXIV.

THE MARINE ENGINE.

Figs. 416, 417, 418 illustrate types of triple-expansion marine engines showing various arrangements of cylinders. The letters of reference

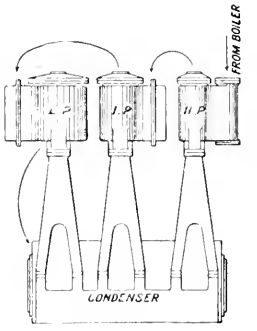

Fig. 416.

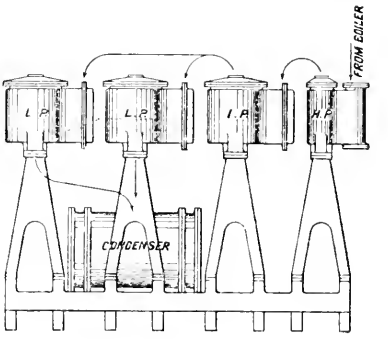

Fig. 417.

on the cylinders—H.P., high-pressure cylinder; I.P., intermediate-pressure cylinder; and L.P., low-pressure cylinder—indicate the progress of the steam from admission to the high-pressure steam-chest to leaving the engine on its way to the condenser.

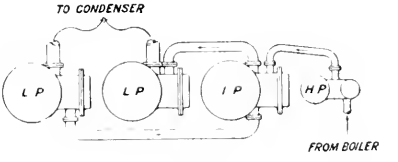

Fig. 418.

Fig. 418 shows two low-pressure cylinders. This arrangement is adopted where a single low-pressure cylinder casting becomes too large. It is also convenient for the purpose of more effectually balancing the engine.

Fig. 419 is given as illustrating a good example of a modern marine engine of the four-crank triple-expansion type. Each of the two low-pressure cylinders has half the piston area of the one large low-pressure cylinder which would otherwise be required.

The engines are capable of developing about 660 I.H.P.

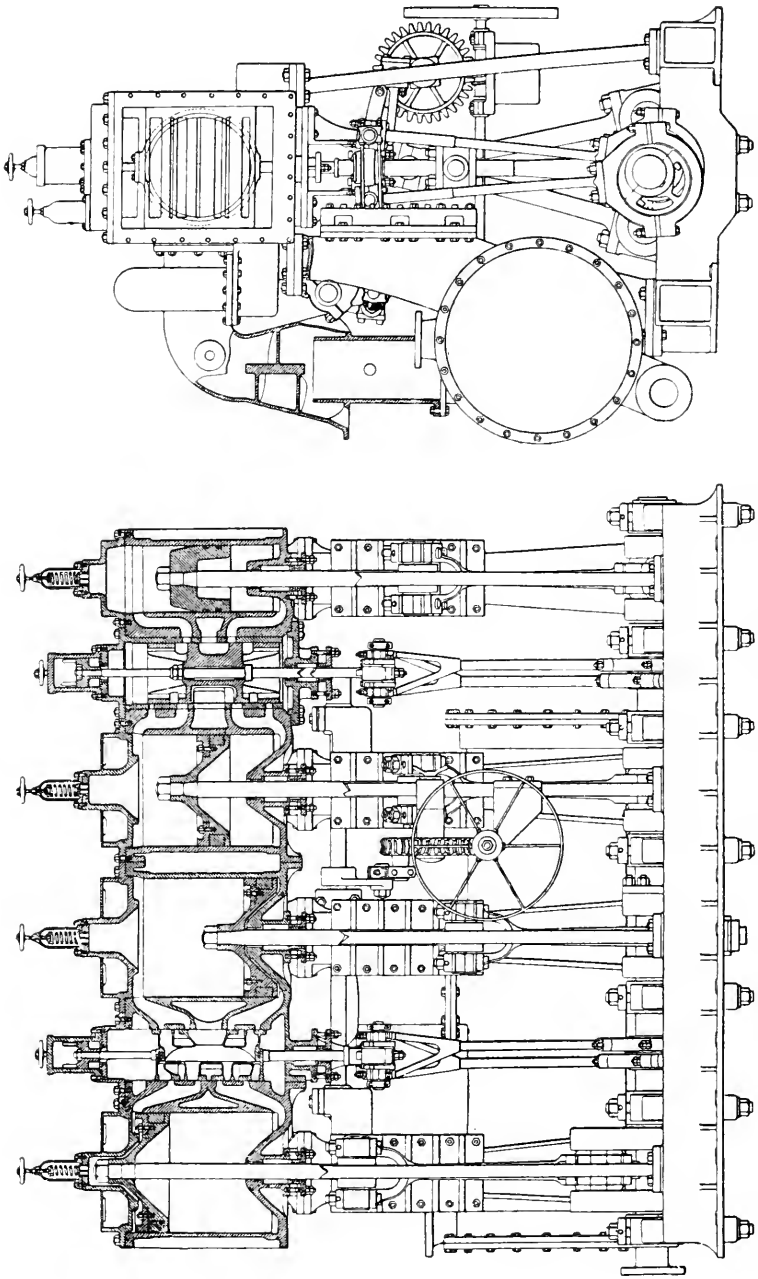

FIG. 419.—Four-crank triple-expansion marine engine.

The dimensions and other particulars are as follows :—

Diameter of H.P. cylinder	...	...	...	...	13	in.
„ L.P. „	...	...	...	...	22	„
„ F.L.P. „	...	...	...	...	23½	„
„ A.L.P. „	...	...	...	...	23½	„
Stroke	...	...	...	...	21	„
Boiler pressure	...	...	...	...	170	lbs.
Revolutions per minute	...	...	...	...	166	
Piston speed „	...	...	...	...	581	ft.
Vacuum	...	...	...	...	26	in.
Indicated horse-power—						
H.P. cylinder ...	...	...	...	213		
I.P. „ ...	...	...	...	212		
F.L.P. „ ...	...	...	...	107		
A.L.P. „ ...	...	...	...	128		
				——	660	

The two forward cranks are placed directly opposite each other, and the two after cranks in the same relative position to each other, but at right angles to the two forward ones. The pistons working in opposite directions are made of equal weights.[1]

The engines are fitted with only two sets of slide-valves and valve gear, and in each case one valve regulates the steam-distribution to two cylinders.

Plate III. illustrates the engines of the s.s. *Inchmona*, which is constructed with the special object of high steam economy and freedom from vibration. These engines are built with five cranks, and the boiler pressure is 255 lbs. per square inch, the steam being generated in cylindrical boilers of the ordinary multitubular type. This is probably the first instance of so high a pressure being carried in a large boiler of this type. The boilers were tested by Lloyd's surveyors to 510 lbs. per square inch hydraulic pressure.

The engines are quadruple expansion, with two low-pressure cylinders, making five cylinders connected to five cranks. The cranks are set at equal angles. The engine is designed so as to have light reciprocating parts, equal weights of reciprocating parts on each crank-pin, to divide the total work between five cranks, thus reducing initial stresses on the bearings, and distributing the total power at five equal points round the crank circle.

The boilers are fitted with a battery of steam-drying tubes through which the steam passes on its way to the engines, and the cylinders are very thoroughly steam-jacketed. The feed-water resulting from condensation is taken up at a low temperature due to the adoption of a high vacuum, and is passed first through feed-heaters heated by exhaust steam, and then through a further series of feed-heaters working at successively higher pressures and temperatures with steam taken from successive steam-chests, so that before the feed enters the boilers it is at a temperature about 400° Fahr.

The boilers are fitted with the induced draught system of Messrs.

[1] From a paper by Mr. John Thom, read before the Inst. of Engineers and Shipbuilders, Scotland.

John Brown & Co., of Sheffield, by means of which a rate of combustion can be maintained of 40 lbs. of coal per square foot of fire-grate.

Trials of these engines resulted in a consumption of 1·07 lb. of North country coal per I.H.P. per hour.

In the series of marine engine trials conducted by a committee of the Institution of Mechanical Engineers,[1] the following results were obtained :—

	Boiler pressure.	Revolutions.	Stroke.	Feed-water per I.H.P. per hour.	Fuel per I.P.H. per hour.
			in.		
Compound engines—					
Fusi Yama ...	56·8	55·6	33	21·2	2·66
Colchester	80·5	86·6	36	21·7	2·90
Ville de Douvres ...	105·8	36·82	72	20·8	2·32
Triple expansion—					
Meteor	145·2	71·8	48	15	2·01
Tartar	143·6	70·0	42	—	1·77
Iona	165·0	61·1	39	13·3	1·46

Reduced consumption of fuel per unit of power has steadily followed the gradual increase of steam-pressures, as will be seen from the following table of marine-engine performance :—

Year.	Boiler-pressure by gauge.	Type of engine.	Consumption of coal per I.H.P. per hour.
	lbs.		lbs.
1830	2 to 3	Simple	9·0
1840	8	,,	5·5
1850	14	,,	4·0
1860	30	,,	3·0
1870	50	,,	2·6
1880	80	Compound	2·2
1886	160	Triple	1·5
1896	255	Quadruple	1·07

Particulars of some War-ship Engines and their Performance.—*Battleships :* Indicated horse-power, 18,000 ; twin engines, cylinders, 33½ in., 54½ in., 63 in., 63 in. ; stroke, 48 in. ; revolutions, 120 ; piston speed, 960 ft. per min. ; working steam-pressure, 300 lbs. to 250 lbs. ; Belleville boilers, 24 ; heating surface, 43,260 sq. ft. ; grate area, 1375 sq. ft. ; heating surface per I.H.P., 2·4 sq. ft. ; I.H.P. per square foot of grate area, 13·1. The boilers are worked with natural draught.

Cruisers : Indicated horse-power, 30,000 ; twin engines, cylinders, 43½ in., 71 in., 81½ in., 81½ in. ; stroke, 48 in. ; revolutions, 120 ; piston speed, 960 ft. per min. ; working steam-pressure, 300 lbs. to

[1] *Proc. Inst. Mech. Engrs.*, 1894, p. 33.

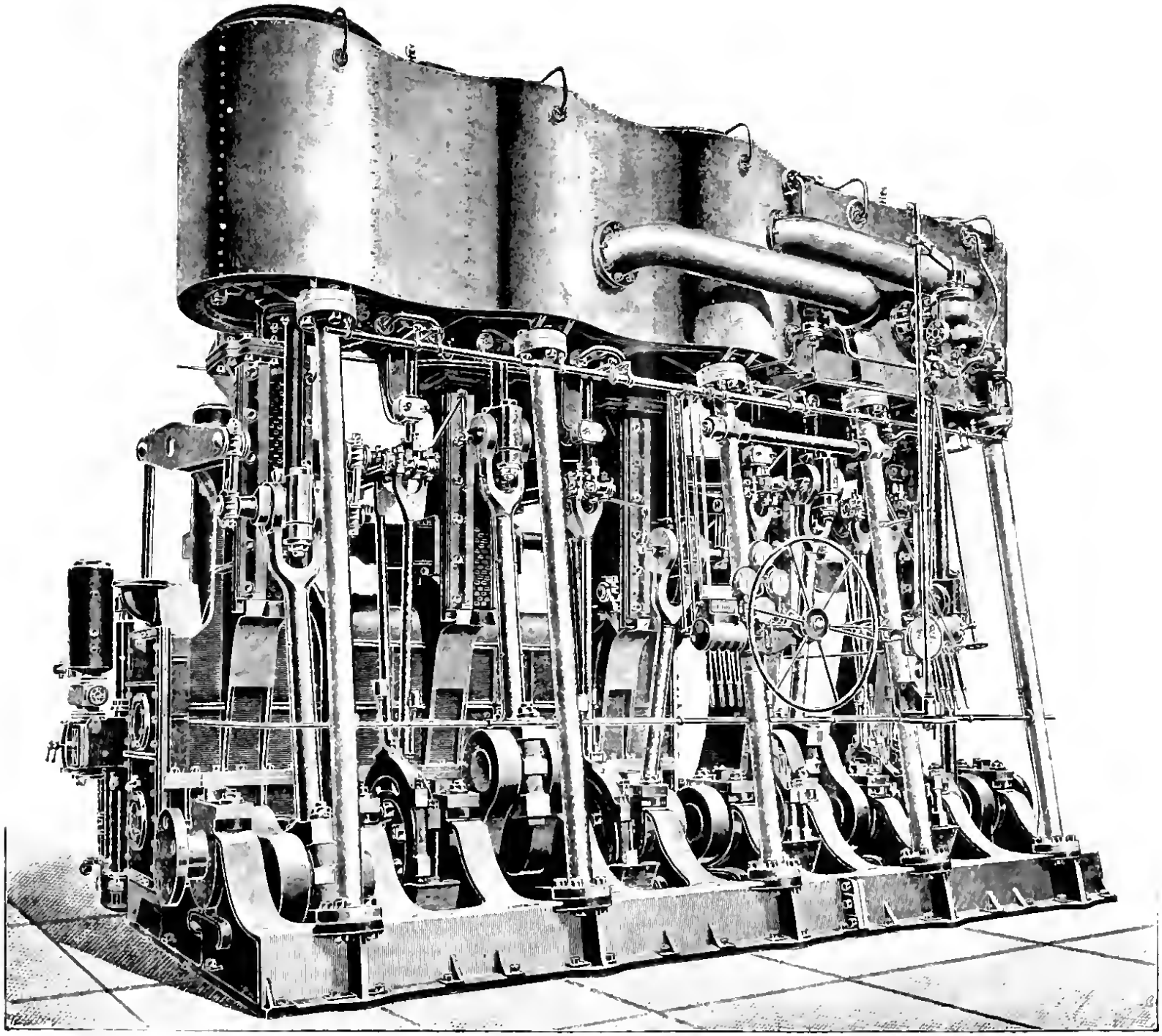

From the "Engineer."

PLATE III.—FIVE-CRANE QUADRUPLE-EXPANSION ENGINES: S.S "INCHMONA"

[*To face p.* 366

250 lbs.; Belleville boilers, 43; heating surface, 71,970 sq. ft.; grate surface, 2310 sq. ft.; I.H.P. per ton of machinery, 12; heating surface per I.H.P., 2·4 sq. ft.; I.H.P. per square foot of grate, 13·0.

The following are particulars and data of trials of H.M.S. *Amphitrite*:—

	Low power.	Medium power.	Maximum power.
Steam-pressure in boilers ...	226	252	279
„ at engines ...	212	240	254
Mean pressures, high ...	37·3	89·5	102·8
„ intermediate	15·5	36·3	44·2
„ forward low	5·5	13·1	16·9
„ aft low ...	5·5	13·3	16·9
Revolutions	72·5	111·1	121·8
I.H.P. starboard engine ...	1899	6898	9171
„ port engine	1852	6797	9058
I.H.P. total	3751	13,695	18,229
Coal per I.H.P. per hour ...	1·54	1·43	1·57
Coal burnt per square foot of grate per hour ... lbs.	9·84	—	19·8
Cut off per cent., high ...	—	64	66
„ „ intermediate	—	65	—
„ „ low	—	70	—

Ratio of Power to Dimensions of Ships.—

If H = indicated horse-power;
V = speed in knots;
D = displacement in tons;
C = a constant.

$$\text{Then } H = \frac{V^3 \times D^{\frac{2}{3}}}{C}$$

For large and fast steamers, C = 250
For large cargo vessels, C = 235
For cruisers and battleships, C = 225

The above are average values of the constant C.

CHAPTER XXV.

THE LOCOMOTIVE.

FIG. 420 illustrates the general arrangement and construction of an express passenger locomotive engine.

It is necessary that the locomotive shall be self-contained, that is, it must consist of a boiler and an engine, and the whole machine must be placed upon one carriage. The problem for locomotive engineers is how to obtain the greatest possible power for the least possible weight. This is done by using small boilers of great strength, maximum heating surface, and maximum grate area, working at a high rate of evaporation, using steam of high pressures in small cylinders and running at high rotational speeds. The question of economy of steam is compromised for the sake of power combined with greatest possible reduction of weight. The engine and boiler are each bolted to the frame of the carriage. The frame is self-contained, and through it the whole of the stresses due to the pressure on the pistons and the pull on the draw-bar due to the load are transmitted.

It will be noticed that the axle of the trailing wheels is placed just behind the boiler, the axle of the driving-wheels just in front of the fire-box, leaving clearance for the cranks and connecting-rod heads.

The bogie carriage works on a pivot beneath the cylinders. The bogie wheels guide the engine and prepare the rails to receive the weight of the large driving-wheels; the hind, or trailing wheels, steady the engine, while the driving-wheels transmit the power of the engine to the rail, and they are placed as nearly as possible under the centre of gravity of the whole. The example has the slide-valve chest between the cylinders, and is fitted with the Stephenson link motion.

Plate IV. is a drawing [1] of a four-wheeled coupled express passenger engine for the Lancashire and Yorkshire Railway, and designed by Mr. J. A. F. Aspinall. Figs. 421, 422 and 423 are various views of the same engine. The cylinders are 18 in. in diameter by 26 in. stroke, the diameter of the bogie-wheels being 3 ft. $0\frac{3}{8}$ in., and the driving-wheels 7 ft. 3 in. The dimensions of the various parts of the engine are given on the drawings. The weight loaded on the bogie is 13 tons 16 cwt.; on the driving-wheels 16 tons 10 cwts.

[1] From the *Mechanical Engineer*, June 25, 1898.

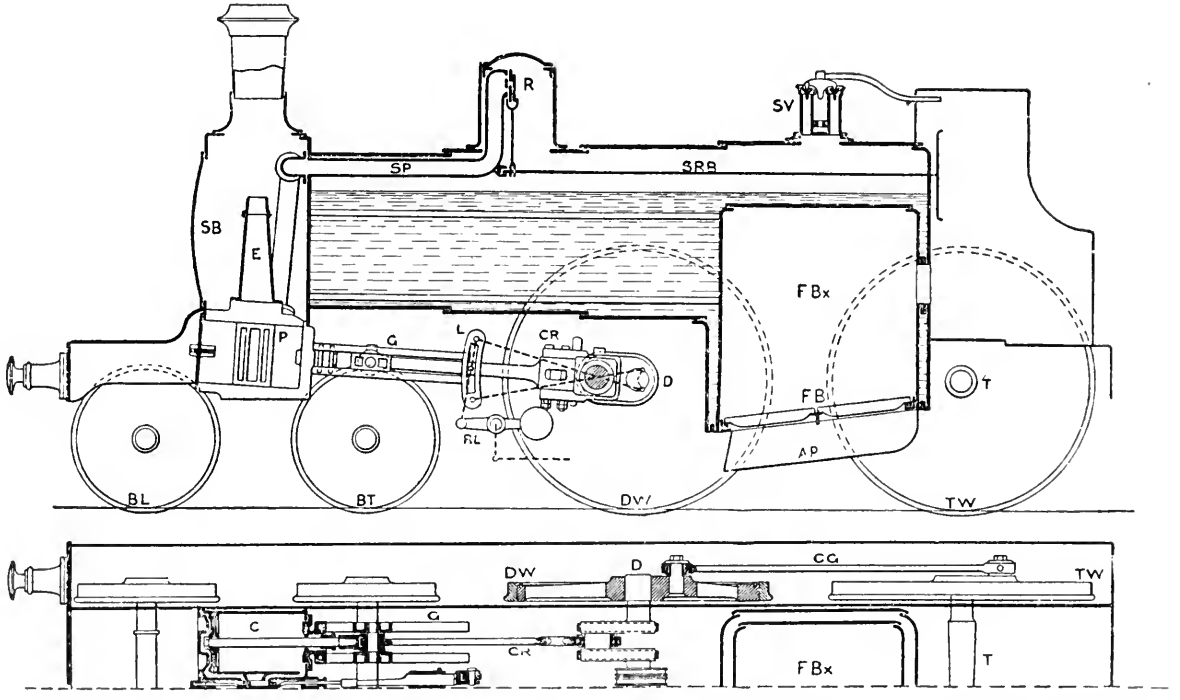

FIG. 420.—FBx, fire box; FB, fire bars; AP, ash pan; SB, smoke box; SV, safety-valve; R, steam regulator valve; SRB, steam regulator valve bar; SP, steam-pipe; E, exhaust pipe; P, steam-ports; G, guides; L, link motion; RL, reversing-lever; CR, connecting rod; C, cylinder; D, driving axle; T, trailing axle; DW, driving wheel; TW, trailing wheel; BL, bogie leading wheel; BT, bogie trailing wheel; CG, coupling rod.

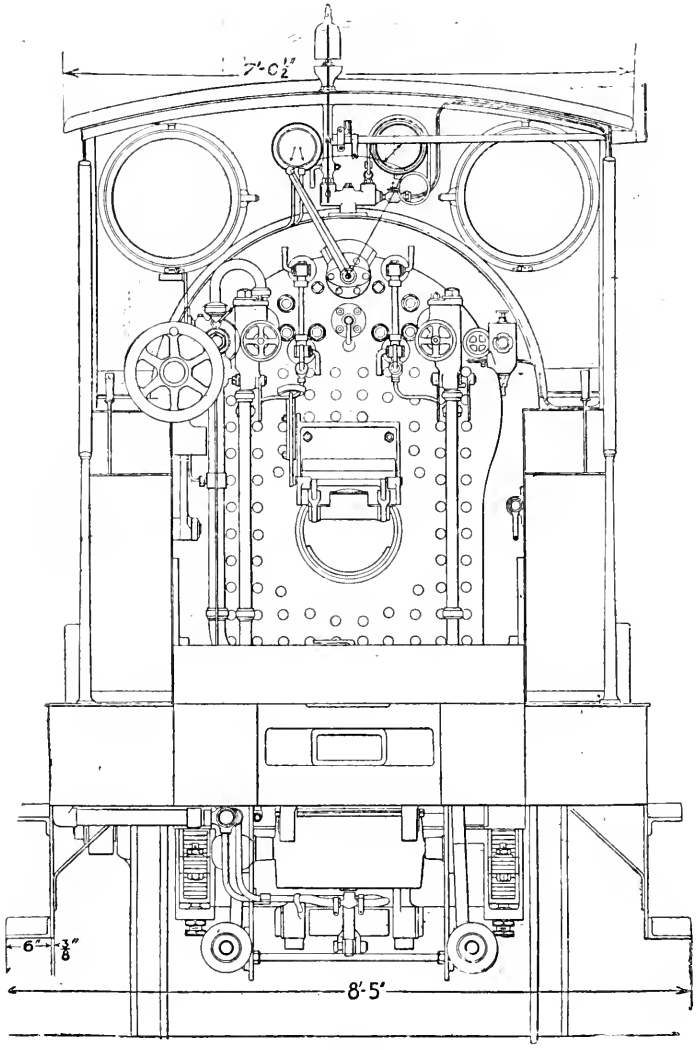

FIG. 421.

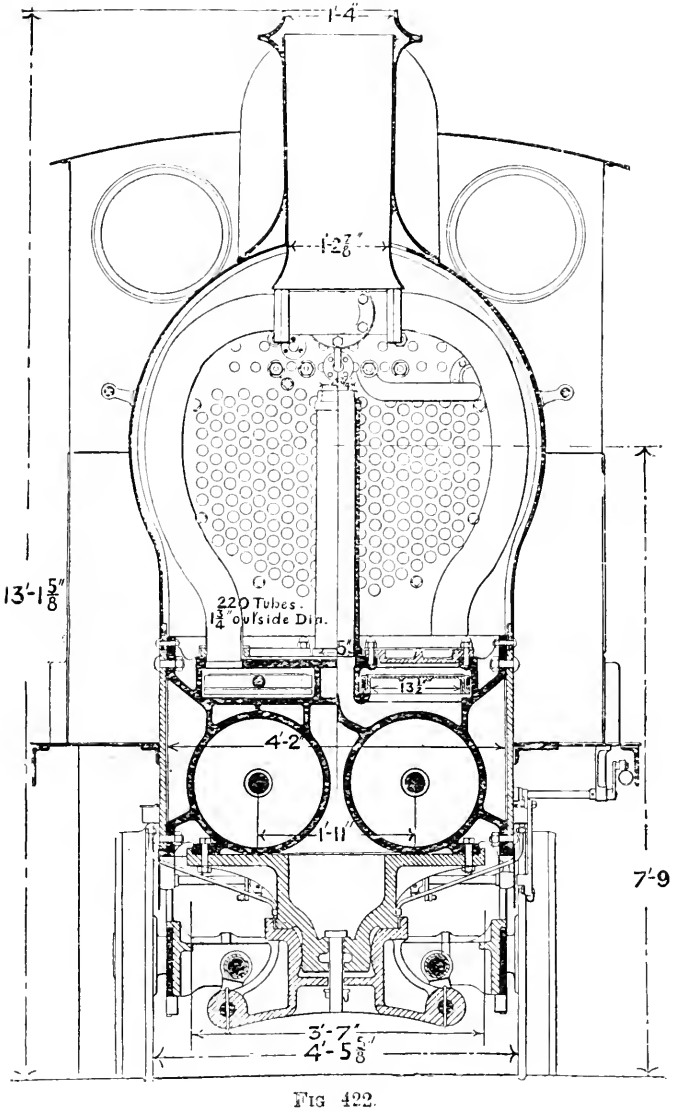
1'-4"
1'-2 7/8"
13'-1 5/8"
220 Tubes.
1 3/4" outside Dia.
5'
13 1/2"
4'-2"
1'-11"
7'-9
3'-7"
4'-5 5/8"

FIG 422.

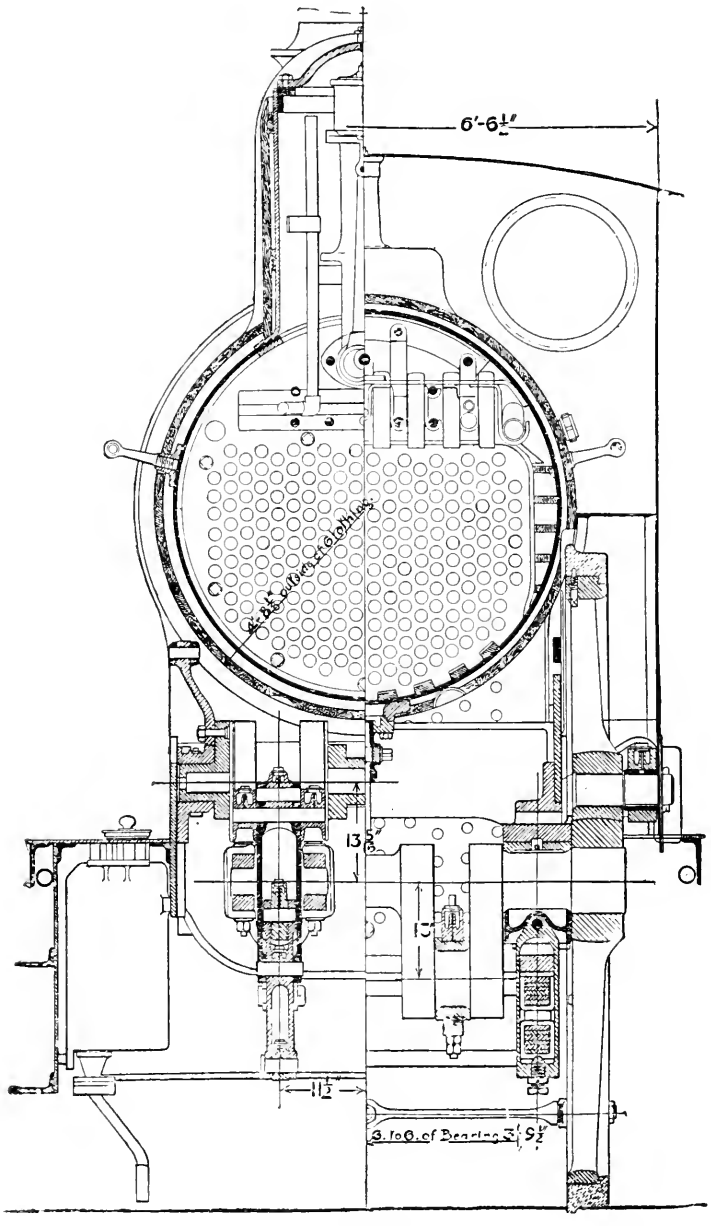

FIG. 423.

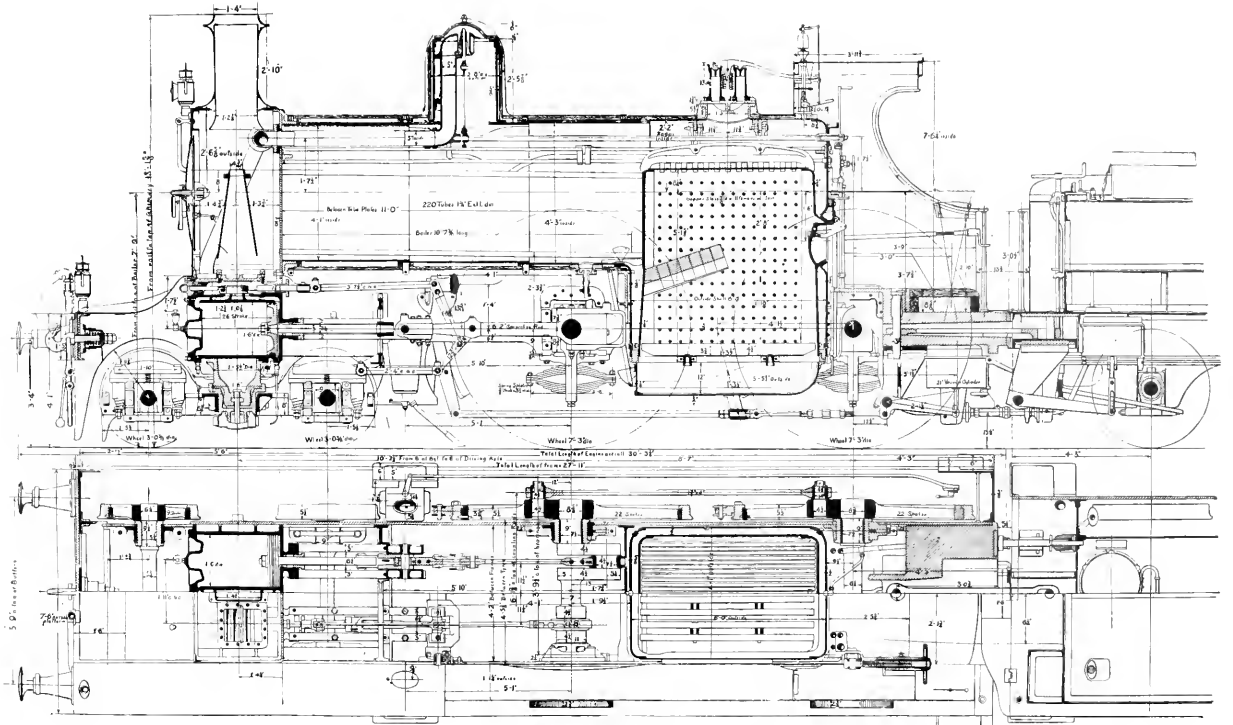

PLATE IV.—FOUR WHEELED-COUPLED EXPRESS PASSENGER ENGINE. L. & Y. RY.

[To face p. 372

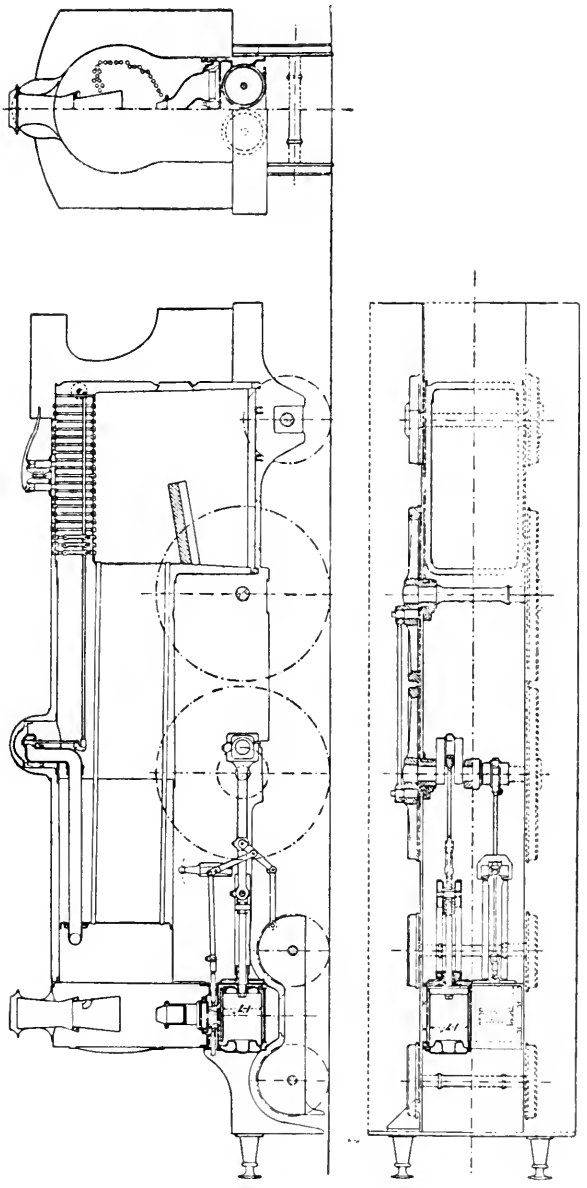

FIG. 424.—Express passenger engine, L. and Y. Railway.

and on the trailing wheels 14 tons 10 cwt.; making a total weight, exclusive of tender, of 44 tons 16 cwt.

The fire-box is of the ordinary type, the roof being carried by bridge-bars, supported by sling-stays from the crown of the fire-box casing. The sides are supported with copper-screwed stays having eleven threads to the inch and riveted over on the ends. The area of the fire-grate is $18\frac{3}{4}$ sq. ft. The barrel of the boiler is arranged in three plates telescopically, and measures 4 ft. 3 in. in diameter by 11 ft. between the tube-plates, there being two hundred and twenty tubes with an external diameter of $1\frac{3}{4}$ in.

The total heating surface of the tubes is 1108 sq. ft., and of the fire-box 107·6 sq. ft. There are two Ramsbottom duplex safety-valves fitted on the cover of the manhole mouthpiece, at the top of the fire-box casing. The valve gear is of the Joy's type. The slide-valve chests are above the cylinders, and thus permit of a maximum diameter for the cylinders.

Fig. 424 is an outline drawing of an exceptionally powerful type express passenger engine built for the Lancashire and Yorkshire Railway by Mr. J. A. F. Aspinall.

The special feature is the boiler, which is much larger than usual. The heating surface is 2052 sq. ft.; the grate area is 96·06 sq. ft.; driving-wheels 7 ft. diameter, coupled. The cylinders are 19 in. diameter by 26 in. stroke; length of steam-ports, 1 ft. 5 in.; width of steam-ports, $1\frac{5}{8}$ in.; lap of slide-valve, 1 in.; maximum travel of slide-valve, 5 in.; lead of slide-valve (constant), $\frac{3}{16}$ in. The valve-gear is Joy's.

Fig. 425 is an outline drawing of a North-Eastern express passenger engine by Mr. W. Worsdell. The engine has inside cylinders 20 in. diameter and 26 in. stroke.

Fig. 426 is an enlarged drawing of link-motion details for a locomotive.

Joy's Valve Gear.—This gear, as fitted to locomotives, is illustrated in Fig. 427. From point A in the connecting-rod, preferably about the middle motion is imparted to a vibrating link, B, constrained at its lower end to move in a vertical plane by the radius rod C. From a point D on this vibrating-link a lever, E, is attached to a centre or fulcrum, F. The lever E is extended beyond centre F to K, from which point the valve spindle is driven through the link G. The fulcrum F partakes of the vertical movement due to the oscillation of the connecting-rod in a vertical plane. To guide the centre or pin F in its vertical movement, it is carried by a block working in a slot, J, which is curved to a radius equal to the length of the link G. The slot itself is formed in a disc or block, which is pivoted on a centre which coincides with the centre F of the lever E at the moment when that lever is in the position due to the piston being at either end of the stroke. The disc or block containing the slot is capable of being partially rotated on its centre or pivot, so as to incline the slot over to either side of the vertical by means of the lever M, thereby causing the curved path traversed by the centre F of the lever E

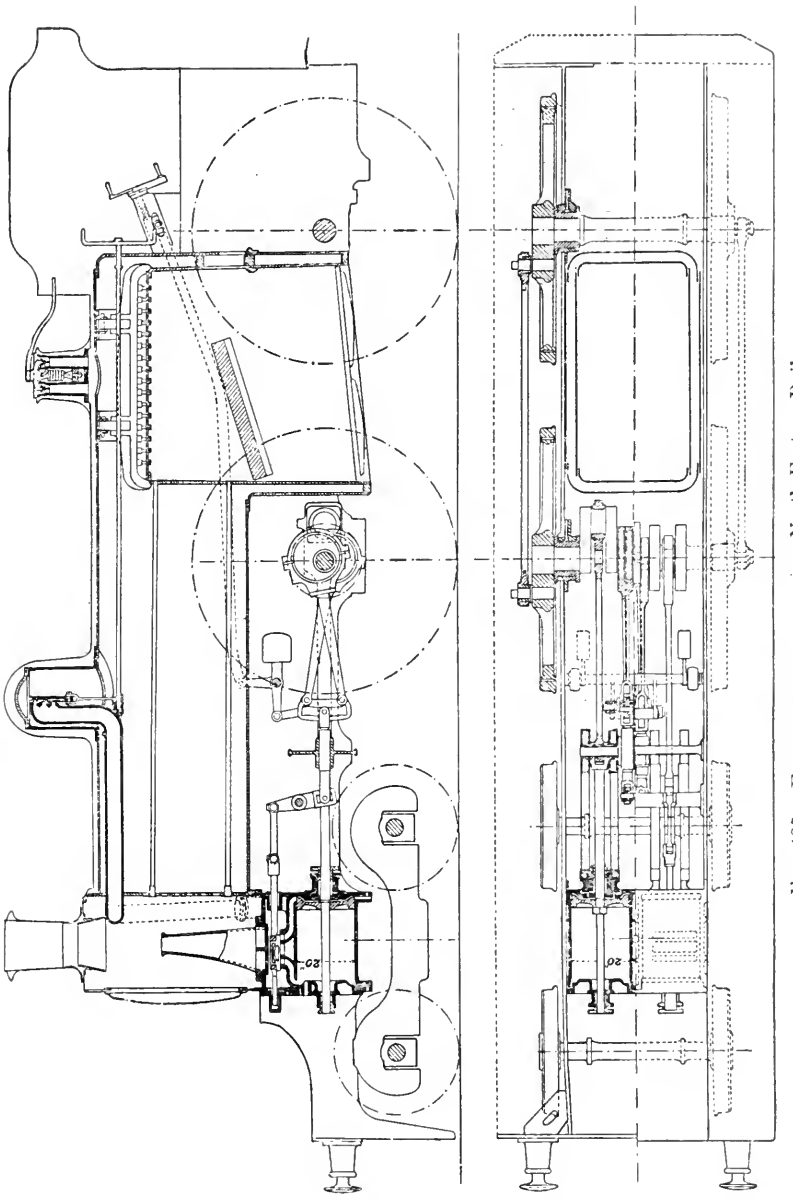

FIG. 425.—Express passenger engine, North-Eastern Railway.

to cross the vertical arc, and thereby give the valve spindle the required horizontal movement.

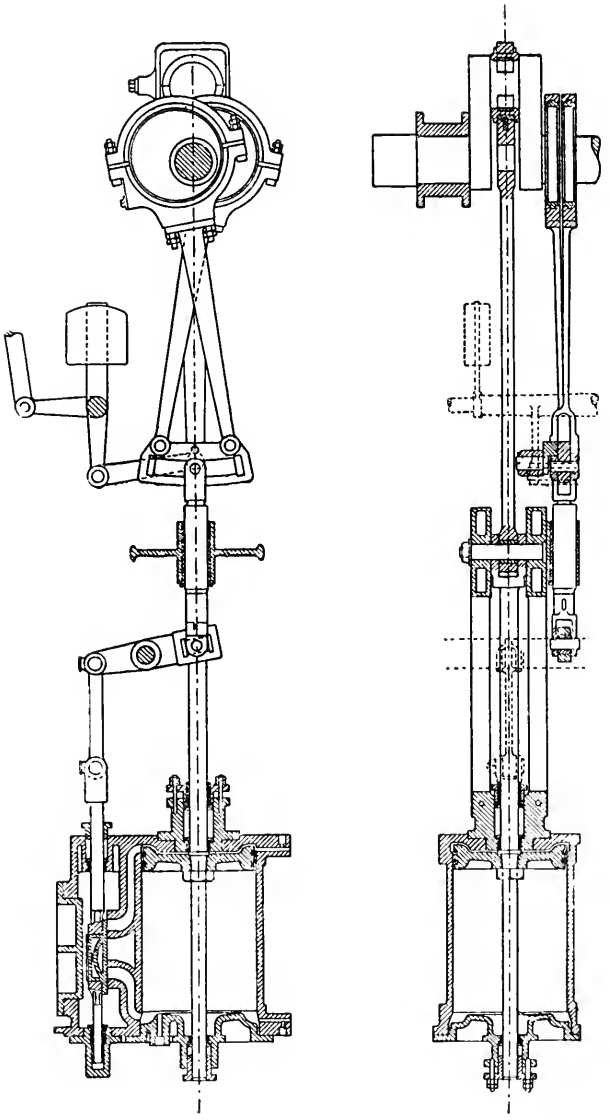

FIG. 426.

The forward or backward motion of the engine is determined by

giving the slot an inclined position on one or other side of the vertical line as required.

When the slot is in an exactly central position, this position is mid-gear travel of the valve, and the steam is admitted at each end of the stroke through a port-opening equal to the amount of the lead. With this gear the lead is constant for forward and backward strokes, and for all degrees of expansion. For when the engine-crank is set at the end of the stroke, either way, the centre F of the valve lever E coincides with the centre of the slot, and therefore the slot may be rotated on its pivot from forward to backward gear without affecting the position of the valve.

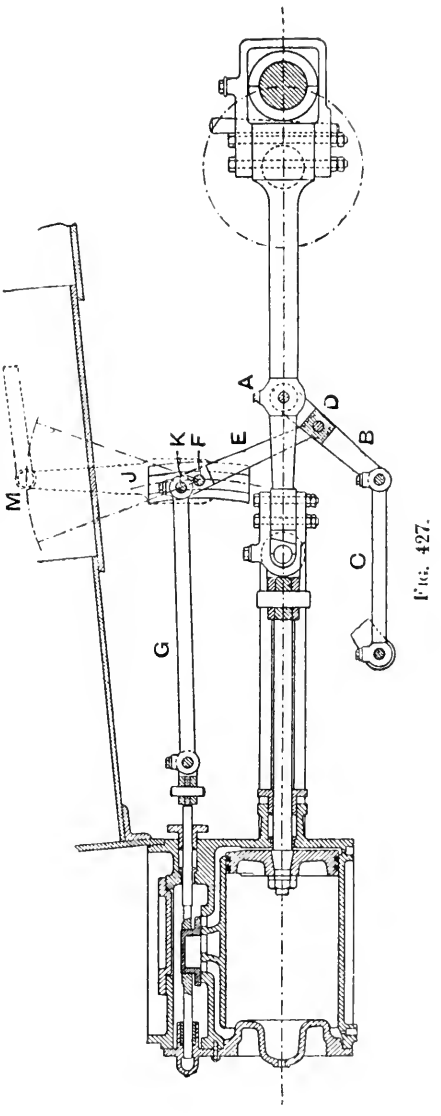

FIG. 427.

Fig. 428 is an enlarged view of the steam regulator-valve of the equilibrium type, as used for admitting steam to the engine.

Fig. 429 is an enlarged detail drawing of a Ramsbottom safety-valve as used on locomotives.

Train resistance consists of (1) Resistance due to friction —this is much modified by the effect of wind and curves; (2) resistance due to gravity.

A formula for *train resistance due to friction*, based on the results of experiments, is given by Messrs. Pettigrew and Ravenshear [1] as follows:—

$$R = 9 + 0{\cdot}007\ V^2$$

where R = resistance in lbs. per ton, and
V = velocity in miles per hour.

[1] "Manual of Locomotive Engineering," p. 77

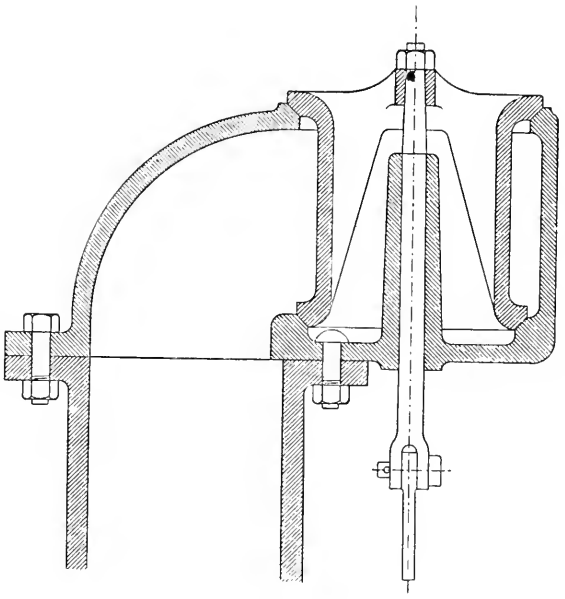

FIG. 428.

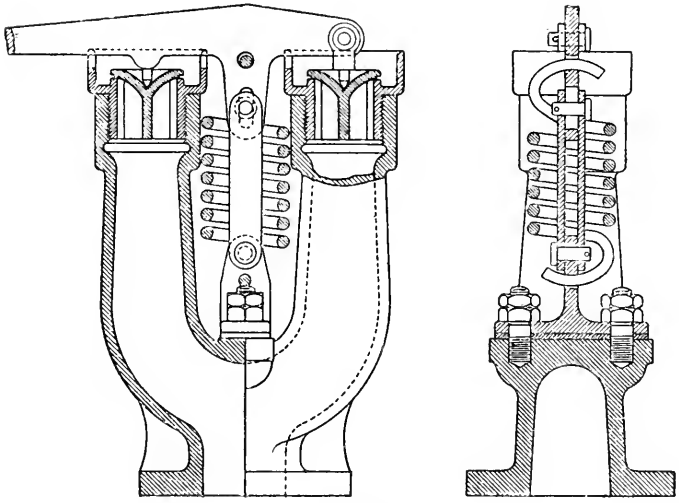

FIG. 429.

Resistance due to Gravity.—The work done by a locomotive in climbing an incline is found thus: Let the line *de* (Fig. 430) make an angle θ with the horizontal line *fe*. Draw a vertical line *ab* through the centre of gravity of the weight = W, and draw *ac* at right angles and *cb* parallel to *de*. Then *ac* is the reaction of the plane, and *cb* is the tractive force required. But triangles *def* and *bac* are similar;

$$\text{therefore } \frac{df}{de} = \frac{bc}{ab} = \frac{\text{tractive force}}{\text{load}}$$

$$\text{or, tractive force} = \text{resistance} = \text{load} \times \sin\theta$$

The total resistance R′ to be overcome is equal to the sum of the resistances due to friction and gravity respectively; thus:

$$R' = (9 + 0{\cdot}007\,V^2) + 2240 \sin\theta$$

where $\sin\theta = \dfrac{\text{vertical rise}}{\text{length of incline}}$

and R′ = lbs. per ton of load.

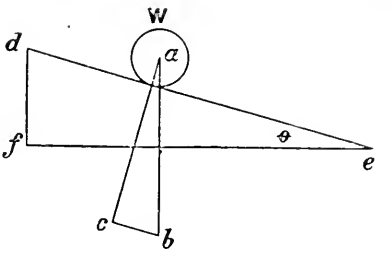

Fig. 430.

Tractive Force of Locomotives.—The power of the pair of engines with cylinders of equal diameter and stroke, such as are used in non-compound locomotives, is estimated as for any ordinary case, but the tractive force which can be transmitted will depend upon the diameter of the driving-wheel and the force of adhesion of the wheel and rail.

$$\text{Work done in one cylinder during one revolution} = 2\left(\frac{\pi}{4}d^2Lp\right)$$

where d = diameter of cylinder in inches;
L = length of stroke in feet;
p = effective mean pressure of steam per square inch.

$$\text{Work done in two cylinders during one revolution} = \pi d^2 L\, p$$

And this work per revolution is equal to the tractive force T × circumference πD of driving-wheel;

$$\text{therefore } \pi d^2 L\, p = T\pi D$$

$$\text{or, } T = \frac{d^2 L p}{D}$$

where the values of L and D are both in the same terms. This is the formula for the tractive force exerted by an engine; thus, for cylinder of 18 in. diameter, 26 in. stroke, and 7 ft. driving-wheels—

$$\text{Tractive force} = \frac{18 \times 18 \times 26}{84} = 100{\cdot}28 \text{ lbs.}$$

per 1 lb. mean effective pressure of steam on the pistons.

The force which can act through the wheel depends upon the adhesion of the wheel to the rail, and this is proportional to the weight W on the driving-wheel, other things being equal. W is

the share of the weight of the engine carried by the driving-wheels, in a single driving-wheel engine, but by coupling the driving-wheels to two or more wheels on each side of the engine, the adhesion will be due to the sum of the weights on the coupled wheels.

Performance of Locomotives.—The following particulars are from tests recently made of a London and South-Western express engine :[1]—

Class of engine	4 wheels coupled
Diameter of driving-wheels	85 in.
„ cylinders	19 „
Stroke	26 „
Mean boiler-pressure	167·5 lbs.
Grate area	18·14 sq. ft.
Coal burnt per square foot of grate area per hour	62·54 lbs.
„ „ I.H.P. per hour	2·31 „
Calorific value of 1 lb. of coal	13,903 B.T.U.
Water evaporated per pound of coal	9·232 lbs.
„ „ from and at 212°	11·35
Feed temperature	61° F.
Maximum I.H.P.	684·1
Mean I.H.P.	490·6
Maximum vacuum at base of chimney	8·5 in.
Mean „ „ „	4·93 „
Maximum temperature of smoke-box gases ...	585° F.
Mean „ „ „ ...	488·9° F.
Mean „ air-box gases	68°
Back pressure at maximum I.H.P.	10 lbs. per sq. in.
„ „ „ speed	5·38 „

The average steam-consumption given in Mr. Drummond's trials of non-compound locomotives are—

24 lbs. per I.H.P. per hour at 150 lbs. pressure.
18·3 lbs. per I.H.P. per hour at 200 lbs. pressure.

Mr. S. Johnson[2] gives particulars of a trial of a single driving-wheel locomotive on the Midland Railway, showing that the engine burns 2·9 to 3·1 lbs. of coal, and uses 29 lbs. of water per I.H.P. per hour when the horse-power is 400.

Some extremely interesting experiments with a locomotive have been performed at the experimental laboratory of the Purdue University by Professor W.F.M. Goss and his staff. The locomotive used was built at the Schenectady Locomotive Works, and it has cylinders 17 in. diameter and 24 in. stroke.

The power of this engine while running under a full throttle and with a boiler-pressure of 130 lbs. is shown by the following table :—

[1] *Proceedings Inst. C.E.*, vol. cxxv. See also Messrs. Pettigrew and Ravenshear's "Manual of Locomotive Engineering."
[2] Presidential address, Inst. Mech. Engrs., 1898.

INDICATED HORSE-POWER AT DIFFERENT SPEEDS AND DIFFERENT CUT-OFFS. BOILER-PRESSURE, 130 LBS.; THROTTLE FULLY OPEN.

Speed in miles.	Revolutions per minute.	Indicated Horse-power at the following cut-offs :—		
		6 in.	8 in.	10 in.
15	81	190	270	—
25	135	223	368	455
35	188	298	431	501
45	242	302	437	—
55	296	292	438	—

"The power of any locomotive is limited at low speed by its adhesion; at higher speeds by the capacity of its boiler."

An important point to which Professor Goss calls attention is the relation between the speed of a locomotive and its effect upon the mean effective pressure in the cylinder. This is shown in the following table:—

MEAN EFFECTIVE PRESSURE AT DIFFERENT SPEEDS AND DIFFERENT CUT-OFFS. BOILER-PRESSURE, 130 LBS.; THROTTLE FULLY OPEN.

Speed in miles.	Revolutions per minute.	Mean effective pressure at the following cut-offs :—		
		6 in.	8 in.	10 in.
15	81	43·5	61·9	—
25	135	30·5	51·2	63·3
35	188	29·6	42·4	48·0
45	242	23·2	33·2	—
55	296	18·3	27·4	—

These two tables show "that the power of the engine tested increases with increase of speed up to about 35 miles per hour (188 revolutions per minute). Above this limit the power remains practically constant."

The reason of this is, of course, that as the speed increases the mean pressure of the steam in the cylinder at the same time falls, and the product of mean pressure and piston speed is about constant above a certain speed.

With regard to the steam-consumption of locomotives, Professor Goss gives the following table:—

STEAM-CONSUMPTION PER INDICATED HORSE-POWER PER HOUR AT DIFFERENT SPEEDS AND DIFFERENT CUT-OFFS.

Speed in miles.	Revolutions per minute.	Steam-consumption in pounds per I.H.P. per hour.		
		Cut-off in inches of stroke.		
		6 in.	8 in.	10 in.
15	81	28·93	27·66	—
25	135	28·06	26·60	28·6
35	188	26·93	26·28	30·1
45	242	28·60	28·45	—
55	296	30·64	32·00	—

The **compound locomotive** has made some progress in recent years, especially on the Continent and in Amercia, but it has not, so far, been very generally adopted in this country.

The most notable exceptions to this statement are the engines built by Mr. Webb for the London and North-Western Railway, and those by Mr. T. W. Worsdell for the Great Eastern and North Eastern Railways.

Fig. 431 illustrates the **Webb compound** three-cylinder engine, consisting of two outside high-pressure cylinders 14 in. diameter and 24 in. stroke, which drive outside cranks on the trailing wheels; and one large low-pressure inside cylinder 30 in. diameter and 24 in. stroke, placed between the frames and below the smoke-box, driving on to the single crank-axle of the middle pair of wheels.

More recently Mr. Webb has designed an engine with four cylinders (Fig. 432), two outside high-pressure cylinders 15 in. diameter, and two inside low-pressure cylinders $16\frac{1}{2}$ in. diameter. All the cylinders are 24 in. stroke. These are all situated in a line below the smoke-box, and all drive on to one axle. There are two coupled pairs of wheels 7 ft. 1 in. diameter.

Various experiments have been carried out, proving generally the superior economy of the compound engine, varying in amount of from 9 to 17 per cent. or more. But less convenience and promptness in handling, are stated as reasons for the general preference for the simple type.

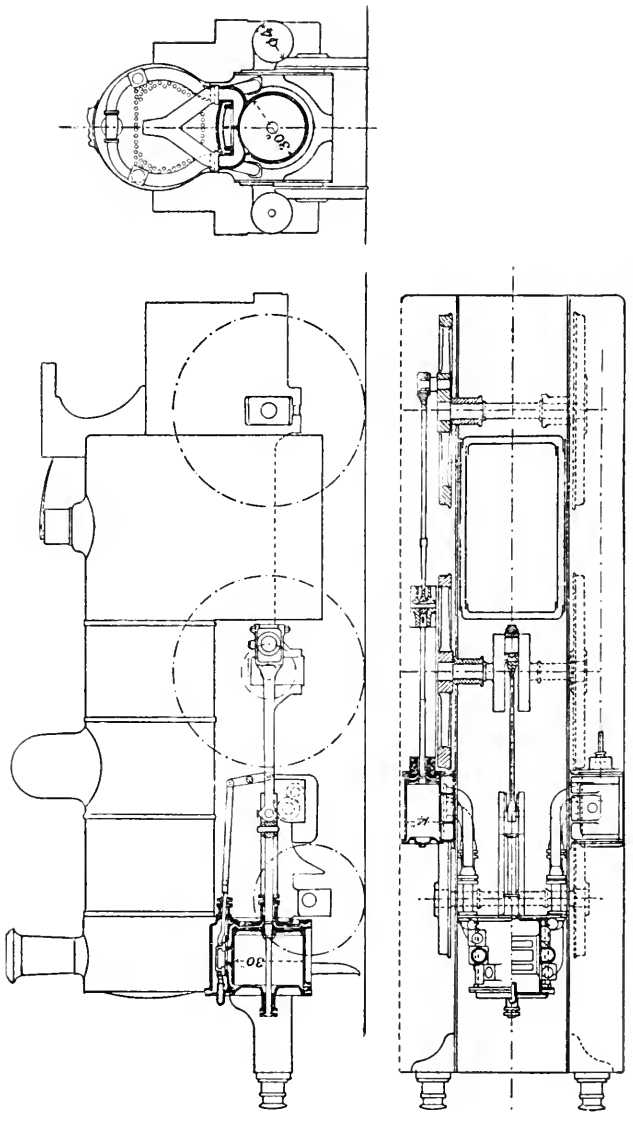

FIG. 431.—Express locomotive—Webb three cylinder compound, L. and N.W. Railway

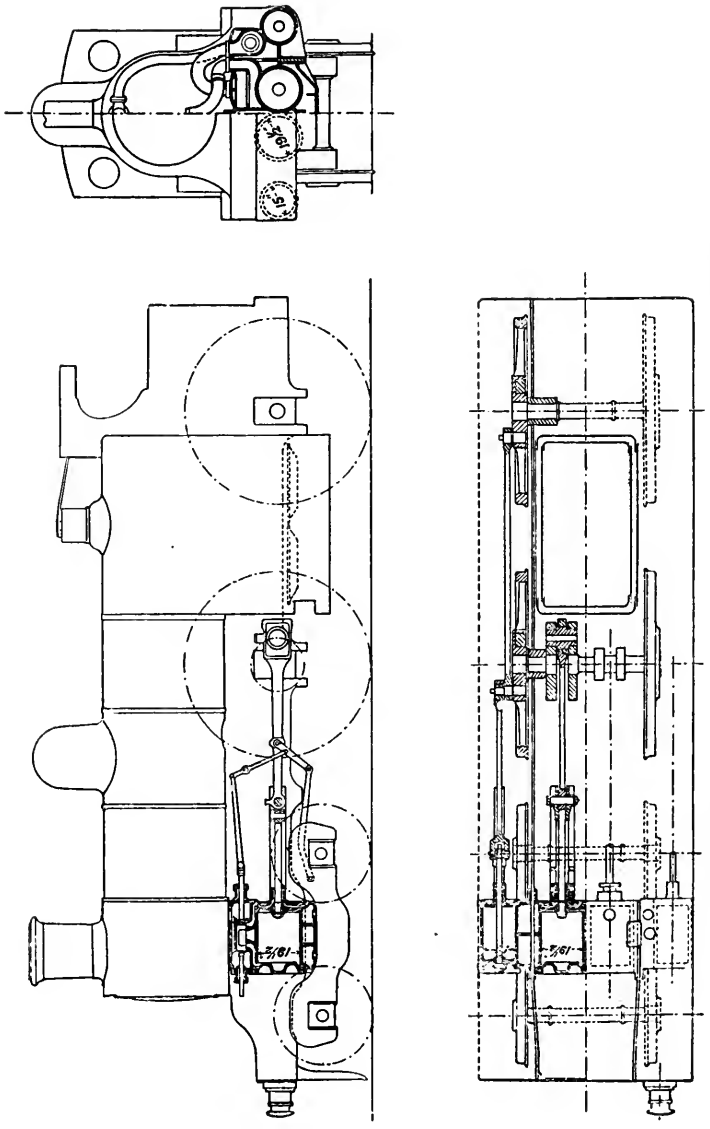

Fig. 432.—Express locomotive—Webb four-cylinder compound, L. and N.W. Railway.

CHAPTER XXVI.

THE STEAM TURBINE.

The introduction of the dynamo was the beginning of a demand for high speed of rotation of prime movers. Originally the dynamo ran much faster than the engine which drove it, and a belt connection between the engine and dynamo was always resorted to. The problem at that time for dynamo designers was how to design a dynamo which could run direct-coupled to the slow-revolution engine, and the solution resulted in designs having extremely large diameters. At the same time, by the efforts of Willans, Belliss, and many others, the high-speed or quick-revolution engine was introduced, which ran at such a speed that dynamos of moderate dimensions could be direct-coupled to the engine driving them.

Meanwhile, many engineers and inventors were working on the idea of a steam turbine which should be capable of doing work on a practical scale by the kinetic energy of steam issuing from a jet at high velocity. With the success of these efforts the problem was entirely reversed, and it now became the question how to design a dynamo which should be efficient at the extremely high rate of rotation of the turbine spindle, an even more difficult problem than the first one for continuous-current work.

All these designs of low and high rates of rotation have their advantages and their limitations, but there is probably a field for all of them, each in its way being more suitable than the others under certain conditions.

At the lower powers the reciprocating engine will, no doubt, hold its own, but for the highest powers the steam turbine, for certain classes of work, appears to be gradually superseding the reciprocating engine.

Among the most successful practical designs of steam turbines now in use in this country may be mentioned the Parsons, the De Laval, the Westinghouse-Parsons, and the Curtis.

Action of a Jet upon the Vanes of a Turbine.—Considering first the simple case of a jet of water impinging on a series of flat vanes, as in a water-wheel, the jet striking the vanes at right angles to their surface.

Here the function of the vane is to change the direction of flow

of the jet, the pressure on the vane being due to the change of momentum of the fluid mass. In Fig. 433 the fluid, after impact, flows away in a direction at right angles to the surface, and the pressure or impulse of the jet upon the vane is equal to the change of momentum per second—

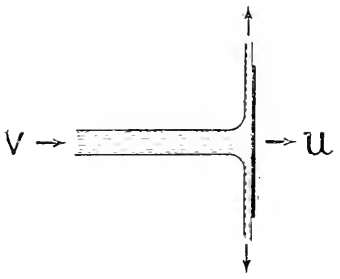

Fig. 433.

$$= \frac{W}{g}(v - u) \text{ lbs.} \quad . \quad . \quad \text{(i.)}$$

where v is the velocity of the jet, u is the velocity of the wheel, and W is the weight of water impinging per second.

$$\text{The work done per second} = \frac{W}{g}(v - u)u \text{ ft.-lbs.} \quad \text{(ii.)}$$

$$\text{and the total kinetic energy of the jet} = \frac{Wv^2}{2g} \quad . \quad . \quad . \quad . \quad \text{(iii.)}$$

therefore the efficiency of the arrangement = E = (ii.) ÷ (iii.)

$$= 2u\frac{(v - u)}{v^2} \quad . \quad . \quad \text{(iv.)}$$

Differentiating we have—

$$\frac{dE}{du} = \frac{2}{v} - \frac{4u}{v^2}$$

Equating to 0 to find the condition of maximum efficiency, we have—

$$\frac{2}{v} - \frac{4u}{v^2} = 0, \text{ or } u = \frac{v}{2}$$

that is, the efficiency becomes a maximum when the peripheral velocity of the wheel is one-half the velocity of the jet.

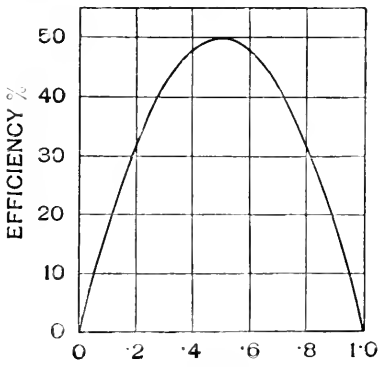

Fig. 434.

Example.—Let a jet with an initial velocity of 200 ft. per second impinge on the vanes of a wheel, and let the weight of fluid discharged from the jet be 10 lbs. per second.

Then the kinetic energy of the jet $= \frac{Wv^2}{2g} = \frac{10 \times 200 \times 200}{2 \times 32{\cdot}2}$

$= 6211$ foot-lbs.

Taking various values for u, namely, $\frac{v}{1{\cdot}5}$, $\frac{v}{2}$, $\frac{v}{2{\cdot}5}$, etc., calculating efficiencies and plotting, we obtain the curve as in Fig. 434, showing that the maximum efficiency is obtained when $u = \frac{v}{2}$.

$$\text{Thus, when } u = \frac{v}{2{\cdot}5}$$

$$\text{work done on the vanes} = \frac{W}{g}(v - u)u$$

$$= \frac{10}{g}(200 - 80)80 \text{ foot-lbs.}$$

$$= 2981 \text{ foot-lbs.}$$

$$\text{and efficiency} = \frac{2981}{6211} = 0{\cdot}48$$

The maximum efficiency is 50 per cent., which is the best that can be obtained with this shape of vane.

The motion of a fluid flowing in contact with a moving vane may be resolved into—

1. A motion equal to that of the vane, and in the same direction.
2. A motion relative to the surface of the vane.

The motion of the fluid relative to the surface of the vane may be altered in direction but not in magnitude. In the case, however, of steam or expanding gases, motion relative to the surface of the vane may be altered both in direction and magnitude.

The motion relative to the vane is parallel to the surface, and, neglecting friction, is constant for fluids.

The pressure between fluid and surface is normal to the surface.

FIG. 434A.

When a jet flows on to a surface, and is thereby deflected through a given angle θ, the impulse F acting in the original direction of the stream is given by the formula—

$$F = \frac{Wv}{g}(1 - \cos \theta) \quad . \quad . \quad . \quad . \quad . \quad . \quad . \quad (v.)$$

This expression represents the change of momentum of the mass.

Thus, when the jet is deflected through an angle of 90°, then—

$$F = \frac{Wv}{g}(1 - \cos \theta)$$

$$= \frac{Wv}{g}(1 - 0)$$

$$= \frac{Wv}{g} \quad . \quad . \quad . \quad . \quad . \quad . \quad . \quad . \quad . \quad . \quad (vi.)$$

The stream has now no velocity in the original direction. When the angle of deflection is greater than 90°, as in Fig. 434B, then—

$$F = \frac{Wv}{g}\{1 - \cos(180^\circ - \theta)\}$$
$$= \frac{Wv}{g}\{1 - (-\cos\theta)\}$$
$$= \frac{Wv}{g}(1 + \cos\theta) \quad . \quad . \quad . \quad . \quad . \quad . \quad \text{(vii.)}$$

Showing that a bending back of the stream through an angle greater than 90° gives an impulse greater than that obtained when the angle is less than 90°.

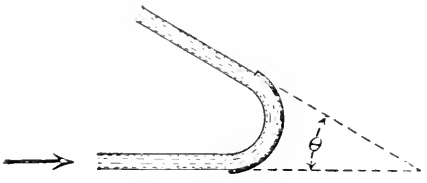

FIG. 434B.

When the stream leaves the surface of the blade in a direction exactly opposite to that which it had on entering, then—

$$\cos\theta = \cos 180^\circ = 1$$

and
$$F = \frac{Wv}{g}(1 + 1) = \frac{2Wv}{g} \quad . \quad . \quad . \quad . \quad . \quad \text{(viii.)}$$

That is, the impulse is double that in case (vi.).

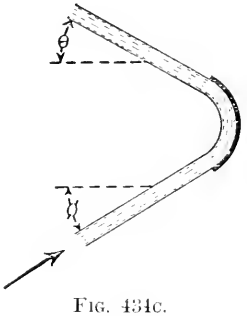

FIG. 434C.

In practice that condition cannot be entirely fulfilled, because of the necessity for getting the fluid into and out of passages freely, and the angle of the surface of the blades both for inlet and outlet edges is therefore opened out not less than 20° (see Fig. 434C).

In this case—

$$F = \frac{Wv}{g}(\cos\theta + \cos\phi) \quad . \quad \text{(ix.)}$$

Taking now a vane cup-shaped, as in the Pelton wheel, we have the water leaving the vane in a direction exactly opposite to that of the original jet; the velocity of the jet relatively to the wheel is $(v - u)$ when entering the wheel, and $-(v - u)$ when leaving it. The absolute velocity of the jet when leaving the wheel $= u - (v - u) = 2u - v$. Then the pressure or impulse on the vanes of such a wheel is equal to the change of momentum per second.

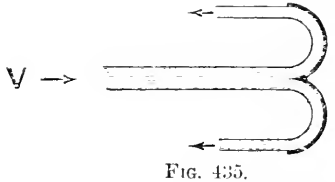

FIG. 435.

$$\frac{W}{g}\{v-(2u-v)\}=2\frac{W}{g}(v-u)\text{ lbs.}\quad\ldots\quad(x.)$$

$$\text{and the work done per second}=2\frac{W}{g}(v-u)u\text{ foot-lbs.}\quad(xi.)$$

$$\text{the efficiency E}=\left\{2\frac{W}{g}(v-u)u\right\}\div\frac{Wv^2}{2g}$$

$$=\frac{4(v-u)u}{v^2}\quad\ldots\quad(xii.)$$

$$\text{If } u=\frac{v}{2}$$

$$\text{then }\frac{4(v-u)u}{v^2}=1$$

that is, if the peripheral velocity of the wheel is half the velocity of the jet, then, with the semicircular cup-shaped vane, the efficiency is unity, or 100 per cent.

Comparing equations (i.), (ii.), and (iv.) with equations (x.) (xi.), and (xii.), we see that the pressure on the vane, the work done, and the efficiency of the semicircular vane are in each case double that with the flat vane.

Pressure Head and Kinetic Head.—It has been already shown (p. 14) that when gas or steam at a pressure p_1 acts upon a piston against a back pressure p_2, the work done during admission and expansion—

$$=\frac{n}{n-1}p_1r_1\left\{1-\left(\frac{p_2}{p_1}\right)^{\frac{n-1}{n}}\right\}$$

When steam at a pressure p_1 meets with no resistance to its flow, but is allowed to flow freely from pressure p_1 to pressure p_2, the energy is absorbed in giving motion to the steam, the "pressure head" is converted into "kinetic head," and the velocity of the flow is accelerated.

These two forms of energy are interchangeable—in other words, the loss of pressure head is equal to the gain of kinetic head. Thus—

$$\text{kinetic head}=\text{pressure head}$$

$$\frac{V^2}{2g}=\frac{n}{n-1}p_1r_1\left\{1-\left(\frac{p_2}{p_1}\right)^{\frac{n-1}{n}}\right\}$$

In the reciprocating engine work is done by means of "pressure head;" in the steam turbine work is done by means of "kinetic head." Given equal efficiency of machines, the work which may be done theoretically by the two modes of application of the steam is equal. In practice, there are sources of loss of efficiency in both reciprocating engines and turbines, but there are reasons for concluding that, at least for higher powers, the turbine is the more efficient machine.

Velocity of the Steam.—To determine the dimensions of the

turbine to deal with a given weight of steam, it is necessary to know the velocity acquired by the steam due to the liberated energy for a given fall of pressure; also to know the change in specific volume due to the same change of pressure.

The velocity (V) of the steam for a given fall of pressure p_1 to p_2 may be obtained from the following equation, which is deduced from the equation above:—

$$V = \sqrt{\frac{2gn}{n-1} p_1 v_1 \left\{1 - \left(\frac{p_2}{p_1}\right)^{\frac{n-1}{n}}\right\}}$$

Example 1.—Find the velocity acquired by steam at an initial pressure of 150 lbs. per square inch absolute, falling freely to a pressure of 15 lbs. abs.

$$\begin{aligned} V &= \sqrt{\frac{2gn}{n-1} p_1 v_1 \left\{1 - \left(\frac{p_2}{p_1}\right)^{\frac{n-1}{n}}\right\}} \\ &= \sqrt{\frac{2 \times 32{\cdot}2 \times 1{\cdot}135}{1{\cdot}135 - 1} \times 150 \times 144 \times 3{\cdot}011 \left\{1 - \left(\frac{15}{150}\right)^{\frac{1{\cdot}135-1}{1{\cdot}135}}\right\}} \\ &= \sqrt{\frac{64{\cdot}4 \times 1{\cdot}135}{0{\cdot}135} \times 150 \times 144 \times 3{\cdot}011 \times 0{\cdot}2414} \\ &= 2916 \text{ ft. per second} \end{aligned}$$

Example 2.—Find the velocity acquired by steam at an initial pressure of 150 lbs. per square inch absolute, falling freely to a pressure of 1 lb. abs.

$$\begin{aligned} V &= \sqrt{\frac{2gn}{n-1} p_1 v_1 \left\{1 - \left(\frac{p_2}{p_1}\right)^{\frac{n-1}{n}}\right\}} \\ &= \sqrt{\frac{2 \times 32{\cdot}2 \times 1{\cdot}135}{1{\cdot}135 - 1} \times 150 \times 144 \times 3{\cdot}011 \left\{1 - \left(\frac{1}{150}\right)^{\frac{1{\cdot}135-1}{1{\cdot}135}}\right\}} \\ &= \sqrt{\frac{64{\cdot}4 \times 1{\cdot}135}{0{\cdot}135} \times 150 \times 144 \times 3{\cdot}011 \times 0{\cdot}4519} \\ &= 3989 \text{ ft. per second} \end{aligned}$$

A more accurate method of determining the steam velocity V is to equate the kinetic energy to the change of internal heat energy in the steam. Thus, in falling from pressure p_1 to p_2 without resistance, the work done in generating velocity in the steam is equal to the difference of heat energy in the steam before and after the expansion (see pp. 55, 56)—

$$\text{or } \frac{V^2}{2g} = J(h_1 - h_2 + x_1 L_1 - x_2 L_2)$$

Assuming the steam dry to begin with, and its initial velocity at p_1 equal to zero, then—

$$\text{its velocity at } p_2 = V = \sqrt{2gJ(h_1 - h_2 + L_1 - x_2 L_2)}$$

where x_2 is the dryness fraction of the steam after expansion (p. 44)—

$$x_2 = \left(\log_e \frac{T_1}{T_2} + \frac{L_1}{T_1}\right)\frac{T_2}{L_2}$$

EXAMPLE.—Let dry saturated steam at an initial pressure of 150 lbs. abs. expand adiabatically to 15 lbs. abs.; then the heat converted into the work of generating kinetic energy is obtained as follows:—

$$\text{First find } x_2, \text{ which} = \left(\log_e \frac{T_1}{T_2} + \frac{L_1}{T_1}\right)\frac{T_2}{L_2}$$

$$\text{(From the tables) } x_2 = \left(\log_e \frac{819}{674} + \frac{861}{819}\right)\frac{674}{965} = 0{\cdot}874$$

The value of x_2 may be obtained by direct measurement from the temperature-entropy chart (Plate I.), as explained on pp. 44, 45.

$$\text{Then for steam at } p_1 = 150,\ h_1 + L_1 = 1191{\cdot}2$$
$$\text{,,} \qquad \text{,,} \qquad p_2 = 15,\ h_2 + x_2 L_2 = 181{\cdot}8 + 0{\cdot}874 \times 965{\cdot}1$$
$$= 1025{\cdot}3$$
$$\text{Then heat converted into work} = 1191{\cdot}2 - 1025{\cdot}3$$
$$= 165{\cdot}9 \text{ B.T.U.}$$

And velocity V generated in the steam at pressure p_2, assuming all the energy is used in accelerating the steam, also that the initial velocity = 0, is obtained as follows:—

$$V = \sqrt{2gJ \times 165{\cdot}9}$$
$$= \sqrt{64{\cdot}4 \times 778 \times 165{\cdot}9}$$
$$= 2882 \text{ ft. per second}$$

Since $\sqrt{2gJ} = 223{\cdot}8$, the expression for velocity may be written—

$$V = 223{\cdot}8\sqrt{\text{B.T.U.}}$$

or if the steam velocity be divided into a number of stages n, then the velocity V_1 of the steam at each stage =

$$V_1 = 223{\cdot}8\sqrt{\frac{\text{B.T.U.}}{n}}$$

Fig. 436 shows a curve of heat units liberated for a given fall of pressure from $p_1 = 10$ atmospheres downwards. The ordinates are heat units, and the abscissæ pressures per square inch in atmospheres.

In Fig. 437, the upper curve (starting from 10 and passing through K and L) is a curve of velocities, V, upon a pressure base, showing how for a given fixed pressure p_1, here taken at 10 atmospheres per square inch absolute, the velocity of a freely flowing current of steam increases as the pressure p_2 is reduced.

The way in which the kinetic energy of the steam is applied differs with different designs of turbines: thus, (1) the steam may be allowed to fall at once through the whole range of pressure in the nozzle, after which the steam at its maximum velocity is directed upon the vanes

of a single turbine wheel, as in the case of the De Laval turbine; or (2) the steam may act by a series of successive small reductions of pressure upon a number of successive alternating fixed guide-blades and turbine wheels upon a single axis, each separate wheel dealing with a limited portion of the pressure range, as in the case of the Parson's turbine; or (3) any combination of these methods, as, for example, the Rateau and the Curtis turbines.

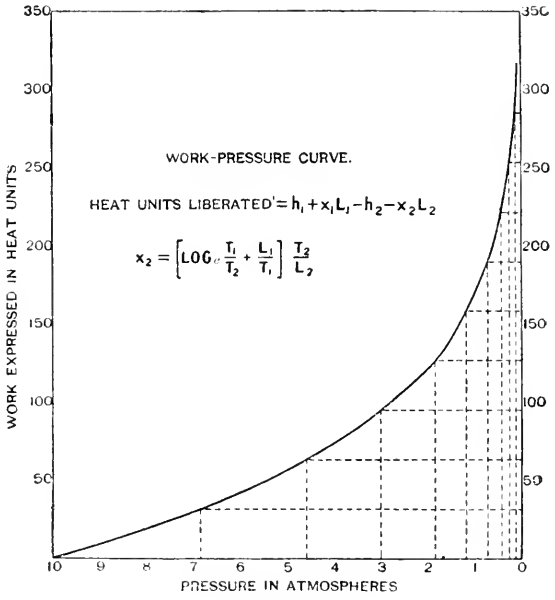

FIG. 436.

In the De Laval turbine, in consequence of the whole of the liberated heat energy of the steam being converted into velocity in the nozzle, the steam enters the wheel at from 3000 ft. to 4000 ft. per second, depending on the exhaust pressure. Since the theoretical speed of the wheel should be one-half that of the steam, we should have a peripheral wheel speed of 1500 to 2000 ft. per second. But this speed, which is equal to about one-third of a mile per second, is far in excess of what is practically safe, both because of the stress in the material due to centrifugal force, which increases as the square of the velocity, as well as from the difficulty of balancing the rotating mass; and in practice the peripheral speeds adopted are much lower, though at the expense, of course, of thermal efficiency.

In Fig. 437 is shown diagrammatically the means adopted in a multiple wheel turbine for obtaining a high thermal efficiency while keeping down peripheral speeds.

The upper continuous curve, as stated above, gives the velocity

obtained in a single nozzle for a fall of pressure through the whole range, which, if used in a single wheel, requires for maximum thermal efficiency a peripheral speed of wheel given by line AB.

The serrated horizontal line drawn about CD shows how the energy of the steam may be utilized while keeping down peripheral speeds.

Considering each single set of fixed and moving blades as a separate and independent turbine, the velocity of the steam depends on the

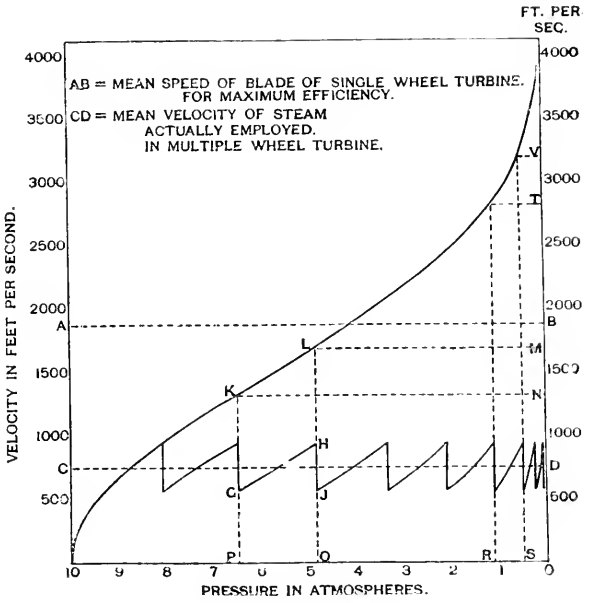

FIG. 437.

difference of pressure on the two sides of the rings of blades, and this pressure difference can be made very small, depending as it does upon the number of rings of blades employed.

In Fig. 437, the case is taken of steam moving with a mean peripheral velocity of 750 ft. per second.

The increase of velocity (as at GH = QH − PG) in passing from ring to ring of blades is due to fall of pressure (OP − OQ) on the two sides of the blades.

The fall of velocity (as at HJ = QH − QJ) represents the difference between the absolute velocity of the steam on entering and on leaving the blades of the rotatory wheel.

Each of the slanting lines, such as GH, drawn about the mean-velocity line CD is parallel to the corresponding portion of the upper velocity curve for the same range of pressures; thus GH is parallel to KL, each of these lines representing the rate of increase of velocity due to a fall of pressure from OP to OQ. The vertical lines through

P, Q, R, and S are drawn by dividing the velocity scale into a number of equal distances, as NM and TV, projecting to the curve and dropping perpendiculars.

It will be seen from the diagram that a given increment of velocity (and therefore of energy) requires a fall through a larger range of pressure at the high-pressure end of the scale than at the low-pressure end; thus NM and TV are equal ranges of velocity, but PQ is greater than RS.

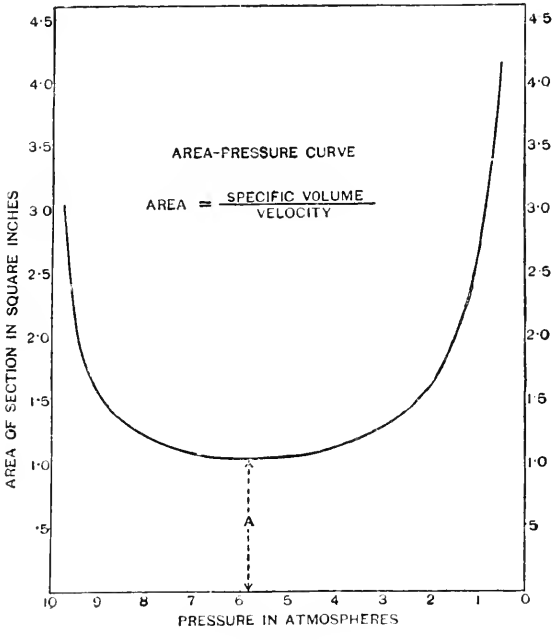

FIG. 438.

Area of the Steam Passages.—In the case of an ordinary steam nozzle, as also in the case of the steam turbine itself, the same weight of steam is passing per second through the successive sectional areas of the current, though the pressure, the velocity, the specific volume, and the sectional area respectively will each vary from point to point of its path through the turbine from the stop-valve to the exhaust.

The sectional area of the passages at the various points of its course per pound of steam employed is given by the equation—

$$A_n V_n = v_n$$

for any given pressure p_n, where A = the sectional area of the steam passage in square feet per pound of steam employed; V = the velocity

of the steam in feet per second; and v = the specific volume or volume per pound in cubic feet at the given pressure p, or—

$$\text{area} = \frac{\text{specific volume}}{\text{velocity}}$$

Fig. 438 is a curve showing how the sectional area of the current varies for steam starting at a pressure, $p_1 = 150$ lbs. abs., and expanding without resistance to pressure p_2 (the pressure in the condenser).

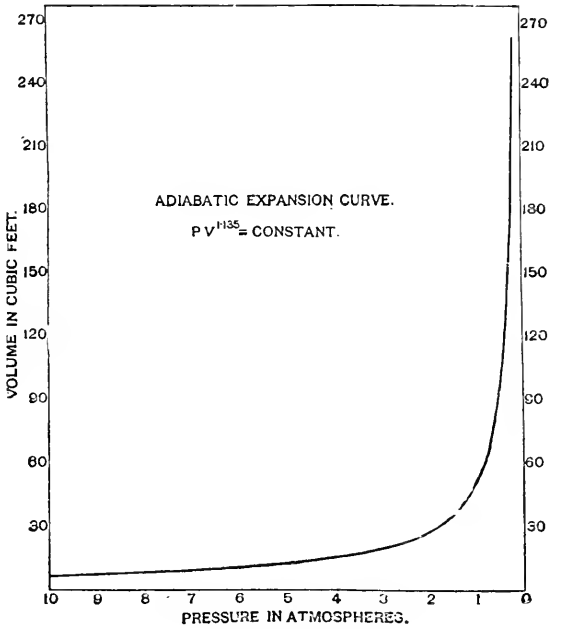

FIG. 439.

The horizontal base is a scale of pressures, and the vertical scale is a scale of areas in square feet. At each successive point on the pressure line ordinates A are set up, by calculation from the formula—

$$A = v \div V$$

where v is measured for the successive pressures from Fig. 439, and V from the upper curve of Fig. 437.

From Fig. 438, and using the same range of pressure, we may obtain a longitudinal section or profile of a suitable nozzle to deal with the weight of steam required; thus (area per pound of steam) $\times$ (weight of steam) = area required; and diameter at any section of nozzle = $\sqrt{\text{area} \div 0{\cdot}78}$.

Fig. 440 shows the longitudinal section of nozzle constructed by making the ordinates = D calculated as above, and by setting off the abscissæ to a scale of pressures, the scale chosen being preferably some function of the pressure, such as log p. The nozzle must not be made too short, otherwise eddying and confusion of currents is set up, which reduces the efficiency.

It will be seen that the nozzle at first rapidly converges till it reaches a narrowest section or throat (B).

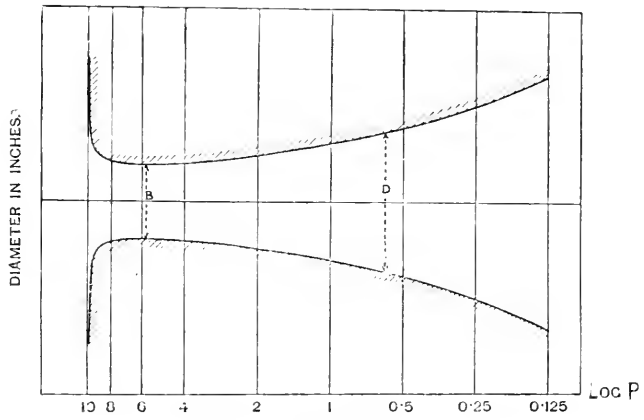

FIG. 440.

In the case of steam (unlike that of a liquid, where the volume is constant), the sectional area of a suitable nozzle must provide, not only for the increasing velocity due to fall of pressure, but for the increasing specific volume due to the same cause. It will, of course, be noticed that these two variables are opposite in tendency in their influence upon the sectional area of the passage, the increased velocity requiring reduced sectional area, and the increased specific volume requiring increased sectional area.

The nozzle is convergent at first, because as the pressure falls the velocity increases faster than the specific volume, and thus the value of $A = v/V$ decreases. This continues till the pressure reaches a limiting value, where A is a minimum. Beyond this point the nozzle is divergent, because the rate of increase of v is greater than the rate of increase of V; hence the value of $A = v/V$ increases, the rate increasing slowly at first, but afterwards rapidly at the lower pressures.

Maximum Rate of Flow through an Orifice.—Considering the case of the flow of steam through a simple orifice, then, for a given constant value of p_1 of the initial steam, as the back pressure p_2 is reduced the velocity of flow through the orifice increases, and this continues to be the law so long as p_2 does not fall below a certain critical pressure.

This pressure is reached when $p_2 = p_1 \times 0{\cdot}58$. Thus, if the initial pressure $p_1 = 150$ lbs. abs., and steam flows from a vessel at this pressure through an orifice against an exhaust pressure p_2, the rate of flow will increase as the back pressure p_2 is reduced, till the pressure p_2 at the orifice $= 150 \times 0{\cdot}58 = 87$ lbs. At this pressure we have now reached the maximum rate of flow. Any further reduction of back pressure p_2 will have no effect in increasing the rate of flow through the orifice.

This law is embodied in Napier's formula, namely—

$$W = \frac{ap_1}{70}$$

where W = maximum flow of steam in pounds per second through an orifice of area a sq. ins., provided that the back pressure p_2 is not higher than $0{\cdot}58\ p_1$.

This determines the *maximum weight* of steam which can flow through a given orifice for a given value of p_1.

The kinetic energy of the steam at the orifice is that due to the heat liberated by the fall of pressure from p_1 to $p_1 \times 0{\cdot}58$ only. By further expanding the steam beyond the orifice, in a suitably shaped nozzle, to the pressure p_2 in the condenser, the remaining available kinetic energy of the steam may be utilized.

For a simple convergent nozzle the equation on p. 389 can be used to determine the maximum rate of flow through an orifice, and to deduce Napier's formula:

$$\frac{V^2}{2g} = \frac{n}{n-1}\left\{p_1v_1\left(1 - \frac{p_2}{p_1}\right)^{\frac{n-1}{n}}\right\}$$

$$V = \sqrt{2g\frac{n}{n-1}\left\{p_1v_1\left(1 - \frac{p_2}{p_1}\right)^{\frac{n-1}{n}}\right\}} \quad . \quad . \quad . \quad . \quad (1)$$

Let A = area of orifice; then the volume of steam passing per second = AV.

Let v_2 = volume of one pound of steam at the final pressure p_2; then the weight of steam W passing the orifice per second is—

$$W = \frac{AV}{v_2}$$

But

$$p_1v_1^n = p_2v_2^n$$

$$\therefore v_2 = v_1\left(\frac{p_1}{p_2}\right)^{\frac{1}{n}}$$

$$\therefore W = \frac{AV}{v_1}\left(\frac{p_2}{p_1}\right)^{\frac{1}{n}} \quad . \quad . \quad . \quad . \quad . \quad . \quad . \quad (2)$$

Substituting the value of V from equation (1)

$$W = \frac{A}{v_1}\left(\frac{p_2}{p_1}\right)^{\frac{1}{n}}\sqrt{2g\frac{n}{n-1}p_1v_1\left\{1 - \left(\frac{p_2}{p_1}\right)^{\frac{n-1}{n}}\right\}}$$

$$W = A\sqrt{2g\frac{p_1}{v_1}\frac{n}{n-1}\left\{\left(\frac{p_2}{p_1}\right)^{\frac{2}{n}} - \left(\frac{p_2}{p_1}\right)^{\frac{n+1}{n}}\right\}}$$

To find the ratio of p_2 to p_1 so as to give a maximum W, let $\frac{p_2}{p_1} = r$.

Then, for different values of r, W is a maximum when $\left(\frac{p_2}{p_1}\right)^{\frac{2}{n}} - \left(\frac{p_2}{p_1}\right)^{\frac{n+1}{n}}$ is a maximum, because all the rest are constants.

To find when $(r)^{\frac{2}{n}} - (r)^{\frac{n+1}{n}}$ is a maximum differentiate and equate to zero.

Then $$\frac{2}{n}(r)^{\frac{2}{n}-1} - \frac{n+1}{n}(r)^{\frac{1}{n}} = 0$$

Dividing by $(r)^{\frac{1}{n}}$, $$\frac{2}{n}(r)^{\frac{1-n}{n}} = \left(\frac{n+1}{n}\right)$$

and $$r = \left(\frac{n+1}{2}\right)^{\frac{n}{1-n}} \quad \text{or} \quad r = \left(\frac{2}{n+1}\right)^{\frac{n}{n-1}}$$

For dry saturated steam n may be taken = 1·135,

$$\therefore r = \left(\frac{2}{2{\cdot}135}\right)^{\frac{1{\cdot}135}{0{\cdot}135}} = 0{\cdot}575 \quad \text{or} \quad \frac{p_2}{p_1} = 0{\cdot}575$$

From this result it is seen that the maximum flow of steam takes place when p_2 is $0{\cdot}575p_1$. Reducing the final pressure p_2 of the steam below this pressure does not increase the flow.

If the value of p_2 which makes the discharge a maximum be substituted in equation (1), a formula is obtained giving the velocity of the steam at the throat of the nozzle—

$$V = \sqrt{2g\frac{n}{n-1}p_1v_1\left\{1 - \left(\frac{2}{n+1}\right)^{\frac{n}{n-1}\times\frac{n-1}{n}}\right\}}$$

$$V = \sqrt{2g\frac{n}{n-1}p_1v_1\left\{\frac{n+1-2}{n+1}\right\}}$$

$$= \sqrt{2g\frac{n}{n+1}p_1v_1}$$

If dry steam is expanded adiabatically the index n is 1·135 and is very little less when the steam is not dry. Put $n = 1{\cdot}135$ and let P_1 = pressure in lbs. per sq. in. $= \frac{p_1}{144}$.

Then $$V = \sqrt{\frac{2 \times 32{\cdot}2 \times 1{\cdot}135}{2{\cdot}135} \times 144\ P_1v_1}$$

$$= 70{\cdot}2\sqrt{P_1v_1}$$

Since P_1v_1 is nearly constant for the pressures usually employed, the velocity at the throat of the nozzle will be nearly constant for all initial pressures. Its average value is about 1475 ft. per second. If the initial pressure is constant, the pressure and volume at the throat

will be constant as well as the velocity, and hence the area at the throat determines the amount of steam discharged.

The use of a divergent nozzle is necessary when the final pressure of the steam is less than $0{\cdot}575p_1$ if the kinetic energy of the jet is to be utilized. If there is no divergent portion beyond the throat, the steam spreads out on entering the low-pressure medium, and the energy developed by the expansion is wasted in producing vibrations of the medium and in eddies.

The divergent portion of the nozzle directs the steam in a definite direction, and by allowing for its expansion the velocity is greater at the end of the nozzle than at the throat.

The maximum discharge of steam from a nozzle may be determined as follows :—

Substitute in equation (2) the value of V for maximum discharge,

$$W = \frac{A70\sqrt{P_1 v_1}}{v_1}\left(\frac{p_2}{p_1}\right)^{\frac{1}{n}}$$

taking $n = 1{\cdot}135$ and $\frac{p_2}{p_1} = 0\ 58$

$$W = 43{\cdot}2\ A\sqrt{\frac{P_1}{v_1}}$$

This can be reduced to Napier's formula by assuming $P_1 v_1 =$ a constant $= 441$ and substituting $A = \frac{a_1}{144}$;

$$W = \frac{43{\cdot}2 \times a}{144}\sqrt{\frac{P_1^2}{441}}$$

$$W = \frac{a_1 P_1}{70}$$

Nozzle Design.—The important points in the design of nozzles are the area at the throat or smallest part, and the area at the end of the nozzle if divergent.

The initial pressure and weight of steam required to pass the nozzle may be taken as being known. If the final pressure is $0{\cdot}575p_1$ or less, then Napier's formula may be used.

$$W = \frac{ap_1}{70}$$

where W is the weight of dry steam discharged in pounds per second; p_1 is the initial pressure in pounds per square inch, and a is the area of the throat in square inches. For steam of a dryness x the following formula is very nearly correct :—

$$W = \frac{ap_1}{70\sqrt{x}} \quad \text{or} \quad a = \frac{70W\sqrt{x}}{p_1}$$

Example.—Find the area required for a nozzle to discharge 800 lbs. of steam per hour having a dryness of 0·96; initial pressure being 100 lbs. absolute, and final pressure 14·7 lbs.

The final pressure being less than $0{\cdot}575 \times 100$, Napier's formula may be used—

$$A = \frac{70\sqrt{0{\cdot}96} \times 800}{100 \times 60 \times 60} = 0{\cdot}152 \text{ sq. in.}$$

The area of the throat having been obtained, the area at only one point in the diverging part is necessary as this part of the nozzle is made straight.

Let a = area of the throat ;
u = specific volume of steam per pound at the throat ;
v = velocity of steam at the throat ;
x = dryness of steam at the throat.

Let a_1, u_1, v_1, x_1 be the corresponding quantities at a point in the diverging part. The weight of steam passing the throat is—

$$\frac{av}{ux}$$

The weight of steam passing the point selected is—

$$\frac{a_1v_1}{u_1x_1}$$

$$\therefore \frac{av}{ux} = \frac{a_1v_1}{u_1x_1} \quad \text{or} \quad \frac{a_1}{a} = \frac{vu_1x_1}{v_1ux}$$

The distance of the point from the throat may be varied by varying the angle of the diverging cone.

The usual cone angles employed in the nozzles of De Laval turbines vary from 10° to 20°.

Example.—Find the size of a suitable nozzle to expand 800 lbs. of steam per hour having a dryness of 0·96 from 100 lbs. absolute to 15 lbs. absolute. Neglect losses.

The area for 800 lbs. at the throat by Napier's formula = 0·152 sq. in. Let u_1, v_1 and x_1 be the volume, velocity and dryness respectively of the steam at the end of the nozzle. Then x_1 may be found from the entropy chart, u_1 may be calculated from the tables, and v_1 calculated as explained on p. 391.

$$x_1 = 0{\cdot}863 \; ; \; u_1 = 26{\cdot}27 \text{ ft.}$$

From the entropy chart the heat drop = 135 B.Th.U.

$$v_1 = 224\sqrt{135} = 2600.$$

The pressure at the throat = $100 \times 0{\cdot}575 = 57{\cdot}5$ lbs. and from the entropy chart the dryness x, after expanding from 100 lbs. to 57·5 lbs. = 0·927 ; heat drop = 42 B.Th.U.

$$u = 7{\cdot}46 \qquad v = 224\sqrt{41{\cdot}9} = 1450 \text{ ft. per second,}$$

$$\therefore a_1 = \frac{0{\cdot}152 \times 1450 \times 26{\cdot}27 \times 0{\cdot}863}{2600 \times 7{\cdot}46 \times 0{\cdot}927}$$

$$= 0{\cdot}278 \text{ sq. in.}$$

$$\text{diameter at throat} = d = \sqrt{\frac{0{\cdot}152}{0{\cdot}7854}} = 0{\cdot}44$$

$$\text{diameter at end of nozzle} = d_1 = \sqrt{\frac{0{\cdot}278}{0{\cdot}7854}} = 0{\cdot}59$$

Assuming a cone angle of 12°

$$\frac{d_1 - d}{2l} = \tan 6°$$

where l = length of cone, $l = \dfrac{0{\cdot}15}{2 \times 0{\cdot}105} = 0{\cdot}71$ in.

Diagram of Velocities for a Single-wheel Turbine.—Let DB (Fig. 441) represent the curved form of the blades projecting from the rim of the turbine wheel, and receiving and exhausting the steam at given angles with the plane of the wheel. Let CA be the direction and absolute velocity V_a of the entering steam, making an angle α with the plane of the wheel, and V_T the peripheral velocity of the wheel.

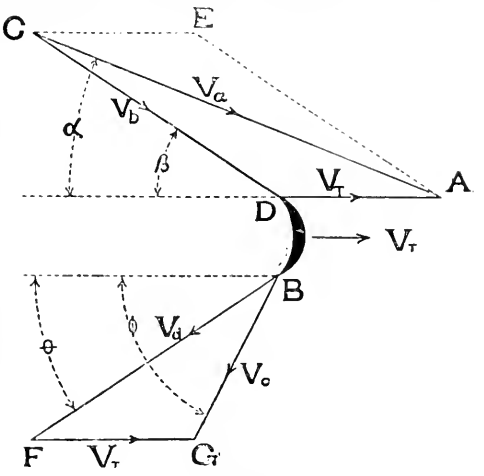

FIG. 441.

From A draw AD parallel to the plane of rotation of the wheel, and equal to the velocity of the wheel-blade V_T, then CD, making an angle β with the plane of the wheel, represents the direction and velocity V_b to scale of the entering steam relatively to the rotating wheel-blade.

NOTE.—CA may be considered as the path of a shot from a rifle, and DA the path of a moving target, then the shot fired from C with velocity and direction CA, at a target with velocity and direction DA, will have a precisely similar effect to that of a shot fired from C with velocity and direction CD when the target is still. Thus the direction and absolute velocity of the shot = CA, but the direction and velocity relatively to the moving target = CD.

Let BF represent the velocity and direction of the steam leaving the blade, and making in this instance an angle of exit θ with the plane of the wheel equal to the angle of entrance β. If the passage between the blades is parallel, and there is no fall of pressure, then BF = V_b. From F draw FG = V_T parallel to the plane of the wheel; then BG = V_c = the absolute velocity of the steam leaving the wheel, and the direction which it makes with the plane of the wheel = ϕ.

In order that the steam shall flow smoothly on to the vanes of the turbine and not strike them abruptly and thereby cause loss by shock, the design must be so arranged that the tangent to the entering surfaces of the vanes shall be parallel to the line of flow of the steam.

Thus CD is tangent to the entering edge D of the vane DB.

Efficiency.—The kinetic energy given up by the steam is represented by $\frac{W(V_a^2 - V_c^2)}{2g}$, and the efficiency of the turbine as a machine is proportional to $\frac{V_a^2 - V_c^2}{V_a^2}$.

To obtain a maximum efficiency, it is obvious that the steam should leave the turbine at the lowest possible velocity—in other words, that V_c shall be a minimum.

The efficiency may be determined by considering the change of momentum parallel to the wheel. The absolute velocity parallel to the plane of the wheel on entering is $V_a \cos \alpha$; the absolute velocity parallel to the wheel on leaving is $V_c \cos \phi = V_d \cos \theta - V_T$.

Turning effort = change of momentum per lb. of steam

$$= \frac{1}{g}(V_a \cos \alpha - V_T + V_d \cos \theta)$$

$$\text{work done per second} = \frac{V_T}{g}(V_a \cos \alpha - V_T + V_d \cos \theta)$$

$$\text{efficiency} = \frac{\text{work done}}{\text{original kinetic energy}}$$

$$= \frac{V_T(V_a \cos \alpha - V_T + V_d \cos \theta)}{g \frac{V_a^2}{2g}}$$

$$= \frac{2V_T(V_a \cos \alpha - V_T + V_d \cos \theta)}{V_a^2}.$$

Assuming there is no friction in the vanes $V_d = V_b$ and taking inlet angle θ = outlet angle β, the expression for the efficiency reduces to

$$\frac{4V_T(V_a \cos \alpha - V_T)}{V_a^2} \quad \ldots\ldots\ldots \quad (1)$$

because $V_d \cos \theta = V_a \cos \alpha - V_T$.

Fig. 442 shows how the efficiency varies with the blade speed V_T, assuming $\alpha = 20°$ and velocity of steam $Va = 3200$ ft. per sec.

The efficiency will be a maximum when

$$\frac{4V_T(V_a \cos \alpha - V_T)}{V_a^2}$$

is a maximum.

To find the maximum efficiency consider V_a and cos a to be constant, then differentiate and equate to zero.

$$\therefore \ V_a \cos a - 2V_T = 0$$

or
$$V_T = \frac{V_a \cos a}{2}.$$

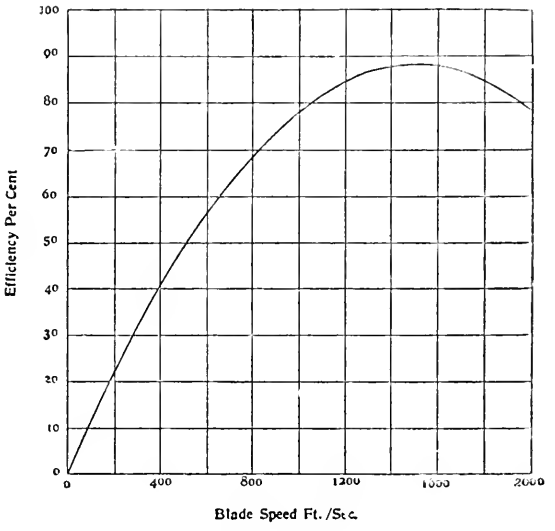

FIG. 442.

If $a = 0°$ then $V_T = \frac{1}{2}V_a$ (see p. 389).
If $a = 20°$; then cos $20° = 0{\cdot}94$.

$$\therefore \ V_T = 0{\cdot}47V_a.$$

Substituting the value of V_T, which gives the maximum efficiency in equation (1), the

$$\text{maximum efficiency} = \frac{2V_a \cos a \left(V_a \cos a - \frac{V_a \cos a}{2} \right)}{V_a^2}$$

$$= \frac{2V_a^2 \cos^2 a \left(1 - \frac{1}{2}\right)}{V_a^2}$$

$$\therefore \text{ maximum efficiency} = \cos^2 a.$$

If $a = 20°$, maximum efficiency = $\cos^2 20° = (0{\cdot}94)^2 = 0{\cdot}88$, or 88 per cent.

In Fig. 443, K and L represent two rows of fixed guide blades, and M a row of moving blades between them. Line V_a represents the absolute velocity of the steam leaving the guide-blades K and impinging on the blades M of the rotating wheel. Line V_r, making an angle β with the plane of the wheel, is tangent to the entering edge of the moving blade, and is parallel to the direction (relatively to the wheel) of the steam current entering the blades.

The steam now flows between the blades of the moving wheel, following the concave surface of the blade, and passes out on its way to the next row of guide-blades at an angle of exit θ.

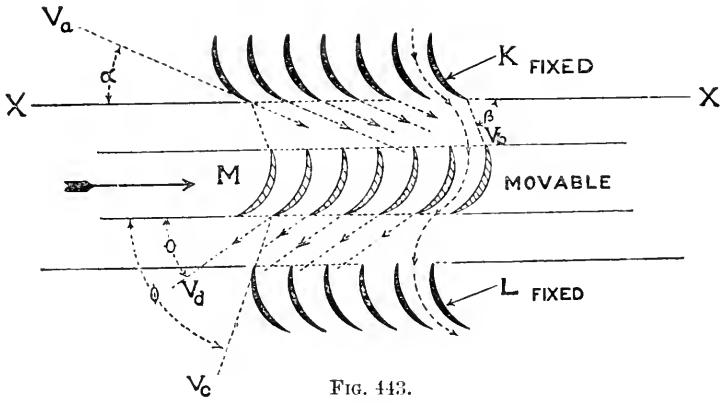

FIG. 443.

When, however, the velocity of the wheel is considered, the direction of the steam entering the next row of guide-blades is that given by V_c making an angle ϕ with the plane of the wheel. This line should be parallel to the tangent to the entering surface of the fixed guide-blades.

Fig. 444 shows how steam at a high velocity, CA, and with a turbine speed AD or EF, may be employed to act upon a series of

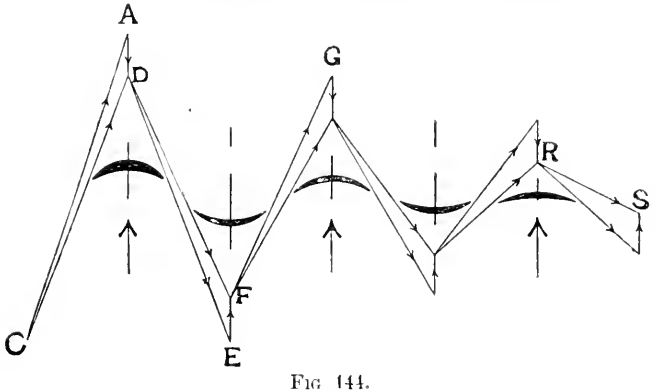

FIG. 444.

successive turbine wheels and guide-blades so as to absorb the kinetic energy of the steam by stages, in other words, to compound the velocity and deliver the steam finally at a much reduced velocity, RS. CD = DE, DF = FG, and so on. It will be noticed that the entrance and exit angles of the blade surface are approximately tangent to the entrance and exit angles of the steam.

Impulse Turbines.

The impulse type of turbine may be subdivided into four classes: (*a*) simple pressure, (*b*) pressure compounded, (*c*) velocity compounded, (*d*) combination of pressure and velocity compounded.

The *simple pressure type* is illustrated by the De Laval turbine. In this turbine the whole of the velocity due to the total pressure fall of the steam is taken on a single wheel.

The *pressure compounded type* is illustrated by the Rateau type (see the drum portion of Fig. 452). In this type the total pressure fall of the steam is not taken on a single wheel, but proceeds by small stages of pressure; thus there is a small fall of pressure in the first series of nozzles, and the velocity generated thereby is absorbed by the wheel immediately following. A further step in pressure fall is taken in the next series of nozzles, which again acts on a succeeding wheel, and so on until the total range of pressure fall is utilized. The comparatively small fall of pressure at each stage secures a relatively small velocity of the steam, and a correspondingly low peripheral velocity of the turbine.

The *velocity compounded type* consists of a single complete fall (Fig. 444) of pressure in the nozzle with its accompanying velocity energy generated, acting successively upon two or more wheels, the energy of the steam being absorbed step by step by these succeeding rows of blades, without, however, any further fall of pressure. Guide blades are, of course, placed between each succeeding row of moving blades to suitably direct the steam from one wheel to the next. If, say, four rows of moving blades are used, the velocity of the wheel may be reduced to about one-fourth the velocity of the single row type.

The combination of *pressure and velocity compounded* is illustrated by the Curtis type of turbine. The pressure fall is divided into several stages, and each stage is velocity compounded, that is, takes up the velocity by passing successively through two or more rows of blades without fall of pressure.

The De Laval Steam Turbine.

This turbine was introduced in its present form by Dr. De Laval about 1889, and it is used generally for small powers varying from 5 H.P. to 400 H.P. It consists of a single turbine wheel mounted on a flexible spindle, the bearings on each side of the wheel being some distance apart. The wheel is driven by steam projected on to its blades at a velocity of from 3000 to 4000 ft. per second through nozzles, the exhaust from the vanes flowing at a much reduced velocity into the air or into a condenser, the kinetic energy of the steam being converted into kinetic energy of the wheel.

The revolutions of the turbine wheel vary from 30,000 revs. per minute for a small 5-H.P. turbine, with a wheel diameter to centre of blades of 4 ins., and a peripheral speed of 515 ft. per second, to 10,600 revs. per minute for a 300-H.P. turbine, with a wheel diameter of 30 ins. and a peripheral speed of 1378 ft. per second.

Owing to the extremely high speed of this turbine spindle, a pinion is mounted on its outer end, gearing into a very carefully made, machine-cut, double helical wheel giving a reducing speed ratio of 10 to 1. The driving-pulley which is fixed on the wheel axis thus runs at one-tenth the speed of the turbine spindle (see Fig. 446).

It is found to be impossible to perfectly balance a wheel rotating at so high a speed, but the difficulty of excessive vibration was overcome by constructing a flexible turbine spindle with a self-aligning bearing, by means of which the wheel is enabled to rotate about its own centre of mass.

There are vibrations with such an arrangement which increase with

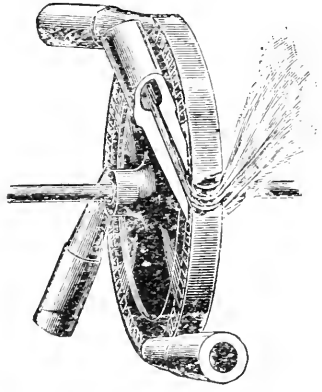

FIG. 445A.—DE LAVAL WHEEL AND NOZZLES.

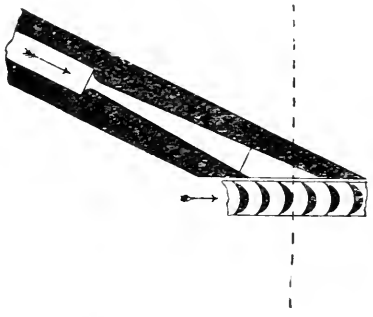

FIG. 445B.—SECTION OF DE LAVAL NOZZLE.

the number of revolutions of the wheel. At a certain speed called the "critical speed" the vibrations reach a maximum beyond which the shaft takes up a new centre of rotation and the vibrations disappear, a phenomenon known as the "settling" of the wheel. In the De Laval turbine the critical speed is one-sixth to one-eighth the standard number of revolutions of the wheel.[1]

On account of the very high speed of the shaft its diameter is very small, and it is therefore easy to make it flexible. The shaft of a 150 H.P. De Laval turbine is only 1 in. in diameter. A feature of this turbine is that the steam is expanded to the full in the nozzle before entering the turbine.

The shape of the nozzle employed is divergent (see Figs. 445A and 445B) and consists of three parts, namely: (1) The throat at the admission end of the nozzle, which is or may be looked upon as the extremity of a convergent nozzle preceding it, and where the pressure of the steam approaches its critical value; (2) a divergent part, in which the steam expands to its terminal pressure: (3) a parallel part, in which the steam-particles are directed in parallel lines upon the vanes: this part is preferably made rectangular and of suitable dimensions to

[1] See lecture by Mr. Andersson, issued by Messrs. Greenwood & Batley, Leeds.

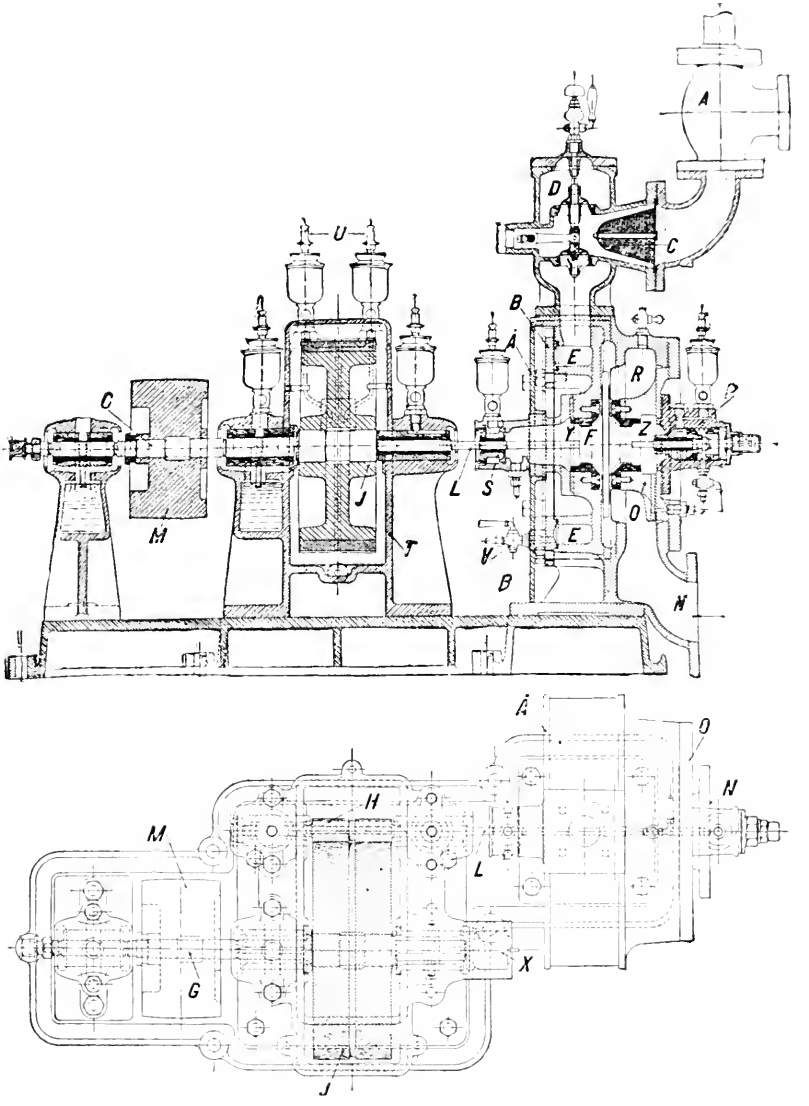

A, Steam stop valve; B, steam chest cover; C, steam sieve; D, governor valve or throttle valve; E, steam chest; F, turbine wheel; G, shaft for belt pulley; H, pinion; J, gearing wheel; L, flexible shaft; M, belt pulley; N, exhaust outlet; O, cover for exhaust chamber; P, ball bearings; R, exhaust chamber; S, tightening bearings; T, gear case; U, sight feed lubricators; V, drain cock for steam chest; X, centrifugal governor; Y, safety bearing; Z, ditto; A', isolating plate.

FIG. 446.—SECTION OF DE LAVAL STEAM TURBINE.

efficiently direct the steam on to the vanes. The quantity of steam

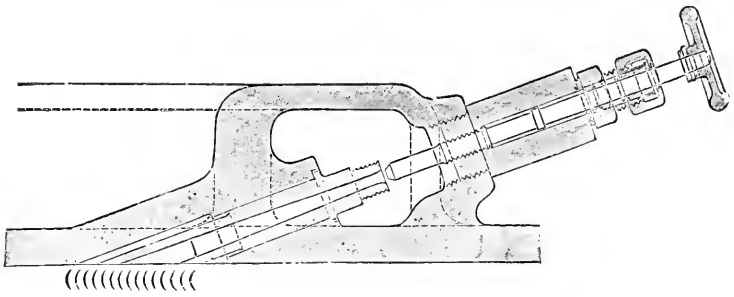

Fig. 447.—De Laval Nozzle and Shutting-off Valve.

that will be delivered in the unit of time depends upon the area of the smallest transverse section of the nozzle.

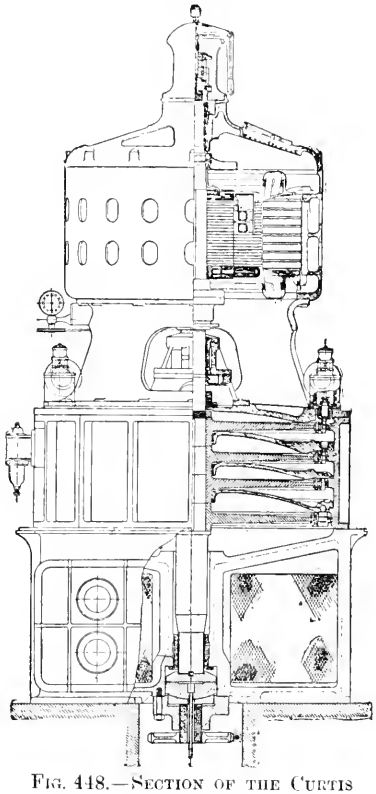

Fig. 448.—Section of the Curtis Turbine.

Steam is admitted to the turbine by a number of nozzles set at an angle of 20° with the plane of the wheel (see Figs. 445 and 447), and the steam-supply is regulated by completely shutting off one or more of the nozzles, leaving the others wide open instead of throttling all the nozzles. The larger the machine the larger the number of steam nozzles supplied.

The steam pressure in the turbine wheel-case is at all times practically the pressure of the exhaust. The efficiency of the turbine increases as the steam pressure in the turbine-case decreases due to the reduced loss by fluid friction between the rotating wheel and the surrounding steam at the lower pressure, which is an additional reason for working the turbine condensing.

The Curtis Turbine.

This turbine is of the "impulse" type, receiving steam of high velocity from the nozzle, as in the case of the De Laval turbine, but utilizing it in such a way as to reduce the peripheral velocity of the wheel by passing the steam through a number of wheels in

succession, while obtaining a high thermal efficiency by delivering the steam to exhaust at a low terminal velocity.

This design of turbine differs from other designs in having a vertical spindle with turbine wheels rotating in horizontal planes (Fig. 448). In this figure the upper portion is the electric generator, the middle portion is the steam turbine, and the lower portion is the condenser. The turbine wheels may be two, three, four, or more in number, each wheel being separated from its neighbour by a fixed diaphragm with accompanying nozzles in each diaphragm, and with rings of stationary blades attached to the outer cylinder to alternate suitably with the blades of the respective wheels.

The process then consists first of expansion of the steam through nozzles, and then the subsequent abstraction of a portion of the velocity of the steam by impulse upon the first turbine wheel. This constitutes the first "stage." To further utilize the energy of the steam, this process is repeated through two, three, or more "stages" or expansions; thus in Fig. 449, which shows the nozzles and blades for a two-stage turbine, it will be seen that the steam flowing from the first-stage wheel AA passes through the nozzles in the diaphragm below it, expands as before, and gives up more of its energy to the second-stage wheel BB below it, and so on until the available energy of the steam is utilized.

Each wheel of the Curtis turbine is fitted with two, and sometimes

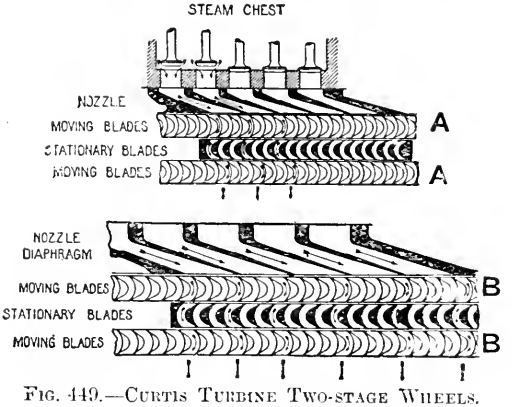

FIG. 449.—CURTIS TURBINE TWO-STAGE WHEELS.

three, rows of buckets. In Fig. 449 two rows of buckets are shown on each wheel rim at AA and BB.

The number of stages or sets of moving and stationary blades employed depends upon the degree of expansion, and upon the peripheral velocity required. The greater the range of pressure to be worked through and the lower the peripheral speed the larger the number of stages necessary.

The governing is effected by closing successive nozzles of the first-stage wheel, and thus decreasing the number of nozzles in action. Fig. 449 shows three nozzles closed and two open.

The speed of rotation of a 2000-K.W. Curtis turbine is 1000 revolutions per minute.

The footstep bearing, which carries the whole of the weight of the rotating parts, consists of two circular bearing blocks, one of which rotates with the shaft, and the other is fixed to the base. Water is used as a lubricant, and is forced through a hole in the stationary bearing between the two surfaces from the centre outwards in a thin film. From the foot-step bearing the water passes upwards and lubricates a guide-bearing immediately above it, from whence it passes to the condenser. A force pump supplies water to this bearing at a pressure of about 400 lbs. per square inch.

Reaction Turbines.

A very early form of practical turbine (about 1730) was that known as Barker's Mill (see Fig. 449A). It is a machine which rotates by the

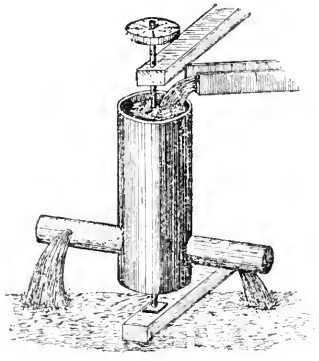

Fig. 449A.

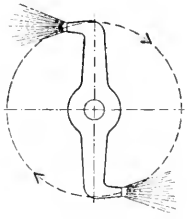

Fig. 449B.

reaction of two streams of water projected from nozzles in the arms tangentially to the circle of rotation of the arms.

Fig. 449B is a modification of the same arrangement.

The Parsons Steam Turbine.

This form of turbine was introduced by the Hon. Chas. A. Parsons in the year 1884, and it consists of a long cylindrical steel drum CDE (Fig. 450), the diameter of which increases by steps from the high-pressure end to the low-pressure end. The drum is mounted on a shaft which runs in two main bearings, and the whole is surrounded by a fixed cast-iron cylindrical case. The outer diameter of the drum is less than the inner diameter of the case, and in the annular space thus provided are the blades by means of which the steam drives the turbine.

The blades on the revolving drum are arranged in rings projecting

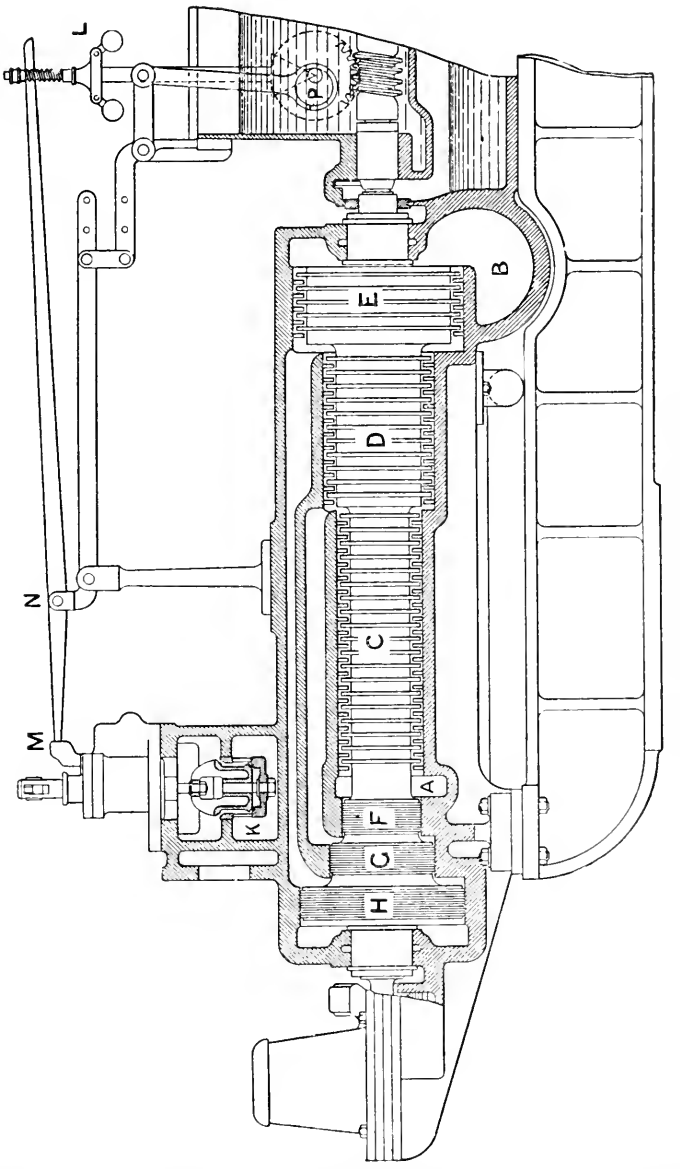

FIG. 450.—THE PARSONS STEAM TURBINE.

outwards, like bristles, from the surface of the drum, and in planes at right angles to the shaft. A space is provided between each row of

revolving blades for an alternating row of fixed blades projecting inward radially from the inner side of the cylindrical case, and forming rings of guide-blades, each ring of revolving blades being provided with its ring of fixed guide-blades. The steam enters the annular chamber A at the small end of the turbine by the double-beat valve K, and expands through the rings of alternating guide-blades and rotating blades, finally exhausting by the chamber B to the air or to a condenser.

The total fall of pressure from the first to the last ring of blades is divided up between the number of pairs of rings, each pair, namely, one ring of guide-blades and one ring of rotating blades, constituting practically a separate turbine working through a small range of steam pressure.

The steam passes first through a ring of fixed guide-blades, and is then projected in a rotational direction against the succeeding ring of moving blades. In flowing through the guide-blades the pressure falls, and the steam acquires a velocity proportional to the fall of pressure. By the impulse of the steam suitably guided to the rotating blades work is done upon the blades, and the rotation of the turbine is accelerated.

In passing through the moving blades the current of steam is diverted (owing to the shape of the blade) in a direction more or less directly opposite to the line of motion of the moving blade, and this produces a *reaction* effect upon the wheel in addition to the force due to the initial impulse of the steam. The steam, on leaving the moving blades, enters the next ring of fixed guide-blades, from which, owing to the shape of these blades, it is diverted in a rotational direction upon the next ring of moving blades, and so on. The increased area of passages required as the pressure falls and the volume of the steam increases is obtained by increasing the length of the blades. When the length of the blade has reached the desired limit the diameter of the turbine is increased, as at D and E (Fig. 450).

The reaction effect above referred to is more or less common to all types of turbines. The Parsons turbine, however, receives the name of a Reaction Turbine as a consequence of the fact that part of its kinetic energy is generated in the steam *during its passage through the wheel*, and the reaction effect of this accelerated velocity of the steam acts as it leaves the wheel in a direction opposite to that in which the wheel is moving.

Thus, referring to Fig. 450A, suppose the steam to be leaving the lower edge of the guide-blades, as at C, with velocity and direction V_a; then if V_r be the velocity and direction of the wheel-blades, V_b is the velocity and direction of the steam, relative to the wheel-blades, which is entering the wheel passages at A.

During the flow of steam through the space between the wheel-blades A to B, the steam expands owing to the difference of pressure on the two sides of the wheel, and increases in velocity from V_b, its velocity, relative to the blades, on entry at A, to some velocity V_c on leaving. The difference $V_c - V_b$ represents the increased velocity

acquired by the steam in its passage through the wheel, and the reaction effect due to this increased velocity accelerates the speed of rotation of the wheel.

On leaving the wheel at B, the steam passes to the next row of guide-blades; but its velocity V_c, which it had relatively to the wheel, will now become V_a in magnitude and direction on entering the stationary guide-blades, as seen by constructing the diagram of velocities.

A similar acceleration of velocity of the steam occurs while passing through the guide-blades as occurs while passing through the wheel-blades.

When the angles of the blades at the entering and leaving edges are the same for both guide-blades and wheel-blades, which is usually the

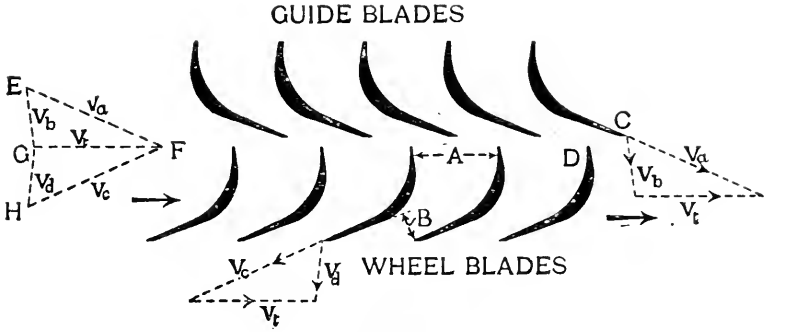

FIG. 450A.

case, the velocities of the steam on entering and leaving the guide-blades are equal to the corresponding relative velocities of the steam entering or leaving the wheel-blades.

The diagrams of velocities may be combined, as shown at the left-hand end of Fig. 450A. EFG is the triangle of velocities of the steam leaving the guide-blades and entering the wheel-blades, and FHG for the steam leaving the wheel-blades and entering the guide-blades.

REACTION AND IMPULSE TURBINES.

The following is a summary of the differences between the two types:—

The Impulse Turbine.—1. In this type the whole of the intended fall of pressure of the steam takes place in the nozzle itself before the steam reaches the wheel.

2. There is no difference of pressure in the two sides of the impulse wheel.

The Reaction Turbine.—1. Part of the transformation of pressure energy to kinetic energy takes place *within the wheel itself.*

2. There is a difference of pressure and velocity of the steam between the inlet and outlet ends of the blades, the pressure falling and the velocity increasing as the steam passes through the spaces between the blades. The reaction turbine is so named because of the reaction effect created by the accelerated velocity generated within the wheel itself, as distinguished from velocity generated externally to the wheel.

3. There is a loss due to leakage of the steam through the clearance spaces between the wheel (rotor) and the case (stator), due to the difference of pressure on the two sides of the wheel. This difference of pressure on the two sides of the wheel not existing in the case of the impulse wheel, the loss in the impulse type through clearance is negligible.

In the previous cases friction of the steam in the passages has been neglected. In Fig. 450B, if BF be the theoretical relative velocity of the steam leaving the wheel-blades, and BH the actual relative velocity, FH being the loss due to friction, then the steam passes to the next row of blades with a velocity and direction equal to BK instead of BG, HK being equal to FG, the velocity of the wheel-blades.

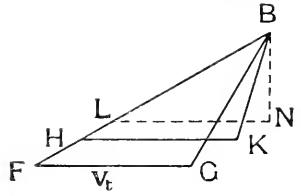

FIG. 450B.

It will be obvious that the velocity of the steam passing forward through any transverse section of the turbine must be such that BN (Fig. 450B) drawn parallel to the axis of the turbine is not less than the velocity necessary to pass, at that section, the weight of steam per second required to generate the estimated power of the turbine.

The cross-sectional area of the exit end of any given row of blades is equal to the width of opening B (Fig. 450A) multiplied by the number of such openings in the periphery of the wheel at that section, and by the width of the annular steam space at the section.

Thus if W = weight of steam per sec. to be passed through the turbine to generate the required power, V = cubic feet of steam per lb., S = velocity of the steam in feet per sec., and A = net cross-sectional area of passage in square feet ; then—

$$WV = AS$$

and

$$S = \frac{WV}{A}$$

In Fig. 450B BN must not be less than S as given in the above equation.

EXAMPLE.—A 1000 H.P. turbine using 18 lbs. of steam per hour per horse-power has a net annular steam space between the blades of 50 sq. ins. at a point where the steam passes the cross-section at a pressure of 60 lbs. per sq. in. Find the velocity of the steam in the direction of the axis of the turbine in order to pass the weight of steam required. (Specific volume of steam at 60 lbs. absolute pressure = 7 cubic ft. per lb.)

Then—

$$S = \frac{WV}{A} \text{ ft. per sec.}$$

$$= \frac{1000 \times 18 \times 7 \times 144}{60 \times 60 \times 50} \text{ ft. per sec.}$$

$$= 100{\cdot}8 \text{ ft. per sec.}$$

To maintain this velocity approximately constant throughout the whole range of guide- and wheel-blades, there must be an approximately constant ratio between the volume of the steam at any given cross-section at which the pressure is known and the cross-sectional area of the passage through which the steam at the given pressure is passing.

The blades vary in length according to the size of the turbine, from $\frac{3}{4}$ in. or less at the high-pressure end to 6 ins. or more in length at the low-pressure end, and are made from rolled sheet brass strips having a more or less crescent-shaped cross-section. The longer blades are stiffened by shrouding. The blades are fixed in dovetailed grooves in the drum, with distance pieces between them, the whole being caulked in position.

Clearance.—When in position the rings of blades on the case nearly touch the surface of the revolving drum, and the projecting blades from the drum nearly touch the internal surface of the case. These clearance spaces are left as small as possible, varying from 0·015 at the small end to 0·025 at the large end for small turbines, while for large turbines (say 5000 K.W.) the clearance varies from 0·035 at the small end to from 0·05 to 0·06 at the large end.

The proportion of steam loss due to radial clearance leakage increases at low peripheral speeds.

Fine radial clearances are essential to steam efficiency. They add, however, to the danger of friction between the blade and the surface of the drum or cylinder, and hence to the stripping of blades, especially in cases where the turbine spindle is not sufficiently stiff to prevent sagging, or is imperfectly balanced, causing a whipping action of the spindle; or where there is cylinder distortion due to unequal expansion.

At the left end of the spindle (Fig. 450) are grooved pistons or dummies, F, G, H, equal in number to the number of steps in the drum. The object of these pistons is to prevent end thrust, due to difference of steam pressure on the two sides of the rotating blades, by setting up equal and opposite axial pressures against the faces of the dummies. The steam acts upon these end pistons through passages cast in the body of the cylinder as shown.

To make these pistons steam-tight, and at the same time to avoid friction, rectangular grooves are turned on the pistons, and in the grooves rectangular rings are fitted, but without touching the surface of the cylinder, the joint being rendered steam-tight by the centrifugal action of the steam in the neighbourhood of the pistons. A similar

packing is fitted at the stuffing boxes where the shaft projects from the turbine cylinder.

A thrust bearing is provided at the end of the turbine shaft to prevent contact between the rotating and stationary parts of the turbine, and to provide means of adjusting the clearance between these parts.

Admission of steam to the turbine occurs in a series of gusts by the periodic opening and closing of the double-beat valve K (Fig. 451). This valve is controlled by means of a steam relay, which is kept working continuously by mechanical connection with the turbine shaft, giving it an up-and-down pulsating movement at the rate of about three strokes per second.

Fig. 451 shows in detail the action of the governing gear and relay valve as constructed by Messrs. Brown Boveri.[1] On opening the main

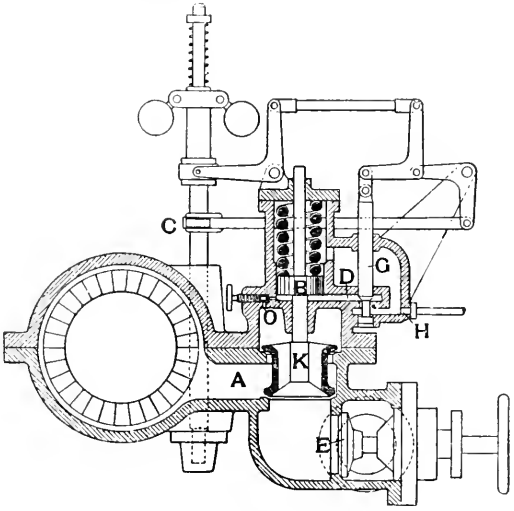

Fig 451.

stop valve E, steam enters the valve chamber, and is admitted to the turbine when the double-beat valve K opens, which it does intermittently by the following means. The spindle of the valve projects upwards through a spring chamber or cylinder, and the spindle carries a small piston which is enclosed in this cylinder, and which is held in its lowest position by the spring. In the bottom of the cylinder there is a small hole, O, regulated by a small adjusting valve through which the steam flows continuously into the cylinder below the piston B when the stop valve E is open. The steam under the piston lifts the double-beat valve K and admits steam to the turbine. This

[1] See a paper by Will Rung and A. E. Schoder, *Engineer* (American), January 1, 1903.

accounts for the upward movement of the valve, but the intermittent upward and downward movement is obtained by providing another and larger opening, D, which acts as an exhaust port. This port is alternately opened and closed by means of a small piston valve, G, which receives a regular periodic up-and-down movement from the eccentric cam C. When the exhaust port is closed, the piston B rises and the double-beat valve K lifts; when the exhaust port opens the steam escapes, and the piston falls by the action of the powerful spring, and the valve K closes.

The number of alternate openings and closings of the exhaust port, and therefore the number of gusts of steam supplied to the turbine, is determined by the rotations of the governor, from the spindle of which the movement of the small valve G is obtained.

The governor regulates the speed of the turbine as follows: When the speed increases above the normal, the action of the governor raises the small valve G above its mid position, giving an earlier and fuller opening to exhaust, and therefore a shorter period of time of opening and a more restricted lift for the double-beat valve.

Conversely, when the speed falls below the normal, the relay valve opens later, and the double beat has a wider opening. At full load the steam-gusts merge into an almost continuous flow.

The steam which escapes from the exhaust port of the relay valve is passed by means of pipes to the main bearing glands of the turbine, thereby acting as a steam packing and preventing leakage of air into the turbine. The constant movement of the parts tends to keep the governor gear free and sensitive.

Bearings.—The form of shaft-bearing employed consists of a gun-metal bush, which is prevented from turning by a loose-fitting dowel. The bush is surrounded by three concentric tubes, fitting easily within each other. The annular space between the tubes is filled with oil, which damps all vibrations, and the bearing is practically self-centering.

The Disc-Drum Turbine.

With a view to increasing the speeds of rotation for electric generators, and thereby reducing weight of plant and cost of construction per kilowatt, combinations of the previous types of turbines have been adopted, consisting of a single impulse wheel of the Curtis type for the high-pressure end combined with either a reaction turbine of the Parsons pattern, or a series of wheels of the Rateau type, for the low-pressure end.

Some advantages of this combination are: (1) loss by leakage past the short blades, owing to the ratio of blade length to clearance being large at that end, is avoided; (2) the pressure and temperature of the steam entering the turbine from the nozzle on a single-impulse wheel are less than in the case of the reaction turbine, and there is therefore less tendency to distortion of the turbine casing; this is particularly

important where superheated steam is employed; and (3) the length of the turbine shaft is reduced.

In the Westinghouse high-pressure impulse turbine, Fig. 452,[1] the steam is expanded in the nozzles C before entering the turbine and the velocity produced is absorbed in a two-stage velocity wheel M of the

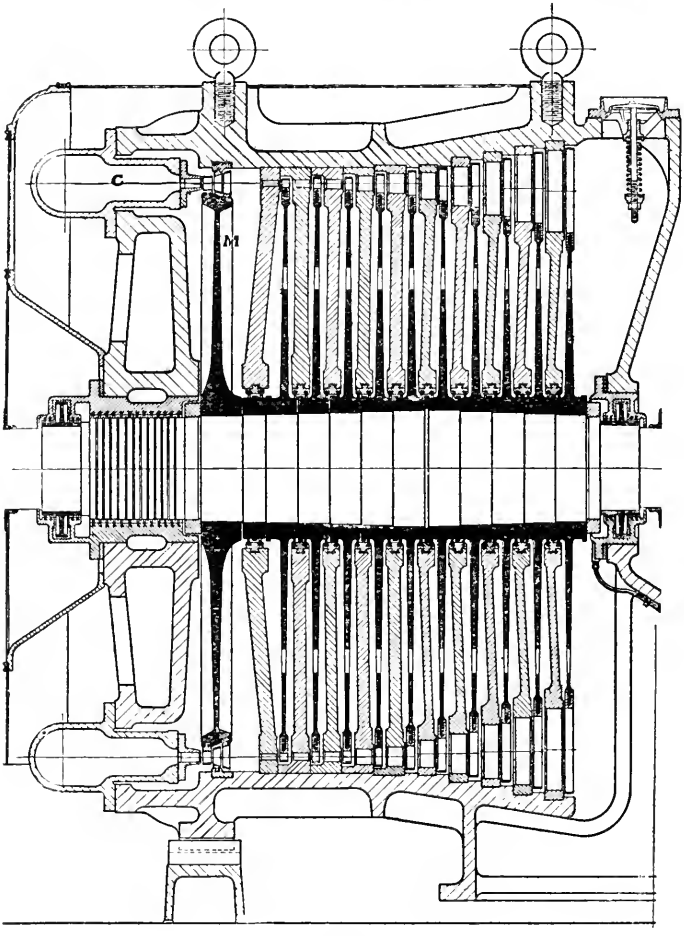

FIG. 452.

Curtis type. Three nozzles are fitted, one nozzle only is used up to half load; two nozzles from half to full load, or when working non-condensing; and three nozzles for overload.

The steam next passes through a series of nozzle-pierced diaphragms and wheels alternately (Rateau type). The taper webbed steel

[1] Kindly supplied by the British Westinghouse Co.

wheels shown dark in section are forced on the stepped shaft and fixed by keys.

The diaphragms dividing the wheel chambers are in halves to allow of easy inspection of the glands at the shaft.

The pressure on the two sides of the wheels is the same, so that there is no tendency for steam to leak past the wheels.

There is, however, a difference of pressure on the two sides of the diaphragms and a tendency for leakage to take place between the shaft and the surface of the hole in the diaphragm through which it passes. Leakage is reduced to a minimum by providing this opening in the diaphragm with special glands, which may touch the wheel and wear down slightly, thus giving a minimum clearance.

A labyrinth gland and water gland prevent leakage of steam past the shaft at the high-pressure end, and a water gland at the low-pressure end.

The pressure on the two sides of the wheel being the same, no balance pistons are required, as there should be no end thrust.

Labyrinth Glands.—The leakage of steam through turbine glands where ordinary steam-tight packing cannot be adopted is prevented, or reduced to a minimum, by the adoption of what is known as Labyrinth Packing. This type of packing is represented by Fig. 453, which illustrates different forms of its application. The rotating rings do not actually touch the surface, but the clearance between the surface and the rings is made as small as possible so as to reduce the leakage to a minimum. The steam seeking to escape has first to pass through a long series of these clearance spaces, at each one of which it is throttled or wire-drawn, and this form of gland has proved very effective for its purpose. The lower figure is a further improvement in this form of packing, which is the form adopted in the Brush-Parsons turbine. Its special feature is that the steam is wire-drawn at two points in each of the grooves in place of one point only, as with the usual form of packing.

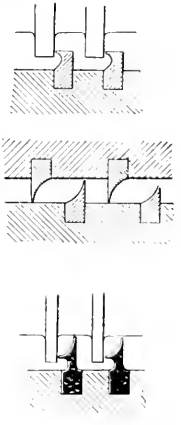

FIG. 453.

EXHAUST STEAM TURBINES.

Steam turbines are much more efficient in the use of low-pressure steam than reciprocating engines. The steam can be expanded with advantage to a lower pressure in a turbine, as the very large volume of the steam at low pressures can be more easily dealt with by turbine blades than in the cylinders of reciprocating engines, which would require to be inordinately large. The possible work to be obtained by expanding 1 lb. of dry steam in a piston engine from 14·7 lbs. pressure to, say, 9 lbs. pressure and exhausting at 3 lbs. pressure, is shown by the area *abcde* on the $t - \phi$ diagram (Fig. 454).

The possible work to be obtained per pound of steam in a steam turbine by expanding from 14·7 lbs. pressure to $\frac{1}{2}$ lb. pressure is shown by the

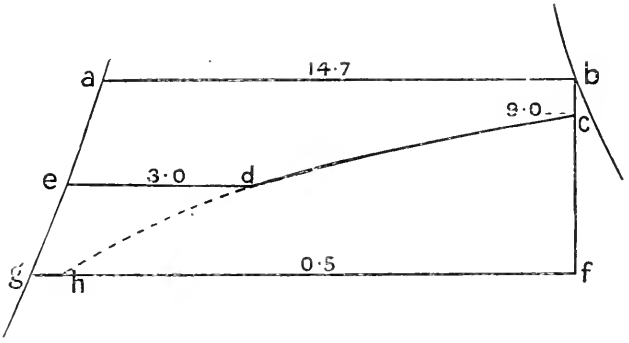

Fig 454.

area *abfg*. The extra work to be obtained per pound of steam by exhausting at $\frac{1}{2}$ lb. pressure in the piston engine, is shown by the area

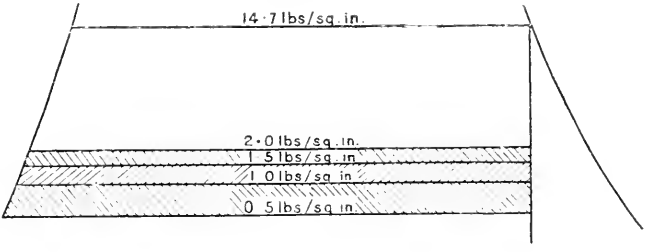

Fig. 455.

edgh, and this amount is not worth the extra cost required to obtain it.

The extra work to be obtained per pound of steam in a turbine by

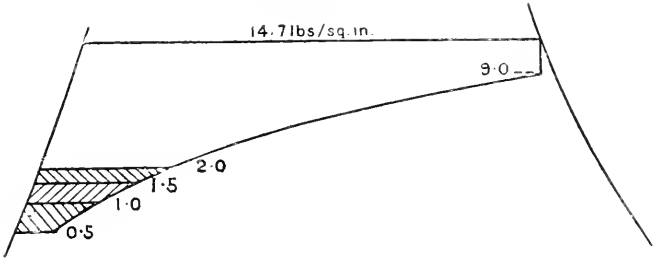

Fig. 456

increasing the degree of vacuum in a condenser is shown in Fig. 455, where the cross-lined area represents the extra work-area added as the final pressure is reduced by successive half-pound increments. Fig. 456

shows similarly the extra work to be obtained by similar reductions of back pressure in the piston engine.

These areas may be measured to find the numerical value of the work done in each case.

The high efficiency of turbines using low-pressure steam has led to the introduction of a class of turbine specially designed to utilize the exhaust steam from non-condensing engines. In many cases the low-pressure cylinder of condensing engines has been abandoned and an exhaust-steam turbine substituted in its place.

In ships of moderate speed reciprocating engines using high-pressure steam have been combined with low-pressure or exhaust turbines. The general arrangement is to have three main lines of shafting each driving an independent propeller; the centre shaft being driven by the turbine and the two side shafts by reciprocating engines. The economy obtained is about 12 per cent. higher than would be the case if reciprocating engines only were used.

Heat Accumulator.—Where the supply of exhaust steam from reciprocating engines is intermittent, as in rolling mill engines, etc., the supply of steam to the turbine may be rendered more uniform by passing the exhaust steam into a regenerator or heat accumulator on its way to the turbine. The heat accumulator is practically a large tank containing water into which the exhaust steam passes. The temperature of the exhaust steam is about 212° F., and it raises the water approximately to this temperature. When there is a deficiency of exhaust steam, the heat contained in this large volume of hot water in the accumulator supplies additional steam at some pressure below that due to its own initial temperature, sufficient in quantity to maintain the speed of the turbine until a fresh supply of exhaust from the engine is available. If too much exhaust steam is supplied at any one time for the size of the accumulator, then the surplus is blown into the atmosphere through a relief valve. If the supply of exhaust steam is insufficient to maintain the pressure and temperature in the accumulator, then a supplementary high-pressure steam supply from the boiler is passed through a reducing valve to make up the deficiency.

The use of dummies can be avoided in turbines using high-pressure steam by admitting steam at the centre of the turbine and allowing it to flow both ways. Such a double flow arrangement has been used, but the leakage past the blade tips is nearly doubled, and this form of turbine with high-pressure steam is abandoned. The double flow arrangement is, however, used with much success for exhaust steam turbines.

Temperature-Entropy Diagram.—The temperature-entropy diagram, Fig. 457, may be used for determining the work done by the steam, the dryness, and the volume of the steam after expansion in the steam turbine.

The ideal expansion curve in a steam turbine would be adiabatic, and would be represented on the $t - \phi$ diagram by a vertical line AB. The area ABCD represents the heat converted into kinetic energy per pound of steam in an ideal turbine. In an actual turbine the velocity acquired by the steam is reduced owing to the friction between the steam and the surfaces of the containing channels, and some of

the energy is also wasted in eddies. The result is that the kinetic energy available for useful work is less than that shown by the area ABCD by the amount of the kinetic energy reconverted into heat. The effect of this liberated heat is that the actual expansion curve follows more nearly a line AE to the right of AB. The dryness of the steam after adiabatic expansion would be represented by the ratio $\frac{CB}{CH}$; the actual dryness is $\frac{CE}{CH}$ which shows that the steam is drier in the latter case. The additional heat carried away by the steam to exhaust is shown by the area BEFG. The amount of heat therefore converted into work is given by the area DABC − FBEG.

The Mollier Diagram.—A new form of diagram introduced by Dr. Mollier is of great value and convenience in solving heat problems connected with the steam turbine (see Folding Chart at end of book). In this diagram total heat and entropy H − ϕ are used as the co-ordi-

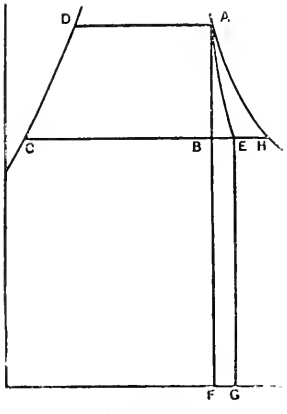

Fig. 457.

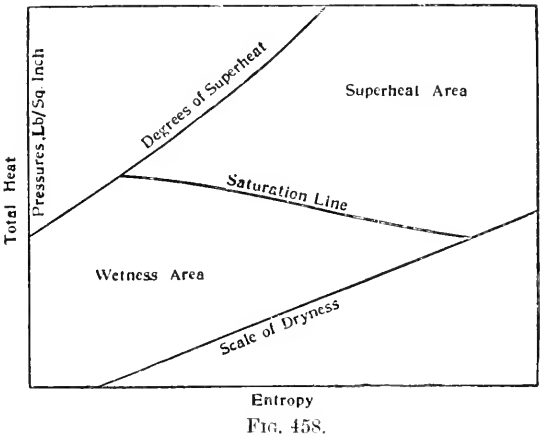

Fig. 458.

nates instead of temperature and entropy as in the T − ϕ diagram. Fig. 458 illustrates the general features of the diagram, and the figures which follow illustrate its use for practical purposes. Adiabatic expansion is represented by vertical lines. There are also drawn upon it lines of constant steam quality, as to dryness or superheat, as well as lines of constant pressure. The following examples illustrate its use in solving problems connected with the expansion of steam.

Example 1.—Steam having a superheat of 150° F. expands adiabatically from 160 lbs. to $1\frac{1}{2}$ lbs.; find the dryness of the steam after expansion and the heat units lost per pound of steam.

To find the state point of the steam before expansion trace the 160 lbs. pressure line until it meets the 150° superheat line at A (Fig. 459). As the expansion is adiabatic, it will be represented by the vertical line AB. The final state of the steam is shown at B where the adiabatic expansion line meets the $1\frac{1}{2}$ lbs. pressure line; the

dryness is 0·84. The loss of heat is represented by the length of the line AB. This length can be scaled off on the total heat scale; it is 329 B.Th.U. (see Folding Chart for scales).

EXAMPLE 2.—Steam at 200 lbs. pressure and dryness 0·99 is throttled to 50 lbs. pressure; find the quality of the steam as to dryness and superheat.

The state point of the steam before throttling is found by tracing the 200 lbs. pressure line until it meets the 0·99 quality line at C (Fig. 459). Since no work is done the total heat will be the same after throttling. To find the new state of the steam trace the horizontal constant heat line through C until it meets the 50 lbs. constant pressure line at D. Then D will be the new state of the steam; the diagram shows the steam to have 32° of superheat.

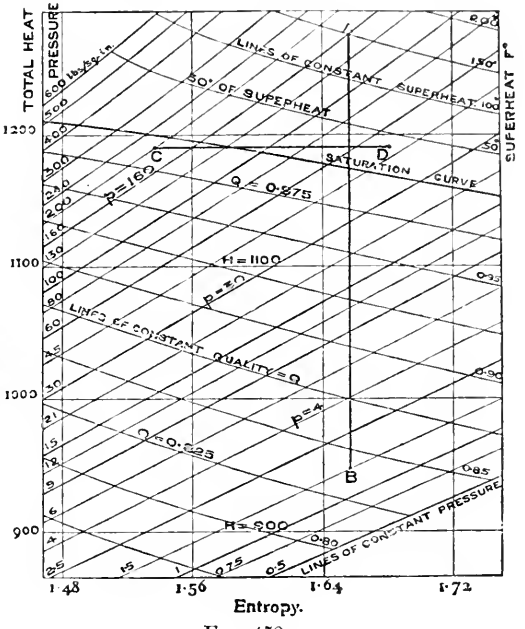

FIG. 459.

EXAMPLE 3.—Find the velocity attained by the steam in Example 1. Measure the vertical line AB (Fig. 459) assuming it to be drawn on the standard Mollier chart. Then by measuring off this length on the velocity scale at the left-hand side of the chart the velocity of the steam may be obtained. In this case it is 4065 feet per second.

The same result may be obtained from the formula—

$$v = 224\sqrt{\text{B.Th.U.}}$$
$$= 224\sqrt{329} = 4065.$$

REACTION TURBINE.

General Principles of Blading Design.—The calculations for the blades of a Parsons turbine are not difficult from a theoretical point of view. The limitations imposed by practical considerations, however, cause the actual calculations to be a little more complex. Thus

the exact condition of the steam is not accurately known at all points of its passage through the turbine, and certain assumptions as to its condition are therefore necessary.

When a turbine is required for any purpose, the horse-power, suitable speed of rotation, boiler pressure, superheat, and probable vacuum may be considered as known, and the first question to be determined is the total weight of steam to be dealt with in the turbine.

Weight of steam to be dealt with—Condition of the steam.—The amount of heat per pound of steam turned into work by a perfect turbine working between the given range of pressure and expanding adiabatically between these pressures, is found most easily by the aid of the

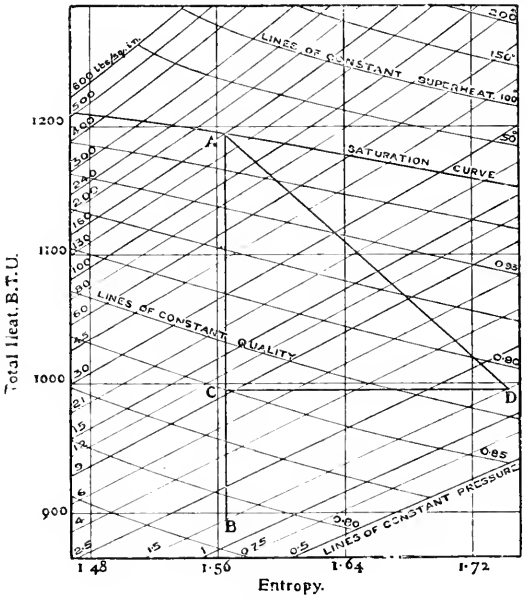

FIG. 460.

Mollier diagram, by drawing a line starting from the known pressure line, and at a position on that line depending on the quality of the steam as to dryness or superheat, and producing it vertically to the known final pressure line (see Fig. 460). The actual amount of this heat which will be converted into work must be assumed from previous experience of similar turbines, and may be taken to be represented by the ratio of AC to AB. This efficiency ratio varies in practice from 55 per cent. to 75 per cent., which shows that in practice the expansion of the steam does not follow the adiabatic law.

Assuming that the loss of efficiency has been due to leakage past the tips of the blades, and friction and eddies of the steam during expansion, then the whole of the initial heat in the steam which has not been

converted into useful work must be present in the steam at exhaust; in other words AB − AC = BC = the unused heat present in the exhaust. The condition of the steam after expansion may be found by following the constant pressure line BD through B till it meets the total heat line CD drawn through C. The point D shows the total heat and dryness of the steam after expansion. The total heat after expansion under practical conditions in the turbine is seen to be greater at the final pressure than it would have been if the expansion had been adiabatic. The state of the steam at points between A and D may be considered to lie on the line AD, but may actually lie above or below AD. The more accurately the state of the steam is determined between A and D as it passes through the turbine, the more accurately the proportions of the blades and passages may be designed. Knowing the work done in heat units per pound of steam from the diagram, it is a simple calculation to determine the pounds of steam required per hour for the given power. The turbine passages are usually designed to take a slightly larger quantity of steam than is required for full load. The mean blade speeds of a Parsons turbine vary from 80 ft. per second in the h.p. section of a marine turbine to 200 ft. per second in the l.p. section. In turbines adapted for electrical work the velocities are higher, varying from 100 to 170 ft. per second in the h.p. section to 350 ft. or more in the l.p. section. In marine turbines lower rotational speeds are necessary than in stationary practice, because the efficiency of the propeller falls off considerably as the speed of rotation increases. On this account, namely the limitation of rotational speed, the weight of marine turbines per unit of power is correspondingly higher. The weight of turbines varies inversely as the square of the revolutions approximately; hence high speeds are advisable where possible.

General Equations involved in Turbine Design.—The following equations show the relations existing between the various factors required for use in turbine design.

Let N = revolutions per minute of rotor;
D = mean diameter of blade circle in inches;
V_T = velocity of blades in feet per second;
V_s = velocity of steam in feet per second.

Then
$$V_T = \frac{\pi DN}{12 \times 60}$$

or
$$D = \frac{12 \times 60 V_T}{\pi N} = \frac{229 V_T}{N}$$

This equation shows that when the number of revolutions has been fixed, the diameter of the turbine depends upon V_T. The larger V_T is made the larger the diameter of the turbine, and the shorter the blades for a given power. The weight of the turbine rapidly increases with the diameter, so that to save weight V_T is required to be small.

A small V_T requires, however, a larger number of stages and an increased length of turbine. The maximum V_T is limited by the stresses

produced by centrifugal force; the minimum V_T is limited by the increased cost of a long turbine.

The blade speed fixes the steam velocity V_S. A high steam velocity with a given peripheral speed V_T gives more work per stage with fewer stages and a shorter turbine.

The ratio $\frac{V_T}{V_S}$ varies, but for turbines driving electrical generators is generally taken = 0·6, and for marine turbines the ratio lies between 0·30 and 0·50 for the first row of guide blades.

Annulus Factor.—The area for the passage of the steam if the turbine were free from the obstruction of the blades would be the annular area between the rotor and the inside of the casing. Also, if the blades permitted of the flow of the steam in a direction parallel to the axis of the turbine, the axial velocity of the steam would be the same as the steam velocity V. The height h of the blades would then be—

$$h = \frac{W \times \text{volume of steam}}{\pi D \times V}$$

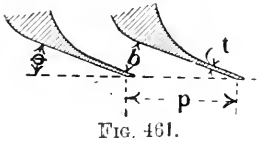

FIG. 461.

The axial velocity is, however, only V sin θ, where θ is the inclination of the vane at discharge. It is therefore necessary to multiply the height h found above by a factor called the annulus factor.

Let p = pitch of blades (Fig. 461);
θ = outlet angle of blades;
t = thickness of blades;
b = width of passage;
D = mean diameter of row of blades in feet;
h = height of blades in feet;
n = number of blades per row;
u = total volume of steam passing through the blades per second;
V = velocity of steam.

Then—

$$b = p \sin \theta - t$$

$$n = \frac{\pi D}{p}$$

Total area of steam passage $= \frac{\pi D}{p} b \,.\, h$

and $$u = V \,.\, \frac{\pi D}{p} b \,.\, h$$

Substituting for b and transposing

$$h = \frac{up}{\pi D V (p \sin \theta - t)}$$

The leakage past the tips of the blades has not been considered; this may be taken to balance the obstruction caused by the blade thicknesses.

Taking $\theta = 19^\circ\ 27'$ and omitting t, $\sin\theta = \frac{1}{3}$

$$h = \frac{u\rho}{\pi D V p^{\frac{1}{3}}}$$

$$h = \frac{3u}{\pi D V} \quad \ldots\ldots\ldots\ldots\ldots\ldots \quad (2)$$

Also $\frac{u}{V}$ = area through which the steam passes at a velocity V ; and πDh = annular area between the rotor and casing. Then equation (2) shows that the annular area between the rotor and casing is about three times the area required for the steam when θ is about 20°. This ratio or annulus factor varies for different thicknesses of blades and different angles.

A common rule is to make the area of the annulus three times the area required for the steam.

Number of Stages.—The number of stages may be determined by finding the work done per stage from the velocity diagram, and assuming the work done is the same in each stage the number of stages N is—

$$N = \frac{\text{total work}}{\text{work per stage}}$$

Experience is again useful in fixing upon a suitable number of stages, and the following empirical formula covers average practice :—

$$N V_T^2 = \text{constant}$$

The constant varies from 2,200,000 to 2,600,000 for electrical turbines, and from 1,400,000 to 1,600,000 for marine turbines.

The greater the blade velocity V_T the less the number of rows of blades.

The theoretical basis of this formula may be shown as follows :—

Let Fig. 462 represent the velocity diagram for one stage of a reaction turbine.

V is the absolute velocity of the steam entering the turbine ; V_T is the blade velocity. Then V_b is the relative velocity of the steam with regard to the blade, and β is the correct angle for the blade so that the steam may pass to the blade without shock.

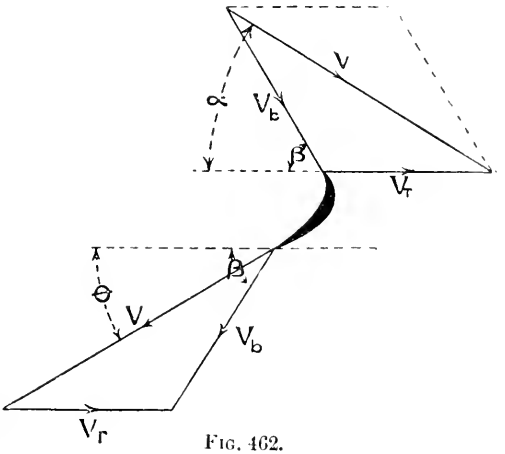

FIG. 462.

The relative velocity of the steam on leaving the blade is V and is greater than the relative velocity of the steam V_b on entering, owing

to the velocity developed in the moving blades. It is assumed that the velocity of the steam leaving a row of blades is not destroyed but is available in the succeeding row of blades.

Considering the kinetic energy of the steam before entering the blades and the kinetic energy on leaving the blades, the work done will be the difference between them, that is, work done per pound of steam is—

$$\frac{V^2 - V_b^2}{2g}$$

Let $V = cV_T$, where c is a constant.

Then from pure geometry—

$$V^2 = V_b^2 + V_T^2 + 2V_TV_b \cos \beta$$

and

$$\begin{aligned} V^2 - V_b^2 &= V_T^2 + 2V_TV_b \cos \beta \\ &= V_T^2 + 2V_T(V \cos \theta - V_T) \\ &= V_T^2 + 2V_T(cV_T \cos \theta - V_T) \end{aligned}$$

Work per stage including wheel blade and guide blade

$$= 2\frac{V^2 - V_b^2}{2g} = \frac{2V_T^2(2c \cos \theta - 1)}{2g} = \frac{V_T^2(2c \cos \theta - 1)}{g}$$

By using the last expression for the work done per stage, a formula may be deduced showing the relation between V_T and the number of stages.

Let $\theta = 20^\circ$

$$c = \frac{V}{V_T} = \frac{1}{0{\cdot}6} = 1{\cdot}666$$

$$\text{work per stage} = \frac{V_T^2(2 \times 1{\cdot}666\dot{6} - 1)}{32{\cdot}2} = V_T^2 \times 0{\cdot}06624$$

Let U = the heat units actually converted into work from the stop valve to the condenser.

N = number of stages.

Then $NV_T^2 \times 0{\cdot}06624 = U \times 778$.

Assuming an average value for U of 200 B.Th.U.

$$N \cdot V_T^2 = \frac{200 \times 778}{0{\cdot}06624}$$

$$NV_T^2 = 2{,}348{,}000 \quad . \quad . \quad . \quad . \quad . \quad . \quad (1)$$

The constant varies with the ratio of $\frac{V}{V_T}$ with θ and with U.

The formula gives the number of stages, assuming a constant velocity V_T throughout the turbine. V_T is not constant except over a short length, but by considering any given fall of total heat over the length where V_T is approximately constant, the number of stages in this length may be determined. This method is useful as a first approximation.

Example.—Assuming $\frac{1}{3}$ of the work is done in the h.p. portion of the turbine and using formula (1)—

$$NV_T^2 = 2{,}348{,}000$$

Let $V_T = 140$

then $$N = \frac{1 \times 2{,}348{,}000}{3 \times 140 \times 140} = 39{\cdot}9 \text{ (say 40 stages)}$$

Example of Blading Design, Parsons Type Turbine.—The design of a reaction steam turbine may be illustrated by the following example. Suppose a marine turbine is required of 12,000 H.P. Dry saturated steam is to be used having an initial pressure of 160 lbs. per square inch. The condenser pressure is to be 1 lb. A number of arbitrary assumptions are made which are based on past experience with similar turbines. Assume the revolutions to be 340 per minute and the peripheral velocity V_T at the high-pressure end to be 100 ft. per second. Assume $\frac{V_T}{V_s} = 0{\cdot}4$, also an efficiency ratio of 65 per cent. Suppose 13·5 lbs. of steam are required per hour per horse-power and that 0·5 lb. leak past the dummies per hour per horse-power, then the amount of steam passing through the turbine is 13 lbs. per hour per horse-power.

Heat converted into Work in the Turbine.—The amount of heat converted into work, if the expansion is adiabatic, may be obtained

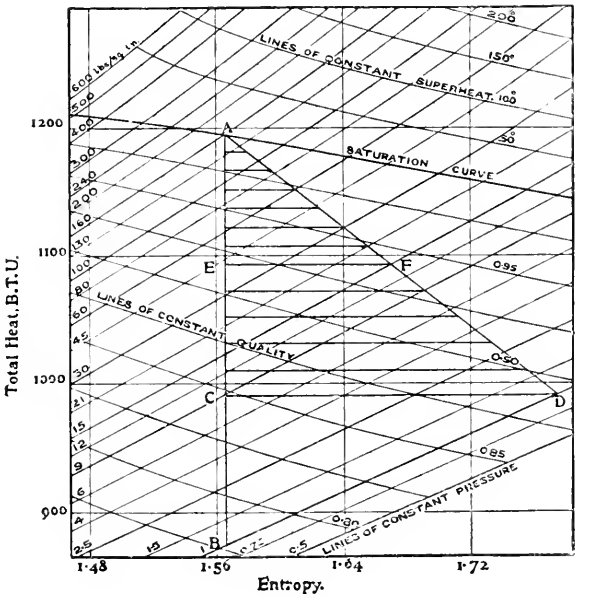

FIG. 463.

either from the H − ϕ diagram or the $t - \phi$ diagram. Using the H − ϕ diagram (Fig. 463), the vertical line AB drawn from the initial pressure 160 lbs. to the final pressure of 1 lb. represents the heat converted into work when the expansion is adiabatic. From the

diagram AB = 322 B.Th.U. Assume an efficiency ratio of 65 per cent. and make AC = 65 per cent. of AB. Draw CD to meet the 1 lb. pressure line through B at D. Then D is the state of the steam at the end of the expansion, the numerical vulue of which is seen by reference to the scale of the lines of constant quality and total heat. A straight line joining A and D will represent approximately the state of the steam during expansion.

Division of the Work between H.P. and L.P. Drums.—For equal work in the high-pressure and low-pressure turbine bisect AC in E and draw EF horizontally to meet AD in F. Then the pressure and dryness of the steam on leaving the high-pressure turbine are shown at F.

A usual arrangement is to have seven expansions in the h.p. turbine and five expansions in the l.p. turbine. Allowing equal heat drop in each expansion, AE may be divided into seven divisions and EC into five divisions. The pressure and dryness of the steam at each stage may be determined by drawing horizontal lines to meet the assumed expansion line AD.

Peripheral Dimensions of the H.P. Drum.—The velocity of the steam entering the first expansion is $V_s = \frac{V_T}{0{\cdot}4} = \frac{100}{0{\cdot}4} = 250$ ft. per second.

The mean diameter of the blades in the first expansion (see p. 425)

$$= \frac{V_T \times 229}{340} = \frac{100 \times 229}{340} = 67{\cdot}35 \text{ inches.}$$

The weight of steam passing through the turbine per second

$$= \frac{12{,}000 \times 13}{60 \times 60} = 43\tfrac{1}{3} \text{ pounds.}$$

The volume of 1 lb. of steam at 160 lbs. pressure = 2·834 cubic feet.

Therefore total volume entering the first expansion = $43\frac{1}{3} \times 2{\cdot}834$ = 122·8 cubic feet per second.

Let h = height of blade in feet; annulus factor = 3:

$$h = \frac{3 \times 122{\cdot}8 \times 12}{\pi \times 67{\cdot}35 \times 250} = 0\ 08354 \text{ ft. or } 1{\cdot}00 \text{ in.}$$

The diameter of the h.p. drum is 67·35 − 1 = 66·35 in.

The blade height in the last expansion of the h.p. turbine is not so easily obtained, as the mean diameter of the blades is unknown until the blade height is determined.

The area of the annulus = πDh.

Let W = weight of steam per second; v = volume of steam in cubic feet per pound; V_s = steam velocity; annulus factor = 3.

Then area required for annulus—

$$= \frac{Wv}{V_s} \times 3 = \frac{Wv}{V_T} \times 3 \times 0{\cdot}4$$

$$V_T = \frac{\pi DN}{60} \text{ where N = revs. per min.}$$

$$\therefore \pi Dh = \frac{W v \times 60 \times 0{\cdot}4 \times 3}{\pi D N}$$

$$D^2h = \frac{W v \times 72}{\pi^2 N}$$

$$= \frac{43\frac{1}{3} \times 72}{\pi^2 \times 340} \times v = 0{\cdot}9298v$$

If D and h are in inches $D^2h = 0{\cdot}9298 \times 1728v = 1606v$.

The mean diameter of the blade heights may also be written $D = 66{\cdot}35 + h$, where h is not yet known.

The volume v at the beginning of the last expansion is 18 cubic feet.

$$\therefore D^2h = 1606 \times 18 = 28{,}910$$
$$D = 66{\cdot}35 + h.$$

From these equations D and h may be determined. An easy method of doing this is to substitute two or three trial values of D. By this method, $D = 72{\cdot}94$ ins. and $h = 5{\cdot}59$ ins. The blade heights for the intermediate groups may be obtained in a similar manner by substituting for v the volume at the beginning of each group. The blade heights so obtained are given in column 8 of Table given below.

A common method of determining the intermediate blade heights is to multiply the preceding blade height by a factor. The common factor $= \sqrt[n-1]{\frac{\text{first blade height}}{\text{last blade height}}}$ where n = number of expansions. The factor in this case with seven expansions $= \sqrt[6]{\frac{5{\cdot}59}{1{\cdot}00}} = 1{\cdot}332$. The factor 1·332 is called the common ratio, and the blade heights obtained by this method are given in column 7 of the Table. The difference in sizes obtained by these two methods is very small, as will be seen by comparing columns 7 and 8. The blade heights obtained by the common factor will be the sizes adopted.

HIGH-PRESSURE TURBINE.

No. of expansion.	Absolute pressure at beginning.	Dryness of steam at beginning.	Volume per lb.		Mean diameter of blades.	Height of blades, h.	
			Dry steam.	Actual volume.		By common factor.	By using actual volume.
					inches.		
1	160	1·000	2·834	2·834	67·35	1·00	1·00
2	116	0·999	3·818	3·81	67·68	1·33	1·33
3	83	0·989	5·28	5·17	68·12	1·77	1·79
4	59	0·971	7·28	7·07	68·71	2·36	2·40
5	42	0·962	10·02	9·64	69·50	3·15	3·20
6	30	0·954	13·74	13·10	70·55	4·20	4·23
7	21·2	0·947	19·00	18·00	71·94	5·59	5·59

The steam velocity at the beginning of the first expansion will be

250 feet per second; the velocity at the end of this expansion will be greater than this owing to the increased volume due to expansion. The velocity will be proportional to the volume, as the blades are all of the same height and have the same inclination. The volume of 1 lb. of steam at the end of the first expansion is 3·81 cubic feet; the volume at the beginning is 2·834 cubic feet. The velocity of the steam at the end of the expansion will therefore be $\frac{3{\cdot}81}{2{\cdot}834} \times 250 = 336$ feet per second. The mean peripheral velocity of the blades in the second expansion will be slightly greater owing to the increased blade heights. The mean diameter is 66·35 + 1·33 = 67·68 ins.

$$\therefore V_T = \frac{67{\cdot}68 \times 340}{229} = 100{\cdot}5 \text{ ft per second}$$

$$\text{The steam velocity} = \frac{100{\cdot}5}{0{\cdot}4} = 251 \text{ ft. per second.}$$

(Note: ratio $\frac{V_T}{V_S} = 0{\cdot}4$.)

By similar calculations the steam and blade velocities for the remaining expansions are obtained as shown in Fig. 464.

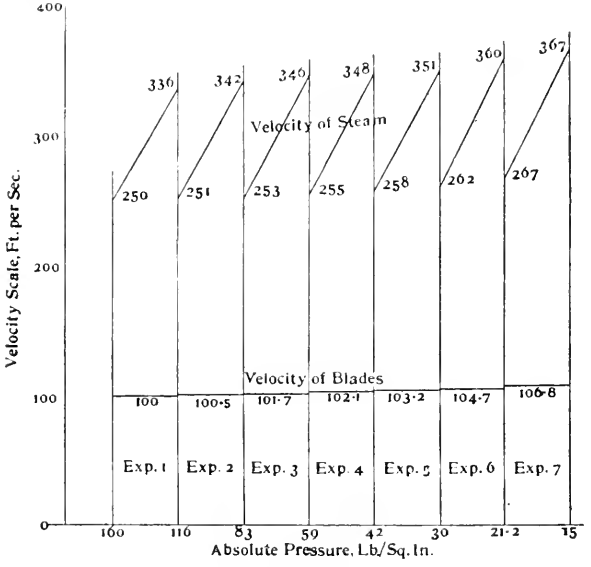

FIG. 464.

Number of Stages.—The number of stages required in each expansion can be determined by dividing the heat drop per expansion by the work done per stage. A velocity diagram may be drawn for each stage and the work done may be calculated. Instead of drawing a velocity diagram for each stage separately, the *arithmetical* or the

geometrical mean of the initial and final velocities of each expansion may be taken and will give a sufficiently accurate average result. The arithmetical mean for the first expansion is $\frac{336 + 250}{2} = 293$. The geometrical mean is $\sqrt{336 \times 250} = 290$. The difference between them is small, but the geometrical mean is slightly more accurate and will be used throughout.

Fig. 465 shows the average velocity diagram for the first expansion, from which can be determined the relative velocity of steam, viz. 199 ft. per second.

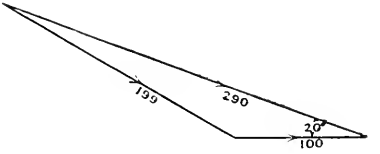

FIG. 465.

The work done per pound per row $= \frac{(290)^2 - (199)^2}{2 \times 32{\cdot}2 \times 778} = 0{\cdot}888$ B.Th.U.

The work done per stage, consisting of one row of guide blades and one row of moving blades, is $0{\cdot}888 \times 2 = 1{\cdot}776$ B.Th.U. The total heat transformed into work in the turbine with an efficiency ratio of $0{\cdot}65 = 322 \times 0{\cdot}65 = 209$ B.Th.U.

If the work in the high- and low-pressure turbines is to be equal the work done in the h.p. turbine $= \frac{209}{2} = 104{\cdot}5$ B.Th.U. The work done in each of the seven expansions is $\frac{104{\cdot}5}{7} = 14{\cdot}93$ B.Th.U.

Assuming an average blade efficiency of 75 per cent. in the h.p. turbine, then the number of stages in the first expansion

$$= \frac{14{\cdot}93}{1{\cdot}776 \times 0{\cdot}075} = 11{\cdot}2 \text{ stages.}$$

Similarly the number of stages in the remaining expansions may be obtained by drawing their average velocity diagram. When the number of stages is not a whole number, a slight adjustment must be made in the various expansions. The calculated stages, and the stages adopted are shown below.

No. of expansion.	No. of stages.	
	By calculation.	Stages adopted
1	11·2	11
2	10·93	11
3	10·84	11
4	10·75	11
5	10·52	10
6	10·02	10
7	9·72	10

The total number of stages adopted is thus 74 stages.

Using the approximate formula—

$$NV_T^2 = 1{,}500{,}000 \text{ for the whole turbine;}$$

and taking $V_T = 100$; $N = 150$; for the h.p. turbine $= \frac{N}{2} = 75$ stages.

Low-Pressure Turbine.—The mean velocity of the blades at the beginning of the low-pressure turbine may be made $\sqrt{2}$ times the velocity of the blades at the beginning of the h.p. turbine.

$$V_T = 100\sqrt{2} = 140 \text{ ft. per second}$$

$$V_s = \frac{140}{0{\cdot}4} = 350 \text{ ft. per second}$$

$$\text{Diameter} = \frac{V_T \times 229}{340} = \frac{140 \times 229}{340} = 94{\cdot}28 \text{ ins.}$$

The volume of the steam entering the low-pressure turbine is 24·7 cubic feet per pound.

$$\therefore \text{ height of blades in first expansion} = \frac{3 \times 43\frac{1}{3} \times 24{\cdot}7 \times 12}{\pi \times 94{\cdot}28 \times 350}$$

$$= 0{\cdot}3176 \text{ ft., or } 4{\cdot}46 \text{ ins.}$$

Diameter of low-pressure drum $= 94{\cdot}28 - 4{\cdot}46 = 89{\cdot}82$ ins.

The mean diameter of the blades and their height may be obtained as before by using the two equations—

$$D^2h = 1606v$$

$$D = 89{\cdot}82 + h.$$

At the beginning of the last expansion $v = 172$ cubic feet. By substituting this value of v in the above equation, and taking one or two trial values for D, the height of the blades is found to be 22·07 ins. and D = 111·89 ins.

This blade height is too large for a drum only 89·82 ins. in diameter, as the usual limits of blade heights are from 3 per cent. to 15 per cent. of the drum diameter. It may, however, be used for obtaining the common ratio, and the length of a few intermediate groups of blades may be thus determined.

$$\text{Common ratio} = \sqrt[4]{\frac{22{\cdot}07}{4{\cdot}46}} = 1{\cdot}491$$

The heights of the blades in the five expansions will thus be 4·46; 6·65; 9·92; 14·7 and 22·07 ins.

LOW-PRESSURE TURBINE.

No. of expansion.	Absolute pressure at beginning.	Dryness of steam at beginning.	Volume per pound.		Mean diameter of blades.	Height of blades, h.	
			Dry steam.	Actual volume.		By common factor.	By using actual volume.
					inches.		
1	15·0	0·91	26·27	24·7	94·28	4·46	4·46
2	9·0	0·93	42·36	39·4	96·47	6·65	6·80
3	5·4	0·92	68·31	62·9	99·74	9·92	10·15
4	3·2	0·91	111·4	99·0	99·74	[9·92]	—
5	1·8	0·90	191·3	172·0	99·74	[9·92]	—

The heights of the last two rows of blades are too high for the diameter of the rotor and cannot be used. This difficulty may be overcome by again increasing the diameter of the drum or by increasing the discharge angle of the blades. Both methods give increased area for the passage of the steam with a reduced blade height. Increasing the diameter adds to the weight and cost, and increases the stress in the material. In this case the last three rows of blades will all be made the same height, namely 9·92 ins. The above Table gives the mean diameter and height of blades. Assume the outlet angle of the fourth expansion to be 30° instead of 20°. Neglecting the thickness of the blades, the annulus factor is $\frac{1}{\sin 30} = \frac{1}{0{\cdot}50}$. Allowing for the blade thickness, axial clearance and radial clearance, the factor may be assumed to be $\frac{1}{0{\cdot}48}$. The steam velocity may be obtained from the following formula :—

$$V_s = \frac{Cu}{\pi D h}$$

where C is the annulus factor and u the total volume of steam passing through at this point.

$$V_s = \frac{1 \times 43\frac{1}{3} \times 99 \times 12 \times 12}{0{\cdot}48 \times \pi \times 99{\cdot}74 \times 9{\cdot}92} = 414 \text{ feet per second.}$$

Similarly, by assuming the last expansion to have an outlet angle of 42°, the velocity of the steam entering the last expansion may be obtained. Sin 42° = 0·72. Assume annulus factor $= \frac{1}{0{\cdot}66}$

$$V_s = \frac{1 \times 43\frac{1}{3} \times 172 \times 12 \times 12}{0{\cdot}66 \times \pi \times 99{\cdot}74 \times 9{\cdot}92} = 523 \text{ feet per second}$$

The ratio $\frac{V_T}{V_s}$ is reduced in the last two expansions by this method.

A high outlet velocity means a considerable waste of kinetic energy, and the outlet angles for the last two expansions are so chosen as to

make the final velocity of the steam not more than 900 ft. per second. In the present case the outlet velocity is 900 ft. per second.

Fig. 466 shows the steam and blade velocities throughout the low-pressure turbine.

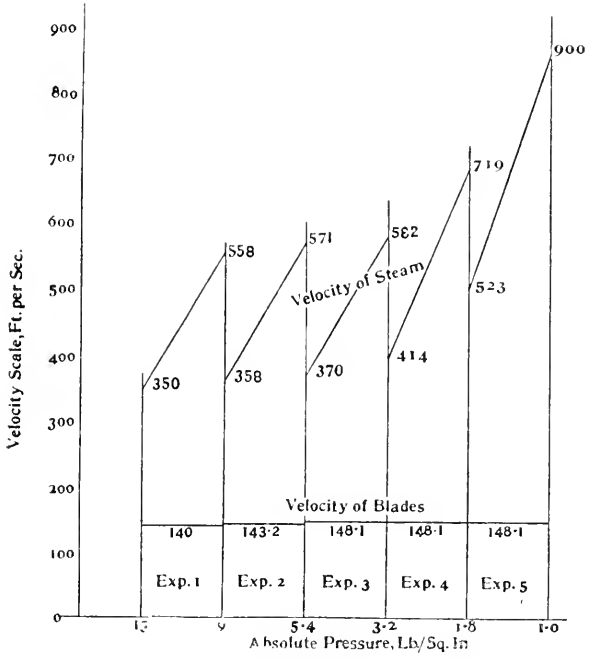

FIG. 466.

The rows of blades in the last expansion are called wing blades, and the rows of blades in the fourth expansion are called semi-wing blades.

Number of Stages.—The number of stages in the low-pressure turbine may be obtained as in the h.p. turbine, by drawing the velocity diagrams and finding the geometrical mean of the velocity of the steam entering and leaving on expansion. The work done per stage can then be calculated and the number of stages obtained as before.

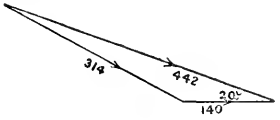

FIG 467.

For the first expansion the mean velocity is $\sqrt{558 \times 350} = 442$ ft. per second.

The relative velocity is obtained from the velocity diagram (Fig. 467), and is 314 ft. per second.

$$\text{Work done per row} = \frac{(442)^2 - (314)^2}{2 \times 32{\cdot}2 \times 778} = 1{\cdot}93 \text{ B.Th.U.}$$

$$\text{The work to be done per expansion} = \frac{104{\cdot}5}{5} = 20{\cdot}9 \text{ B.Th.U.}$$

Assuming that the blade efficiency is 80 per cent., the number of stages $= \frac{20{\cdot}9}{2 \times 1{\cdot}93 \times 0{\cdot}80} = 6{\cdot}77$ stages.

By similar calculations the velocities are obtained and the number of stages calculated for each expansion. These are given in the following table: —

LOW-PRESSURE TURBINE.

No. of expansion.	Average velocity.	Heat drop per stage.	No. of stages.	
			By calculation.	Adopted.
1	442	3·86	6·77	7
2	452	4·014	6·57	6
3	464	4·298	6·07	6
4	546	5·190	5·03	5
5	686	6·710	3·89	4

EXAMPLE OF BLADING DESIGN. CURTIS TYPE TURBINE.

To determine the blade angles of a two-pressure stage Curtis turbine compounded for velocity: Assume the horse-power to be 2000; initial pressure of steam to be 165 lbs. per square inch and superheated 100° F.; final pressure 1·5 lbs. per square inch.

First Stage.—Let the steam expand to 15 lbs. in the first pressure stage. The Mollier diagram may be used for determining the quantity of heat converted into kinetic energy and the corresponding dryness of the steam after expansion.

The pressure at the throat of the nozzle is $0{\cdot}58 \times 165 = 95{\cdot}7$ lbs.

Select A on the Mollier diagram, Fig. 468, having a pressure of 165 lbs. and 100° F. superheat; total heat 1251 B.Th.U.

Draw a vertical line AB representing the adiabatic expansion of the steam in the nozzle to 15 lbs. There is a slight loss of kinetic energy in the nozzle due to friction and eddies, which is returned to the steam as heat, so that the actual heat change will be less than AB. Assume an efficiency of 92 per cent. for the nozzle and make AC 92 per cent. of AB. Draw CD at constant total heat to meet the constant pressure line through B. Then D is the condition of the steam at the end of the expansion in the nozzle, before entering the moving blades. There is practically no energy loss in the converging part of the nozzle, so that AE will represent the condition of the steam during expansion to the throat and ED the approximate condition of the steam during expansion in the diverging part of the nozzle. The point E is fixed by noting that the pressure at the throat = 0·58 of the initial pressure

$$= 0{\cdot}58 \times 165 = 95{\cdot}7 \text{ lbs.}$$

Velocity of the Steam.—The velocity of the steam at the point D is obtained from the formula

$$V = 224\sqrt{B.Th.U.}$$

From the Mollier diagram the

$$B.Th.U. = \tfrac{92}{100} \times AB = \tfrac{92}{100} \times 186 = 171 \text{ B.Th.U.}$$
$$V = 224\sqrt{171} = 2930 \text{ ft. per second.}$$

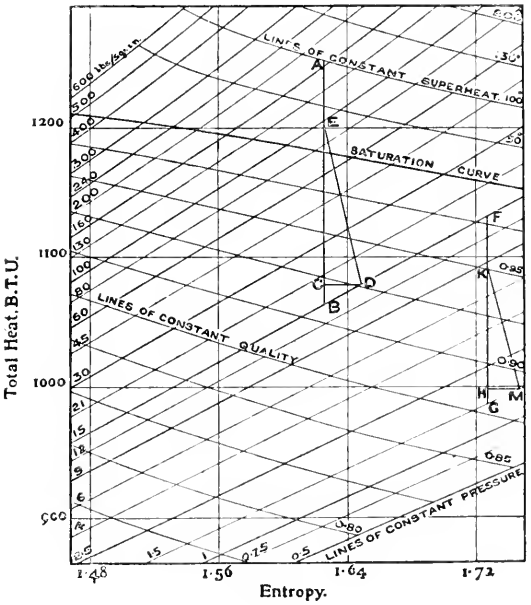

Fig. 468.

The maximum efficiency is obtained, in a single wheel impulse turbine, when the velocity of the wheel is nearly 0·5 the steam velocity. The velocity adopted in practice is much lower than this. Assuming a ratio of 0·35, the velocity of the wheel would be $2930 \times 0{\cdot}35 = 1026$ ft. per second. By using two sets of moving blades the velocity is taken out of the steam in two steps, and the blade velocity may then be $1026 \times \frac{1}{2} = 513$ feet per second. By using three sets of moving blades the peripheral velocity may be still further reduced; and so on.

Assume a blade speed of 500 ft. per second and that the nozzles are inclined to the plane of the wheel at an angle of 20°. Draw the velocity diagram (Fig. 469).

AB = 2930 ft. per second; BC = 500 ft. per second; AC = relative velocity of steam = 2460 ft. per second by measurement. The loss of velocity in the moving blades varies considerably, but taking

the loss at 10 per cent., CD = $\frac{9}{10}$ × AC = 2214 ft. per second. Make DE = 500 ft. per second; then EC is the absolute velocity of the steam leaving the moving blades; EC = 1770 ft. per second by measurement.

Similarly, assuming a loss of 10 per cent. of velocity in the stationary blades, and remaining moving blades, the remaining velocity triangles

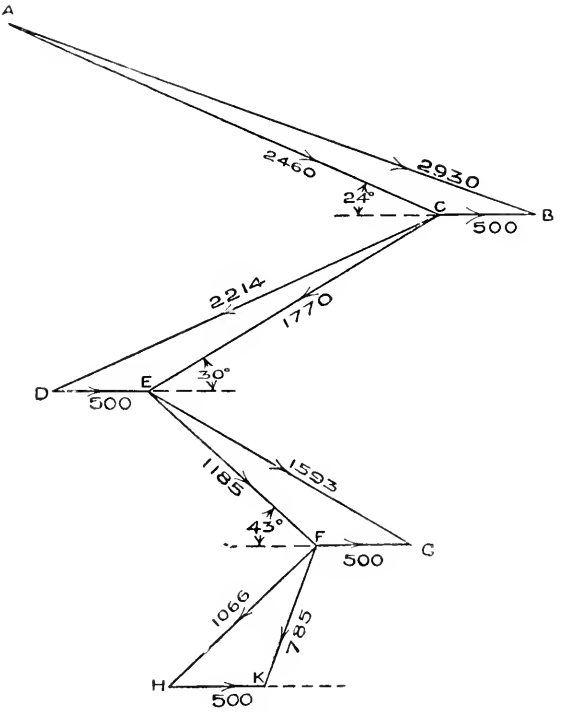

FIG. 469.

are drawn. The final absolute velocity of the steam leaving the wheel is FG = 785 ft. per second. For accurate results the velocity loss should be carefully obtained from actual experiments.

Efficiency.—The loss of kinetic energy by friction and eddies reappears as heat in the steam. The loss of energy in the first row of moving blades, or the heat increase

$$= \frac{(2460)^2 - (2214)^2}{2 \times g \times 778} = 22{\cdot}9 \text{ B.Th.U.}$$

Energy loss or heat increase in guide blades

$$= \frac{(1770)^2 - (1593)^2}{2 \times g \times 778} = 11{\cdot}8 \text{ B.Th.U.}$$

Energy loss or heat increase in second row of moving blades

$$= \frac{(1185)^2 - (1066)^2}{2 \times g \times 778} = 5{\cdot}3 \text{ B.Th.U.}$$

Loss by energy left in steam as final velocity

$$= \frac{(785)^2}{2 \times g \times 778} = 12{\cdot}3 \text{ B.Th.U.}$$

Total loss of energy to steam $= 22{\cdot}9 + 11{\cdot}8 + 5{\cdot}3 + 12{\cdot}3.$
$= 52{\cdot}3$ B.Th.U.

$\therefore$ heat converted into work $= 171 - 52{\cdot}3 = 118{\cdot}7$ B.Th.U.

The heat available for conversion into work if adiabatic expansion had taken place = 186 B.Th.U.

Therefore efficiency of the stage (nozzles and vanes)

$$= \frac{118{\cdot}7}{186} \times 100 = 63{\cdot}8 \text{ per cent.}$$

The angles of the vanes may be obtained from the velocity diagram by measurement, and are as shown in Fig. 469.

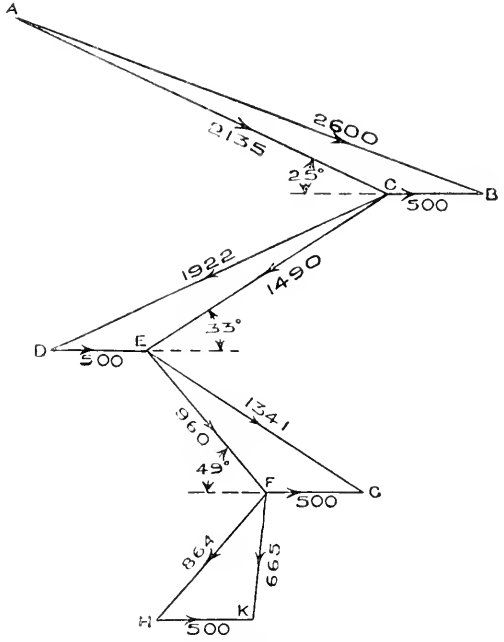

Fig. 470.

Second Stage.—The total heat available in the steam entering the second stage is $1251 - 171 + 52{\cdot}3 = 1132{\cdot}3$ B.Th.U. The pressure is 15 lbs., and from the Mollier chart the dryness is 0·981.

The velocity diagram for the second stage may be drawn in a similar manner and the angles of the vanes obtained.

On the Mollier chart (Fig. 468) produce BD to F, where F represents the total heat and given dryness. FG represents adiabatic expansion in the second set of nozzles to 1·5 lbs. Assuming the nozzle efficiency as 92 per cent.; FH = 0·92 × FG. Draw HM at constant total heat to meet the constant pressure line through G. Then FKM represents approximately the state of the steam during expansion in the nozzles. The point K is obtained in a similar manner to the point E by assuming no loss in the converging part of the nozzle.

By measuring the Mollier chart FG = 147 B.Th.U.; ∴ FH = 135 B.Th.U

$$V = 224\sqrt{135} = 2600 \text{ ft. per second.}$$

Draw the velocity diagram as before (Fig. 470). The velocities are as follows: AB = 2600; BC = 500; AC = 2135; CD = 1922; CE = 1490; EG = 1341; EF = 960; FH = 864; FK = 665; HK = 500.

Efficiency.—The heat increase due to loss of energy in the first row of blades

$$= \frac{(2135)^2 - (1922)^2}{2g \times 778}$$
$$= 17{\cdot}3 \text{ B.Th.U.}$$

Similarly heat increase in guide blades

$$= \frac{(1490)^2 - (1341)^2}{2g \times 778} = 8{\cdot}4 \text{ B.Th.U.}$$

Similarly heat increase in last row of moving blades

$$= \frac{(960)^2 - (864)^2}{2g \times 778} = 3{\cdot}4 \text{ B.Th.U.}$$

Loss by energy left in steam as final velocity

$$= \frac{(665)^2}{2g \times 778} = 8{\cdot}8 \text{ B.Th.U.}$$

The heat increase due to eddies and friction in the second stage

$$= 17{\cdot}3 + 8{\cdot}4 + 3{\cdot}4 + 8{\cdot}8 = 37{\cdot}9 \text{ B.Th.U}$$

Heat converted into work in second stage

$$= 135 - 37{\cdot}9 = 97{\cdot}1 \text{ B.Th.U.}$$

The heat available for conversion into work in second stage if adiabatic expansion had taken place = 147 B.Th.U.

Therefore efficiency of the second stage (nozzle and vanes)

$$= \frac{97{\cdot}1}{147} \times 100 = 66 \text{ per cent.}$$

The heat available for conversion into work if the expansion had been adiabatic is 1251 − 931 = 320 B.Th.U.

The combined efficiency

$$= \frac{118{\cdot}7 + 97{\cdot}1}{320} \times 100$$
$$= 67{\cdot}4 \text{ per cent.}$$

Velocity Diagram. Second Method.—Fig. 471 shows another method of drawing the velocity diagram for the first stage.

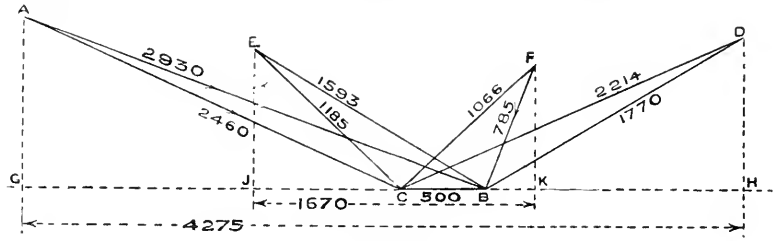

FIG. 471.

AB is the nozzle velocity ; AC the relative velocity ; CD the velocity leaving the first row of moving blades.

The total change of velocity parallel to the wheel in the first row of blades is GH = 4275 ft. per second.

The total change of velocity parallel to the wheel in the second row is JK = 1670 ft. per second.

The total change of velocity effected in this stage is 5945 ft. per second.

The work done per pound of steam is the change of momentum multiplied by the velocity of the wheel, or

$$\frac{5945}{g} \times \frac{500}{778} = 118{\cdot}7 \text{ B.Th.U.}$$

The energy available = 186.

Therefore efficiency of wheel and nozzle

$$= \frac{118{\cdot}7}{186} \times 100 = 63{\cdot}8 \text{ per cent.}$$

which is the same result as previously obtained.

This method may be similarly used for the second stage.

Condensation in the Turbine.—During the passage of the steam through the turbine the temperature of the steam falls from the high-pressure to the low-pressure end of the turbine, and so long as the load is constant this range of temperature is constant. The walls of the stator and rotor portions of the turbine take up more or less the temperature of the steam in immediate contact with them, and condensation due to flow of heat from the steam to the surrounding walls is reduced to a minimum. Hence that most serious cause of loss in the reciprocating engine, namely, condensation due to alternate heating and cooling of the cylinder walls during the admission and exhaust strokes, is absent in the steam turbine.

There is a tendency to flow of heat by conduction from the hotter end of the turbine to the cooler end, tending to produce a small condensation effect at the hot end, and a drying effect at the exhaust end of the turbine.

Friction.—The friction in the steam turbine is not that of rubbing metal surfaces, as in the reciprocating engine, the only rubbing surfaces being the main bearings. In the turbine the friction is rather that between the rotating parts and the steam, the friction due to conflicting steam currents in their passage through the turbine, and the friction

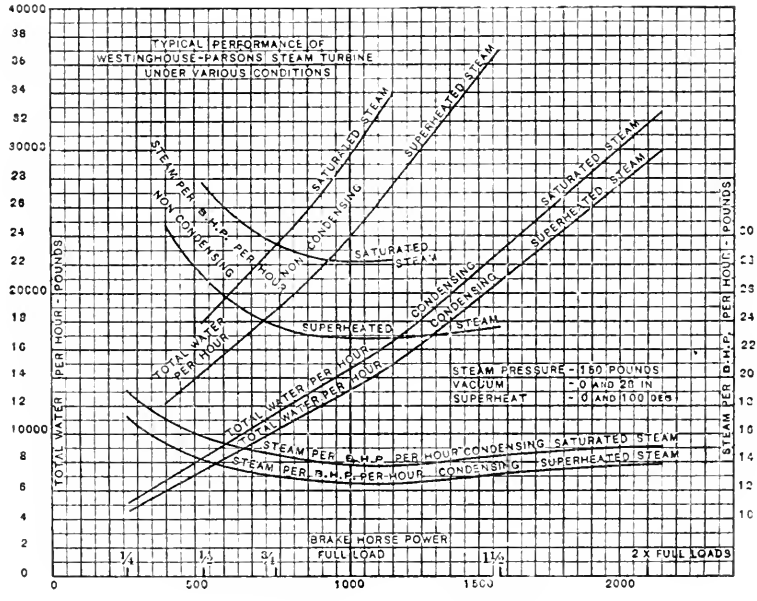

Turbine Steam-consumption Curves.

FIG. 472.

caused by the presence of water in the steam, which, when the proportion of water is large, may become very great.

The presence of water in the steam from an ordinary steam-boiler is unavoidable, and the steam delivered (not passing through a superheater) will contain at least from 2 to 5 per cent. of moisture. But in addition to its initial wetness, the steam will develop a degree of wetness due to the heat absorbed in giving velocity to its mass, the extent of the wetness being exactly the same as would result from work done during adiabatic expansion of the steam behind a piston in a reciprocating engine.

Superheating the steam produces a marked improvement in the steam turbine, the steam-consumption being reduced about 1 per

cent. for every 10° Fahr. of superheat, and the increased efficiency is attributed chiefly to reduced loss by friction.

On the other hand, if the turbine is supplied with excessively wet steam, as from a priming boiler, the effect upon the turbine is to slow it down, owing to the excessive friction set up between the water and the rotating parts.

It is true that the friction is transformed into heat, but little useful effect is obtained from the heat so generated.

Vacuum.—There is a theoretical advantage in all heat engines in reducing the lower limit of temperature to the lowest possible point, but the advantage is more fully realized in the turbine than in the reciprocating engine. In the reciprocating engine there is, first, the practical difficulty that the gain obtained by reducing the condenser pressure and temperature is to some extent neutralized by the increased cylinder condensation, due to the reduced temperature of the exhaust; secondly, owing to the greatly increased volume of the steam at the lower pressure, it is not practicable to make the low-pressure cylinder large enough to take full advantage of the expanding steam; and, thirdly, there is generally a considerable difference between the vacuum in the condenser and the mean vacuum at the back of the low-pressure piston, especially at full power.

In the case of the turbine, condensation effects of the kind above mentioned are absent, and the steam may be expanded down to the pressure in the condenser; it is therefore possible to take full advantage of the lowest limits of temperature and pressure in the condenser. Each additional inch of vacuum between 23 ins. and 28 ins. appears to reduce the steam consumption of the turbine on an average from 3 to 4 per cent.

It is possible to avoid air leaks to the condenser more easily in the turbine than in the reciprocating engine, because the only glands to leak air are those where the main shaft passes out through the turbine-case, and these glands are steam-packed, which is a very effectual means of excluding air.

In order to secure and maintain a high degree of vacuum, it is, of course, necessary to have ample condenser cooling surface, a large supply of circulating water, and efficient air-pumps, as well as short passages and ample dimensions of the exhaust pipe. In the most recent condensers for turbines, from 10 to 12 lbs. of steam are condensed per hour per square foot of cooling surface, with a vacuum of $27\frac{1}{2}$ to 28 ins. at full load.

The amount of circulating water required is about fifty times the weight of steam, as against thirty times the weight of steam for ordinary condenser practice. For this additional cooling water an addition of $\frac{3}{4}$ in. to 1 in. of vacuum is obtained, or a gain of from 3 to 4 per cent.

For the purpose of more thoroughly extracting the air, a "vacuum augmenter" (Fig. 473) has recently been introduced by Messrs. Parsons. From the bottom of the condenser a pipe is led away to an auxiliary condenser, containing about $\frac{1}{27}$ the cooling surface of the main condenser, and in a contracted portion of this pipe a small

steam jet is placed, which acts as an ejector, and extracts nearly all the residual air and vapour from the condenser and delivers it to the air-pumps. A water seal is provided, which prevents the air and vapour returning to the condenser. The steam used by the auxiliary jet is said to be about 1½ per cent. of the full-load steam consumption.[1] The air and vapour in the augmenter condenser being denser than that in the main condenser, the air-pump need not be so large as would otherwise be necessary. In this connection it may be noted that the

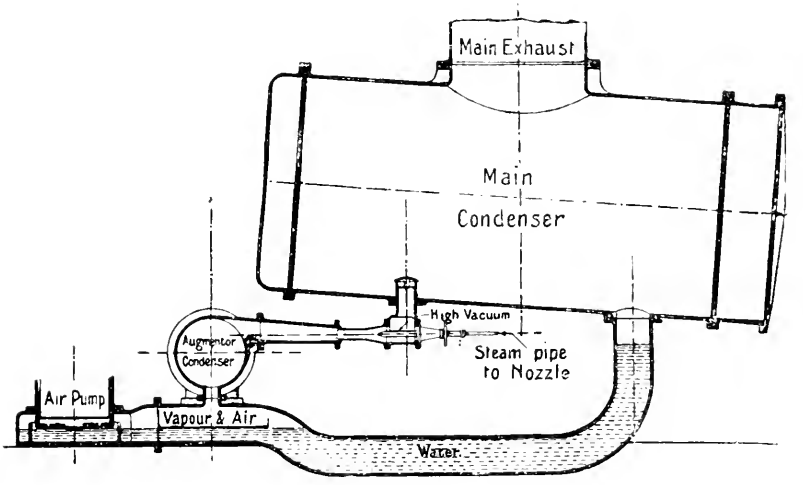

FIG. 473.

volume of a given weight of air at 1 lb. pressure absolute is double that at 2 lbs. pressure absolute.

Recent Development in Surface Condenser Practice.—As soon as it was fully realized how important was the influence of improved vacuum in steam turbine practice, much more attention was given to the study of the design of condensers, with a view to improving their efficiency.

If the steam exhausting into a surface condenser consisted of pure steam only, there would be no need of an air pump, but in practice more or less air is always present in the exhaust steam, partly due to air dissolved in the feed water, and partly to leakage of air into that part of the plant which is below atmospheric pressure.

The weight of air passing into the condenser with the steam is more or less constant under constant conditions, but in surface condensers the ratio of air to steam in the condenser during the process of condensation varies greatly between the point of entry to the condenser and the point of leaving it to enter the air-pump barrel.

[1] See a paper by Hon. C. A. Parsons, G. Stoney, and C. P. Martin, Inst. of Elect. Engineers, May 12, 1904.

At the exhaust steam inlet the ratio of air to steam is very small, but this ratio increases rapidly as the steam condenses, until finally the proportion of air by weight is considerable.

Partial Pressures.—The pressure in the condenser indicated by the vacuum gauge is made up of the sum of the "partial" pressures of the air and the vapour present in the condenser. The "partial" pressure of the air, and the "partial" pressure of the vapour depend upon quite independent laws, and are determined from the known data, always remembering that "the pressure of the mixture of a gas and a vapour is equal to the sum of the pressures which each would possess if it occupied the same space alone."

The pressure due to water vapour in an enclosed space at a given temperature is obtained by reference to the Steam Tables.

The pressure is expressed in inches of mercury.

Note: 1 inch of mercury = 0·491 lb. per square inch pressure.

The relation of pressure, volume and temperature of air is expressed (see p. 8) by the formula

$$PV = RT$$

where P = pressure per square foot; V = volume per lb. of air in cubic feet; T = absolute temperature Fahrenheit; and R = a constant = 53·2

$$\text{or } P = \frac{RT}{V}$$

Example 1.—We have in the lower portion of a condenser a mixture of air and steam at a temperature of 105° F. and a pressure of 26 inches by the vacuum gauge, or 4 inches of mercury: find the "partial" pressures of the air and steam present in the condenser.

From the Steam Tables (Table IV.) the pressure of saturated steam at 105° F. is 1·098 lbs. per square inch absolute, and this is the partial pressure due to the steam. But the total pressure of steam and air is 4 inches of mercury, that is $4 \times 0{\cdot}491 = 1{\cdot}964$ lbs. pressure per square inch absolute, therefore the partial pressure of the air = 1·964 − 1·098 = 0·866 lb. per square inch. The partial pressure of the steam is therefore 1·098 lbs. per square inch, and the partial pressure of the air is 0·866 lb. per square inch.

Example 2.—To find from the data given in Example 1 the volume in cubic feet per lb. of air present in the condenser when the pressure of the air is 0·866 lb. per square inch, and its temperature is 105° F.

$$PV = 53{\cdot}2\ T$$

$$V = \frac{53{\cdot}2 \times (461 + 105)}{0{\cdot}866 \times 144}$$

$$= 240 \text{ cubic feet per lb.}$$

Improvements.—Among the various improvements that have taken place in the design of condensers are the following:—

(1) Arrangements for the easiest possible direct passage of the exhaust steam to the condenser tube surface.

(2) The shaping of the condenser so as to present a gradually reducing sectional area from the exhaust inlet to the air-pump suction.

(3) The provision of tubeless spaces at points in the path of flow, where a change or reversal of direction of flow occurs.

(4) The provision of a cooling chamber in the base of the condenser to regulate the temperature of the gases passing to the air pump.

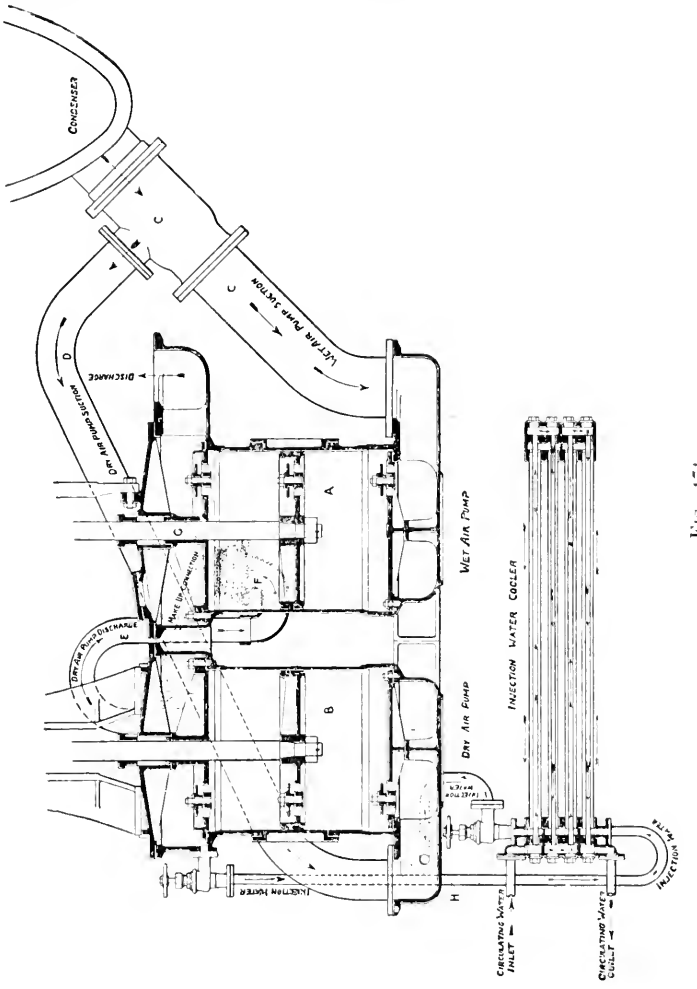

FIG. 474.

The efficiency of the air pump increases as the density of the gases admitted to it increases, and this density depends upon the cooling efficiency of the condenser. It is also important that the water of condensation supplied to the air pump should be reduced to a temperature below that of its boiling-point under the conditions of the vacuum attained in the air-pump barrel, otherwise on the vacuum

stroke of the air-pump piston the water would boil and the barrel be filled with vapour, when the pump would cease to act any longer as an air pump.

It must be further remembered that the efficiency of the plant as a whole requires that the heat in the condensed steam should be conserved in every possible way in order to return it as boiler feed at the highest possible temperature.

In order to deal with the opposing principles of a hot boiler feed on the one hand, and a high air-pump efficiency on the other, separate air pumps are sometimes fitted, one dealing with the air and vapour at a low temperature, called the "dry-air pump," and the other dealing with the water at a higher temperature called the "wet-air pump."

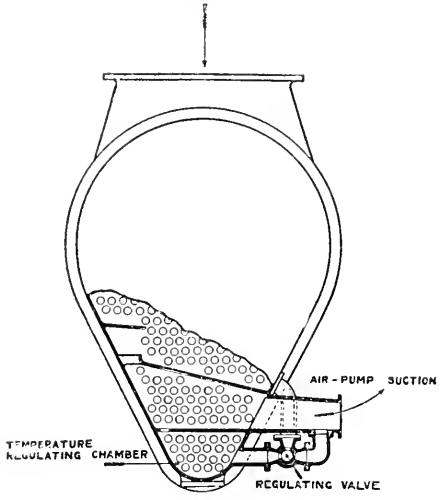

FIG. 475.

To the dry-air pump a cold injection is applied, thereby increasing the density of the air and enabling the pump to withdraw a greater weight of air per stroke, or permitting a reduction of air pump dimensions.

Fig. 474 illustrates a dual air pump made by Messrs. G. & J. Weir, Ltd. A is the wet pump and B the dry pump. A single connection C is made to the condenser. A branch pipe D is led to the suction side of the dry pump, connection being made in such a manner that the water from the condenser to the suction will all pass direct to the wet pump by C_1. It will be seen that there is a separate suction to each pump, and that the dry pump discharges through the pipe E against the spring-loaded valve F into the wet pump at a point below its head or discharge valves. The dry pump is supplied with water for water sealing, cooling, and vapour condensing. This water passes from the hot well of the dry pump by the pipe H to a special cooler through which a supply of cold water continuously circulates.

Fig. 475 represents a section of the "Contraflo" condenser. This

condenser is fitted with a two-way cock and pipe at its base, by means of which the water of condensation can be passed direct to the air pump, or, where it is too hot to be effectively dealt with by the air pump, it can be by-passed through a cooler or water-pocket at the bottom of the condenser and afterwards admitted to the air pump.

Jet Condensers.—In the case of a jet condenser plant the work of the air pump is greatly increased over that of the air pump of the surface condenser, which has to deal only with the condensed steam and the air present chiefly due to leakage.

The air pump of the jet condenser has to handle, in addition to this, the whole body of condensing water together with the air liberated from that water.

In jet condensers the minimum condenser pressure is obtained under conditions which limit the supply of condensing water. The limiting point being when further increase in weight of condensing water, though reducing the pressure due to the steam, increases by a more than corresponding amount the pressure due to excess air brought in with the condensing water.

Vibration in the turbine is practically eliminated, as there are no unbalanced parts. This removes the necessity for massive and costly foundations.

The **even turning moment** on the spindle is a further important quality of the turbine.

Lubrication.—As there are no internal rubbing parts, no internal lubrication is required, hence the steam exhausted from the turbine to the condenser is entirely free from oil, and the feed water supplied to the boilers is pure distilled water.

Horse-power of Turbines.—It is not possible to directly measure the indicated horse-power of the turbine, but the brake horse-power or the electrical horse-power of a turbo-electric set may be measured directly. Correcting the electrical horse-power for the efficiency of the dynamo, we then have the brake horse-power of the turbine alone.

In reciprocating engines, the mean ratio of I.H.P. to B.H.P. is taken as 1 : 0·86. If, then, for the purpose of comparison, the B.H.P. of the turbine be divided by 0·86, we obtain what is called the "hypothetical equivalent indicated horse-power" of the turbine.

APPENDIX

I.

RIPPER'S MEAN-PRESSURE INDICATOR.

The object of the mean-pressure indicator here described (Fig. 476), is to obtain from pressure-gauges a continuous reading of the mean effective pressure in an engine cylinder.

The instrument consists of a valve-box containing two valves, and by the automatic action of the valves, the driving or impelling steam is made to act continuously on one gauge, called the forward-pressure gauge; while the back-pressure steam acts continuously upon another gauge, called the back-pressure gauge. The difference between the readings of the two gauges gives, for ordinary cases, a close approximation to the effective pressure acting on the piston as given by an ordinary indicator.

The action of the valves is as follows:—One of the valves, B, is a ball valve, and the other, E, is a double-seated valve. Suppose, in a vertical engine, the driving-steam is on the upper side of the engine piston, pressing it downwards. Then the driving-steam enters also the upper part of the instrument at H, and presses down both the little valves upon their respective seats. This action puts the driving-steam into communication with the forward-pressure gauge; and puts the back-pressure steam, which is below the valves, into communication with the back-pressure gauge, owing to the double-beat valve E being now open at the bottom side of the valve.

On the return stroke of the piston, the driving-steam enters the instrument at C, and the valves B and E of the instrument are automatically reversed, and again the driving-pressure steam acts upon the forward-pressure gauge, and the back-pressure steam upon the back-pressure gauge. In this way there is a continuous reading of the forward and back pressures on the respective gauges.

There is a cock, A (and D), at the instrument end of the gauge-syphon for rough adjustment, and a cock F (and G) close to the gauge for fine adjustment. By the use of two cocks, the gauge-finger is maintained steady, and the gauge-pipe is kept full of water.

The mean-pressure obtained from the gauges is the mean-pressure on a time base. This differs somewhat from the mean-pressure on a distance-base, as given by the ordinary indicator, because the motion of the piston is harmonic, and not uniform throughout the stroke.

In many cases the difference between the two kinds of mean-pressures is very small. In some cases, however, where there is a large expansion in one cylinder, the difference is greater; also in the case where the back pressure at compression is greater than the forward pressure; the valves of the instrument reverse too early. But for all cases, in any given engine, there is a definite ratio between the reading of the gauges and the mean-pressure by an ordinary indicator which can be determined once for all by actual trial, or by measurement from the diagrams; and in practice the gauges are in the first instance standardized against a good standard indicator of the ordinary type, at light medium and heavy loads, and the gauges graduated accordingly.

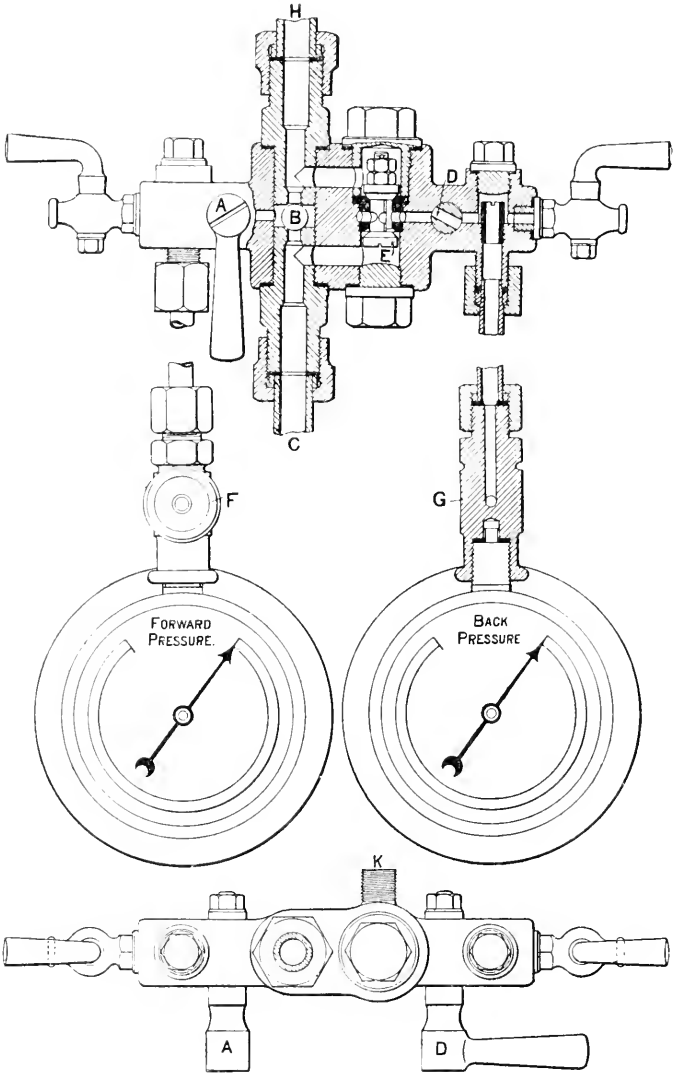

FIG. 476.

II.

SATURATED-STEAM TABLES.

Absolute pressure, pounds per sq. inch.	Temperature of boiling-point, degrees F.	Heat of the liquid from 32° F.	Total heat from 32° F.	Latent heat.	Heat to overcome internal resistance.	Heat to overcome external resistance.	Thermal units actually contained in the steam above 32° F.	Weight of a cub. ft. in pounds.	Cub. ft. per pound.
p	t	h	H	L	ρ	E	$I = H - E$	w	V
1·0	102·0	70·0	1113·1	1043·0	981·1	61·9	1051·2	0·00299	334·6
2·0	126·3	94·4	1120·5	1026·1	961·9	64·2	1056·3	0·00576	173·6
3·0	141·6	109·8	1125·1	1015·3	949·5	65·8	1059·3	0·00844	118·4
4·0	153·1	121·4	1128·6	1007·2	940·4	66·8	1061·8	0·01107	90·31
5·0	162·3	130·7	1131·5	1000·8	933·1	67·7	1063·8	0·01366	73·22
6·0	170·1	138·6	1133·8	995·2	926·7	68·5	1065·3	0·01622	61·67
7·0	176·9	145·4	1135·9	990·5	921·4	69·1	1066·8	0·01874	53·37
8·0	182·9	151·5	1137·7	986·2	916·5	69·7	1068·0	0·02112	47·07
9·0	188·3	156·9	1139·4	982·5	912·4	70·1	1069·3	0·02374	42·13
10·0	193·2	161·9	1140·9	979·0	908·4	70·6	1070·3	0·02621	38·16
11·0	197·8	166·5	1142·3	975·8	904·8	71·0	1071·3	0·02866	34·88
12·0	202·0	170·7	1143·6	972·9	901·5	71·4	1072·2	0·03111	32·14
13·0	205·9	174·6	1144·7	970·1	898·4	71·7	1073·0	0·03355	29·82
14·0	209·6	178·3	1145·8	967·5	895·5	72·0	1073·8	0·03600	27·79
14·7	212·0	180·7	1146·6	965·8	893·5	72·3	1074·2	0·03758	26·64
15·0	213·0	181·8	1146·9	965·1	892·6	72·5	1074·4	0·03826	26·15
16·0	216·3	185·1	1147·9	962·8	890·0	72·8	1075·1	0·04067	24·59
17·0	219·4	188·3	1148·9	960·6	887·6	73·0	1075·9	0·04307	23·22
18·0	222·4	191·3	1149·8	958·5	885·3	73·2	1076·6	0·04547	22·00
19·0	225·2	194·1	1150·7	956·6	883·2	73·4	1077·3	0·04786	20·90
20·0	227·9	196·9	1151·5	954·6	881·0	73·6	1077·9	0·05023	19·91
21·0	230·5	199·5	1152·3	952·8	879·0	73·8	1078·5	0·05259	19·01
22·0	233·1	202·0	1153·0	951·0	877·0	74·0	1079·0	0·05495	18·20
23·0	235·5	204·5	1153·7	949·2	875·0	74·2	1079·5	0·05731	17·45
24·0	237·8	206·8	1154·4	947·6	873·2	74·4	1080·0	0·05966	16·76
25·0	240·0	209·1	1155·1	946·0	871·5	74·5	1080·6	0·06199	16·13
26·0	242·2	211·2	1155·8	944·6	869·9	74·7	1081·1	0·06432	15·55
27·0	244·3	213·4	1156·5	943·1	868·2	74·9	1081·6	0·06666	15·00

[1] The above steam data are for the most part taken from Prof. Peabody's valuable "Saturated Steam Tables," by kind permission of the author and publishers (Messrs. John Wiley and Sons, New York), and the same values are used throughout the text.

Absolute pressure, pounds per sq. inch.	Temperature of boiling-point, degrees F.	Heat of the liquid from 32° F.	Total heat from 32° F.	Latent heat.	Heat to overcome internal resistance.	Heat to overcome external resistance.	Thermal units actually contained in the steam above 32° F.	Weight of a cub. ft. in pounds.	Cub. ft. per pound.
p	t	h	H	L	ρ	E	$I = H - E$	w	V
28·0	246·4	215·4	1157·1	941·7	866·7	75·0	1082·1	0·06899	14·49
29·0	248·3	217·4	1157·7	940·3	865·1	75·2	1082·5	0·07130	14·03
30·0	250·3	219·4	1158·3	938·9	863·6	75·3	1083·0	0·07360	13·59
31·0	252·1	221·3	1158·8	937·5	862·0	75·5	1083·3	0·07590	13·18
32·0	254·0	223·1	1159·4	936·3	860·7	75·6	1083·8	0·07821	12·78
33·0	255·8	224·9	1159·9	935·0	859·2	75·8	1084·1	0·08051	12·41
34·0	257·5	226·7	1160·4	933·7	857·8	75·9	1084·5	0·08280	12·07
35·0	259·2	228·4	1161·0	932·6	856·6	76·0	1085·0	0·08508	11·75
40·0	267·1	236·4	1163·4	927·0	850·3	76·7	1086·7	0·09644	10·37
45·0	274·3	243·6	1165·6	922·0	844·8	77·2	1088·4	0·1077	9·287
50·0	280·8	250·2	1167·6	917·4	839·7	77·7	1089·9	0·1188	8·414
55·0	286·9	256·3	1169·4	913·1	834·9	78·2	1091·2	0·1299	7·696
60·0	292·5	261·9	1171·2	909·3	830·7	78·6	1092·6	0·1409	7·096
65·0	297·8	267·2	1172·7	905·5	826·5	79·0	1093·7	0·1519	6·583
70·0	302·7	272·2	1174·3	902·1	822·7	79·4	1094·9	0·1628	6·144
75·0	307·4	276·9	1175·7	898·8	819·1	79·7	1096·0	0·1736	5·762
80·0	311·8	281·4	1177·0	895·6	815·5	80·1	1096·9	0·1843	5·425
85·0	316·0	285·8	1178·3	892·5	812·1	80·4	1097·9	0·1951	5·125
90·0	320·0	290·0	1179·6	889·6	808·9	80·7	1098·9	0·2058	4·858
95·0	323·9	294·0	1180·7	886·7	805·8	80·9	1099·8	0·2165	4·619
100·0	327·6	297·9	1181·9	884·0	802·8	81·2	1100·7	0·2271	4·403
105·0	331·1	301·6	1182·9	881·3	799·9	81·4	1101·5	0·2378	4·206
110·0	334·6	305·2	1184·0	878·8	797·1	81·7	1102·3	0·2484	4·026
115·0	337·9	308·7	1185·0	876·3	794·4	81·9	1103·1	0·2589	3·862
120·0	341·0	312·0	1186·0	874·0	791·9	82·1	1103·9	0·2695	3·711
125·0	344·1	315·2	1186·9	871·7	789·4	82·3	1104·6	0·2800	3·572
130·0	347·1	318·4	1187·8	869·4	786·9	82·5	1105·3	0·2904	3·444
135·0	350·0	321·4	1188·7	867·3	784·7	82·6	1106·1	0·3009	3·323
140·0	352·8	324·4	1189·5	865·1	782·3	82·8	1106·7	0·3113	3·212
145·0	355·6	327·2	1190·4	863·2	780·2	83·0	1107·4	0·3218	3·107
150·0	358·3	330·0	1191·2	861·2	778·1	83·1	1108·1	0·3321	3·011
155·0	360·9	332·7	1192·0	859·3	776·0	83·3	1108·7	0·3426	2·919
160·0	363·4	335·4	1192·8	857·4	774·0	83·4	1109·4	0·3530	2·833
165·0	365·9	338·0	1193·6	855·6	772·0	83·6	1110·0	0·3635	2·751
170·0	368·3	340·5	1194·3	853·8	770·1	83·7	1110·6	0·3737	2·676
175·0	370·6	343·0	1195·0	852·0	768·2	83·8	1111·2	0·3841	2·603
180·0	373·0	345·4	1195·7	850·3	766·4	83·9	1111·8	0·3945	2·535
185·0	375·23	347·8	1196·4	848·6	764·6	84·0	1112·4	0·4049	2·470
190·0	377·4	350·1	1197·1	847·0	762·9	84·1	1113·0	0·4153	2·408
195·0	379·6	352·4	1197·7	845·3	761·1	84·2	1113·5	0·4257	2·349
200·0	381·7	354·6	1198·4	843·8	759·5	84·3	1114·1	0·4359	2·294
250·0	401·0	374·7	1204·2	829·5	744·5	85·0	1119·2	0·5393	1·854
300·0	417·4	391·9	1209·3	817·4	732·0	85·4	1123·9	0·6440	1·554
400·0	444·9	419·8	1217·7	797·9	712·3	86·2	1131·5	0·8572	1·167

III.

SATURATED-STEAM TABLES.

From Prof. Peabody's Steam Tables (New Edition).

Temperature of boiling-point, degrees F.	Absolute pressure, pounds per sq. inch.	Heat of the liquid from 32° F.	Total heat from 32° F.	Latent heat.	Heat to overcome internal resistance.	Heat to overcome external resistance.	Weight of a cub. ft. in pounds.	Cub. ft. per pound.
t	p	h	H	L	ρ	E	w	V
32	0·0886	0·0	1071·7	1071·7	1017·5	54·2	0·000302	3308
40	0·1217	8·1	1075·7	1067·6	1012·5	55·1	0 0004409	2446
50	0·1780	18·1	1080·4	1062·3	1006·2	56·1	0·000587	1703
60	0·2561	28·1	1085·1	1057·0	999·8	57·2	0·000828	1207
70	0·3627	38·1	1089·9	1051·8	993·6	58·2	0·001152	868
80	0·5056	48·1	1094·6	1046·5	987·2	59·3	0·001577	634
90	0·6960	58·1	1099·3	1041·2	980·9	60·3	0·002131	469
100	0·9461	68·0	1103 7	1035·7	974·4	61·3	0·002851	350 8
110	1·271	78·0	1108·1	1030·1	967·7	62·4	0·003771	265·2
120	1·689	88·0	1112·4	1024·4	961·0	63·4	0·004926	203 0
130	2·220	98·0	1116·7	1018·7	954·2	64·5	0·00637	157·1
140	2·885	108·0	1121·1	1013·1	947·5	65·6	0 00814	122·8
150	3·715	118·0	1125·2	1007·2	940·6	66·6	0·01032	96·9
160	4·738	128·0	1129·4	1001·4	933·7	67·7	0·01296	77·2
170	5·990	138·0	1133·5	995·5	926·8	68·7	0·01613	62·0
180	7·510	148·0	1137·5	989·5	919·8	69·7	0·01993	50·2
190	9·339	158·1	1141·5	983·4	912·7	70·7	0·02444	40·92
200	11·528	168·2	1145·4	977·2	905·5	71·7	0 02974	33·62
210	14·125	178·3	1149·2	970·9	898·3	72·6	0 03597	27 80
220	17·188	188·4	1153·0	964·6	891·0	73·6	0·04321	23·14
230	20·78	198·5	1156·6	958·1	883·6	74·5	0·0516	19 37
240	24·97	208·6	1160 0	951·4	876·0	75·4	0·0613	16·31
250	29 82	218·8	1163·5	944·7	868·5	76·2	0 0724	13·82
260	35·42	229·0	1166·8	937·8	860·7	77·1	0·0851	11·75
270	41·84	239·1	1169·8	930·7	852·8	77·9	0·0995	10·05
280	49·19	249·4	1173·0	923·6	844·9	78·7	0·1158	8·639
290	57·53	259·6	1175·9	916·3	836·9	79·4	0 1341	7·454
300	66·98	269·8	1178·7	908·9	828·8	80·1	0·1547	6·462
310	77·63	280·1	1181·4	901·3	820·5	80·8	0·1779	5·622
320	89·59	290·4	1184·1	893·7	812·3	81·4	0·2038	4·907
330	102·98	300·6	1186 5	885·9	803·8	82·1	0·2319	4·312
340	117·91	310·9	1188·9	878·0	795·3	82·7	0·2642	3·784
350	134·52	321·3	1191·3	870·0	786 8	83·2	0·2992	3·342
360	152·89	331·6	1193·4	861·8	778·1	83·7	0·3378	2·960
370	173·17	341·9	1195·4	853·5	769 3	84·2	0·3808	2·626
380	195·52	352·3	1197·4	845·1	760·5	84·6	0·4275	2·339
390	220·05	362·7	1199·3	836·6	751·6	85 0	0·4789	2·088
400	246·9	373·1	1201·0	827·9	742·6	85·3	0·535	1·868

IV.

CONDENSER TEMPERATURES AND PRESSURES.

Temperature degrees F.	Pressure, pounds per sq. inch.	Temperature degrees F.	Pressure, pounds per sq. inch.	Temperature degrees F.	Pressure, pounds per sq. inch.	Temperature degrees F.	Pressure, pounds per sq. inch.	Temperature degrees F.	Pressure, pounds per sq. inch.
t	p	t	p	t	p	t	p	t	p
60	0·256								
61	0·265	73	0·401	85	0·594	97	0·864	109	1·235
62	0·275	74	0·415	86	0·613	98	0·891	110	1·271
63	0·285	75	0·429	87	0·633	99	0·918	111	1·308
64	0·295	76	0·443	88	0·653	100	0·946	112	1·347
65	0·305	77	0·458	89	0·674	101	0·975	113	1·386
66	0·316	78	0·474	90	0·696	102	1·005	114	1·426
67	0·327	79	0·489	91	0·718	103	1·035	115	1·467
68	0·339	80	0·506	92	0·741	104	1·066	116	1·509
69	0·350	81	0·522	93	0·764	105	1·098	117	1·552
70	0·363	82	0·539	94	0·788	106	1·131	118	1·597
71	0·375	83	0·557	95	0·813	107	1·165	119	1·642
72	0·388	84	0·575	96	0·838	108	1·200	120	1·689

V.

TABLE OF MEAN-PRESSURE RATIOS.

The mean pressure p_m is obtained for any given number of expansions by multiplying the initial absolute pressure by the factor given. Thus, for adiabatic expansion with a cut-off at $\frac{1}{5}$, the initial pressure = 100 lbs. absolute—

$$p_m = p_1 \times \text{factor for five expansions} = 100 \times 0{\cdot}496$$
$$= 49{\cdot}6 \text{ lbs.}$$

$R = \frac{V_2}{V_1}$ ratio of expansion.	$\frac{p_m}{p_1} = \frac{1 + \text{hyp. log } r}{r}$ hyperbolic curve.	$\frac{p_m}{p_1} = 17r^{-1} - 16r^{-\frac{17}{16}}$ saturation curve.	$\frac{p_m}{p_1} = 10r^{-1} - 9r^{-\frac{10}{9}}$ adiabatic curve.
1·0	1·00	1·06	1·00
1·5	0·937	0·934	0·931
2·0	0·847	0·840	0·834
2·5	0·766	0·756	0·748
3·0	0·700	0·688	0·678
3·5	0·644	0·631	0·620
4·0	0·597	0·583	0·571
4·5	0·556	0·542	0·530
5·0	0·522	0·506	0·496
5·5	0·492	0·477	0·464
6·0	0·465	0·450	0·438
7·0	0·421	0·405	0·393
8·0	0·385	0·370	0·357
9·0	0·355	0·340	0·328
10·0	0·330	0·314	0·303
11·0	0·309	0·294	0·283
12·0	0·290	0·275	0·264
13·0	0·274	0·259	0·248
14·0	0·260	0·245	0·234
15·0	0·247	0·232	0·221
16·0	0·236	0·221	0·211
17·0	0·226	0·211	0·201
18·0	0·216	0·202	0·192
19·0	0·208	0·193	0·183
20·0	0·200	0·186	0·177
21·0	0·192	0·178	0·169
22·0	0·186	0·172	0·163
23·0	0·180	0·167	0·158
24·0	0·174	0·160	0·151
25·0	0·169	0·155	0·146

VI.

TABLE OF ENTROPY.

Temperature Fahrenheit. $t.$	Specific heat of water. $c.$	Entropy of 1 lb. of water from 32°. ϕ_ω	Entropy of 1 lb. of steam. $\phi_s = \frac{L}{T}$	Entropy of 1 lb of steam from 32° F. $\phi = \phi_\omega + \phi$	$\frac{d\phi}{dt}$
32	1		2·2189	2·2189	
50	1	0 0359	2·1163	2·1522	0·00370
60	1	0·0553	2·0621	2·1174	0·00348
70	1·001	0·0744	2·0100	2 0844	0·00330
80	1·001	0·0931	1·9598	2·0529	0 00315
90	1·002	0·1115	1·9115	2·0230	0·00299
100	1·002	0·1296	1·8649	1·9945	0·00285
110	1·003	0·1473	1·8200	1 9673	0·00272
120	1·004	0·1648	1·7766	1·9414	0·00259
130	1·004	0·1819	1·7346	1·9165	0·00249
110	1·005	0·1988	1·6940	1·8928	0·00237
150	1·006	0·2154	1·6547	1·8701	0·00227
160	1·007	0·2318	1·6167	1·8485	0·00216
170	1·008	0·2479	1·5799	1·8278	0·00207
180	1·009	0·2638	1·5442	1·8080	0·00198
190	1·010	0·2795	1·5096	1·7891	0·00189
200	1·011	0·2949	1·4760	1·7709	0·00182
250	1·017	0·3690	1·3220	1·6910	0·00160
300	1·026	0·4385	1·1880	1·6265	0·00129
350	1·034	0·5042	1·0638	1·5740	0·00105
400	1·044	0·5665	0·9649	1·5314	0·00085

QUESTIONS WITH SOLUTIONS

(*Prepared for the Author by* Mr. J. W. Kershaw, M.Sc. B.Eng.)

I. THERMODYNAMICS OF GASES.

1. What is the law connecting the pressure, volume, and absolute temperature of 1 lb. of air? 1 lb. of air at 2 atmospheres pressure and 20° C.: what is its volume?

It receives heat energy equivalent to 1000 foot-lbs., its volume remaining constant: find its new pressure and temperature. The specific heat of air at constant pressure is 0·238. (Bd. of Ed., Stage III., 1900.)

Answer.—The law connecting the pressure, volume, and absolute temperature is $PV = RT$; $R = 95{\cdot}83$ if T is in Centigrade degrees.

Let V_1 = the new volume;

$$\text{then } 2 \times 14{\cdot}7 \times 144 \times V_1 = 95{\cdot}83 \times (273{\cdot}7 + 20)$$

$$V_1 = \frac{95{\cdot}83 \times 293{\cdot}7}{2 \times 14{\cdot}7 \times 144} = 6{\cdot}648 \text{ cub. ft.}$$

Heat added = kt, where t = the rise in temperature

$$\therefore 1000 = (K - R)t$$

$$t = \frac{1000}{0{\cdot}238 \times 1393 - 95{\cdot}83} = 4{\cdot}3° \text{ C.}$$

and the new temperature is therefore 24·3° C.

To find the new pressure—

$$PV = RT$$

$$\therefore P = \frac{95{\cdot}83 \times (273{\cdot}7 + 24{\cdot}3)}{6{\cdot}648 \times 144} = 29{\cdot}89 \text{ lbs. per square inch}$$

If we add a small amount of heat δH to a gas—

Heat added = increase of internal energy + work done

$$\delta H = k\delta T + p\delta v$$

$$\text{or } dH = kdT + pdv$$

$$\text{But } \frac{PV}{R} = T \qquad \therefore \frac{d(PV)}{R} = dT$$

$$\text{Substituting, } dH = \frac{kd(PV)}{R} + pdv$$

$$\text{Integrating, heat added, } H = \frac{k}{R}(P_2V_2 - P_1V_1) + \text{work done}$$

$$R = K - k \text{ and } \frac{K}{k} = \gamma \qquad \therefore \frac{K - k}{k} = \gamma - 1 \qquad \therefore \frac{k}{R} = \frac{1}{\gamma - 1}$$

$$\therefore \text{heat added in any change} = \frac{1}{\gamma - 1}(P_2V_2 - P_1V_1) + \text{work done}$$

During isothermal expansion the internal energy is constaut.

$$\therefore \text{ heat added} = \text{work done}$$

During adiabatic expansion no heat is added or rejected ;

$$\therefore 0 = \text{increase of internal energy} + \text{work done}$$
$$\text{or work done} = -\text{increase of internal energy}$$

If expansion of a gas take place according to the law $PV^n = c$, the heat given during expansion may be written in the following form, instead of the above form :—

$$\text{The work done} = \frac{P_1V_1 - P_2V_2}{n-1} \text{ (see p. 13)}$$

therefore heat given may by written—

$$\frac{1}{\gamma - 1}(P_2V_2 - P_1V_1) + \frac{P_1V_1 - P_2V_2}{n-1} = \frac{\gamma(P_1V_1 - P_2V_2) + n(P_2V_2 - P_1V_1)}{(\gamma-1)(n-1)}$$
$$= \frac{(\gamma - n)}{\gamma - 1} \times \frac{(P_1V_1 - P_2V_2)}{n-1}$$
$$= \frac{\gamma - n}{\gamma - 1} \times \text{work done}$$

2. Ten cubic feet of air at 90 lbs. absolute pressure and at 65° F. are expanded to four times the original volume, the law for the expansion being $PV^{1\cdot25} =$ a constant. Given that the specific heat of air at constant volume = 130·3 foot-lbs. per pound, and at constant pressure = 183·4 foot-lbs. per pound, find (1) the temperature of the air at the end of the expansion ; (2) the work done in foot-lbs. ; (3) the amount of heat which must have been given by or been rejected to an external source during the cycle. (London B. Sc. Eng., 1904.)

Answer.—

$$\frac{T_1}{T_2} = \left(\frac{V_2}{V_1}\right)^{n-1}$$
$$\therefore T_2 = \frac{65 + 461}{4^{1\cdot25-1}} = \frac{526}{4^{\frac{1}{4}}} = \frac{526}{\sqrt{2}}$$
$$= 372° \text{ absolute or } -89° \text{ F.}$$
$$\text{Work done in foot-lbs.} = \frac{P_1V_1\left[1 - \left(\frac{V_1}{V_2}\right)^{1\cdot25-1}\right]}{1\cdot25 - 1} = \frac{90 \times 144 \times 10[1 - (\frac{1}{4})^{\frac{1}{4}}]}{\frac{1}{4}}$$
$$= 151{,}800 \text{ foot-lbs.}$$
$$\text{Heat rejected} = \frac{\gamma - n}{\gamma - 1} \times \text{work done} = \frac{1\cdot408 - 1\cdot25}{0\cdot408} \times 151{,}800$$
$$= 58{,}790 \text{ foot-lbs.}$$

3. One pound of air at 32° F. and at atmospheric pressure occupies 12·387 cub. ft. Find its pressure at 212° F. and compressed to 3 cub. ft.

Ans. 82·9 lbs. per square inch.

4. Draw diagrams illustrating the addition of heat to a gas—

(1) at constant volume ;
(2) at constant pressure ;
(3) with increase of both pressure and volume.

5. Find the work done during the *isothermal* expansion of 1 lb. of air from 100 lbs. per square inch to 20 lbs. per square inch, at a temperature of 100° F. Hyp. log 5 = 1·609. *Ans.* 48,021 foot-lbs.

6. Find the work done during the *adiabatic* expansion of 1 lb. of air from 100 lbs. per square inch to 20 lbs. per square inch. *Ans.* 27,487 foot-lbs.

7. Air is compressed in an air-compressor adiabatically. If the initial temperature is 60° F., find the final temperature. The final pressure is 6 atmospheres.

Ans. 408° F.

8. A quantity of air at 60° F. is compressed adiabatically to $\frac{1}{4}$ its volume, and is then cooled down to 60° F. at constant pressure. The compressed air is next used for doing work by expanding adiabatically to the initial pressure. Show that the ratio of the work done during expansion to that expended during compression = $(\frac{1}{4})^{\gamma-1}$. Prove the formula on which you rely. (Bd. of Ed., Hons., 1893.)

9. Find an expression for the work done by 5 cub. ft. of air, at a pressure of 50 lbs. per square inch, when expanding at a constant temperature of 110° F. into a volume of 8 cub. ft. State the amount of heat which must be supplied during expansion, and give reasons for your statement.

Given, hyp. log 2 = 0·69315
hyp. log 10 = 2·30259

(Bd. of Ed., Hons., 1892.) *Ans.* 21·7 B.T.U.

10. Find an expression for the efficiency when air at 60° F. is compressed to a pressure of 5 atmospheres, then cooled down under a constant pressure to 60° F., and afterwards used for doing work by expanding it back again to the pressure of the atmosphere. (Bd. of Ed., Hons., 1891.)

11. Calculate the work done in adiabatically compressing and delivering 3 cub. ft. of dry air from atmospheric pressure to a pressure of 75 lbs. per square inch above the atmosphere. The ratio of the specific heats is 1·408. You may neglect clearance effects, and take the pressure of the atmosphere at 15 lbs. per square inch. (Inst. C.E., Feb., 1902.) *Ans.* 15,210 foot-lbs.

12. Define the terms "adiabatic" expansion and "isothermal" expansion. In an air-compressor, 10 cub. ft. of air at a gauge pressure of 5 lbs. per square inch and a temperature of 60° F. is compressed adiabatically to a gauge-pressure of 105 lbs. per square inch. Find the volume and temperature at the end of the compression. If the compression was isothermal, find the volume at the end of compression; the atmospheric pressure may be taken as 15 lbs. per square inch. (Inst. C.E., 1905.)

Ans. Final temperature = 414·8° F.; final volume = 2·800 cub. ft.; if compression isothermal, final volume = 1·66 cub. ft.

13. Explain why it is not possible to convert the whole of a given quantity of heat into work. What is about the best possible efficiency of a steam-engine?

14. State Carnot's principle. Point out the chief conclusions of a practical kind which have been deduced from this statement. Give the reasoning on which you found a measure of the efficiency of a perfect heat-engine. (Bd. of Ed., Hons., 1894.)

15. State the two laws of thermo-dynamics, and explain what limitation the second places upon the first in its application to heat-engines. (Inst. C.E., Feb., 1898.)

16. Sketch the indicator diagram of an air-engine working with a Carnot cycle, and find formulæ for the heat expended, the work done, and the efficiency. (Inst. C.E., Oct., 1898.)

17. State the first law of thermo-dynamics, and give some account of any experiment with which you are acquainted by means of which its truth has been established. The consumption of coal in an engine is 2 lbs. per I.H.P. per hour, and each pound of coal may be taken as supplying 10,000 thermal units. Find what fraction of the heat is usefully employed. (Inst. C.E., Feb., 1899.)

Ans. 12·7 per cent.

18. Distinguish between the adiabatic and the isothermal expansion of a perfect gas as regards work done, heat supplied, and efficiency. Prove your expression for the work done during each. (Inst. C.E., Feb., 1898.)

19. Show by a sketch, in approximately correct relationship, the curves for the (*a*) isothermal, (*b*) adiabatic, (*c*) $PV^{1\cdot6}$ = constant, expansion of 1 lb. of air from a given initial pressure-volume and temperature to twice its initial volume. State broadly the difference (not numerically) in the variation in internal energy between each. (Inst. C.E., Oct., 1902.)

20. What is the law connecting pressure, volume, and temperature of 1 lb. of air, if at 1 atmosphere and 0° C. the volume is 12·39 cub. ft.? At $2\frac{1}{2}$ atmospheres and 130° C., what is its volume? It receives heat energy equivalent to 300,000 foot-lbs. at constant *volume*: what are its new pressure and temperature?

The specific heat of air at constant pressure is 0·238. (Bd. of Ed., Stage III., 1203.)

Ans. PV = 95·83T; V = 7·311 cub. ft.; 152·6 lbs. per square inch; T = 1403° C.

21. Fluid expands from a point on the diagram where p is represented by 1·5 inches, and v by 1 inch, to a place where v is 3·5 inches. According to each of the laws of expansion, pv constant, $pv^{1\cdot0346}$ constant, and $pv^{1\cdot13}$ constant, find the value of p at the end of the expansion in each case. (Bd. of Ed., Stage II., 1900.)

Ans. 0·428; 0·395; 0·364.

22. Prove that if 1 lb. of air expands adiabatically the index n in the expression PV^n = constant, is the ratio of the specific heat at constant pressure to the specific heat at constant volume.

One pound of air at 354° F. (178·9° C.) expands adiabatically to three times its original volume, and in the process falls in temperature to 60° F. (15·6° C.). The work done during the expansion is 38,410 ft.-lbs. Calculate the two specific heats. (London B.Sc. Eng., 1912.)

Answer.—When heat is added to a gas the heat added may either increase the energy in the gas or do work, or both processes may take place at the same time.

From the first Law of Thermo-dynamics—

$$dQ = dE + dW$$

where dQ is the heat added; dE is the increase of energy of the gas, and dW is the work done. If the quantities are expressed in heat units—

$$dW = \frac{P \cdot dV}{J}$$

where J is Joule's equivalent.

For a perfect gas the energy is a function of the temperature.

$$\therefore dE = k \cdot dT$$

where k is a specific heat.

For constant volume $dQ = k \cdot dT + 0$

$\therefore k$ is the specific heat at constant volume, generally written k_v, and is here assumed to be independent of the temperature.

$$\therefore dQ = k_v dT + \frac{P \cdot dV}{J} \quad \ldots\ldots\ldots \quad (1)$$

When the expansion of the gas is adiabatic there is neither gain nor loss of heat, and $dQ = 0$.

$$\therefore \frac{dT}{dV} = -\frac{P}{Jk_v} \quad \ldots\ldots\ldots\ldots \quad (2)$$

The characteristic equation for a perfect gas is—

$$PV = RT$$

where $R = (k_p - k_v)J$.

$$\text{Differentiating} \quad P + V\frac{dP}{dV} = (k_p - k_v)J\frac{dT}{dV} \quad \ldots\ldots\ldots \quad (3)$$

Substituting in equation (3) the value of $\frac{dT}{dV}$ obtained in equation (2)—

$$P + V\frac{dP}{dV} = -\frac{(k_p - k_v)P}{k_v}$$

$$P + V\frac{dP}{dV} = -\frac{k_p}{k_v}P - P$$

$$\text{Hence} \quad \frac{dP}{P} + \frac{k_p}{k_v}\frac{dV}{V} = 0$$

$$\text{Integrating,} \quad \log_e P + \frac{k_p}{k_v}\log_e V = C$$

$$\text{or } PV^{\frac{k_p}{k_v}} = C$$
$$PV^{\gamma} = C$$

$\frac{k_p}{k_v}$ is usually written γ and = 1·408 for air, the index γ being the ratio of the specific heats in adiabatic expansion.

In the numerical example, as the expansion is adiabatic there is no addition or loss of heat.

$$\therefore \text{work done} = \text{change of energy}$$
$$38410 \text{ ft.-lbs.} = k_v \times 774(354 - 60)$$
$$k_v = \frac{38410}{774 \times 294}$$
$$= 0{\cdot}168$$
$$\text{Also } \frac{T_1}{T_2} = \left(\frac{V_2}{V_1}\right)^{\gamma-1} \text{ (p. 21)}$$
$$\frac{460 + 354}{460 + 60} = (3)^{\gamma-1}$$

Taking logs; $\log 814 - \log 524 = (\gamma - 1) \log 3$

$$\text{and } \gamma = 1{\cdot}408 = \frac{k_p}{k_v}$$
$$\therefore k_p = 1{\cdot}408 \times 0{\cdot}168$$
$$= 0{\cdot}236$$

23. Obtain an expression for the work done when air expands isothermally. Air at a pressure p_1 flows isothermally and without friction through an orifice where the pressure is p_2; what is the relation between p_1 and p_2 for maximum discharge? (Sheff. Univ.)

Answer.—Work done = $\int p \, dV = p_1 v_1 \log_e \frac{p_1}{p_2}$ for isothermal expansion (p. 12).

Let V = velocity and A = area of nozzle.

$$\text{Weight discharged per second} = \frac{AV}{v_2} = \frac{Ap_2V}{p_1v_1} \quad \because v_2 = \frac{p_1v_1}{p_2}$$
$$\text{also } \frac{V^2}{2g} = p_1v_1 \log_e \frac{p_1}{p_2}$$
$$\therefore \text{weight discharged} = \frac{Ap_2}{p_1v_1}\sqrt{2gp_1v_1 \log_e \frac{p_1}{p_2}}$$
$$= \frac{Ap_2\sqrt{2g}}{\sqrt{p_1v_1}} \log_e \left(\frac{p_1}{p_2}\right)^{\frac{1}{2}}$$

This expression is a maximum when its differential = 0, that is, when $\log_e \frac{p_1}{p_2} = \frac{1}{2}$ or $\frac{p_2}{p_1} = 0{\cdot}606$.

24. Air enters a single stage compressor at 60° F. and at 15 lbs. pressure. Find the work required per cubic foot to compress it to 90 lbs. absolute pressure, assuming that the compression curve is of the form $PV^{1\cdot3}$ = constant. After compression the air is cooled to 60° F. and used in a motor. If the air expands to 15 lbs. pressure, find the work done per cubic foot by the air. (Neglect clearance.) (Sheffield University.) *Ans.* 4753 ft.-lbs.; 2656 ft.-lbs.

25. Five hundred cubic feet of air at 60 lbs. per square inch absolute enter an air motor per minute and expand to 15 lbs. per square inch absolute. Find the horse-power of the motor, assuming the law of expansion is $PV^{1\cdot3}$ = constant. If you use a formula, prove its correctness. What is the final temperature, if the initial temperature is 228° F.? (Sheffield University.)

Ans. Horse-power = 155·5; final temperature = 40° F.

26. Show that when air expands adiabatically the index γ in the law $PV^{\gamma} = C$ is the ratio $\frac{K_p}{K_v}$, assuming the specific heat to be constant.

27. Find an expression for the work done by an engine in compressing air from a pressure P_2 and volume V_2 to a pressure P_1 and volume V_1 and delivering it at P_1, assuming the compression curve may be represented by the law $PV^n =$ constant.

Find the horse-power required to deliver 600 cub. ft. of free air per minute at 60 lbs. per square inch absolute, the initial pressure being 15 lbs. per square inch absolute. Assume $PV^{1\cdot3} =$ constant. (Sheffield University.)

Ans. 64·1 H. P.

28. Find the heat changes per pound of air, and draw up a heat balance for a refrigerating machine using air as the working fluid under the following conditions :—

Admission pressure to compressor, 15 lbs. per square inch absolute ; temperature, 35° F.

Pressure at the end of compression, 75 lbs. per square inch absolute ; law of compression, $PV^{1\cdot25} = C$.

Temperature after passing through cooler = 65° F.

Pressure after expansion, in expansion cylinder, 15 lbs. per square inch absolute ; law of expansion, $PV^{1\cdot25} = C$.

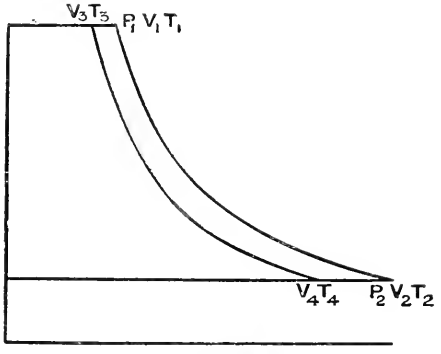

FIG. 476A.

Answer.—Let P_2, V_2 and T_2 be the original pressure, volume, and temperature.
P_1, V_1 and T_1 the pressure, volume, and temperature after compression.
P_1, V_3 and T_3 the pressure, volume, and temperature after cooling.
P_2, V_4, and T_4, the pressure, volume, and temperature after expansion.

$$P_2V_2 = RT_2$$
$$15 \times 144 \times V_2 = 53\cdot2\ (460 + 35)$$
$$V_2 = 12\cdot19 \text{ cub. ft.}$$

To find V_1, $$75 \times V_1^{1\cdot25} = 15(12\cdot19)^{1\cdot25}$$
$$V_1 = 3\cdot363 \text{ cub. ft.}$$

To find T_1, $$75 \times 144 \times 3\cdot363 = 53\cdot2\ T_1$$
$$T_1 = 682\cdot9$$

Loss of heat in cooler $= (682\cdot9 - (460 + 65)) \times 0\cdot2375$
$= 37\cdot50$ B.Th.U.

To find T_4, $$\frac{525}{T_4} = \left(\frac{75}{15}\right)^{\frac{1\cdot25-1}{1\cdot25}}$$
$$T_4 = 380\cdot6$$

Heat received from cooling chamber $= (495 - 380\cdot6) \times 0\cdot2375$
$= 27\cdot2$ B.Th.U.

Net work done = work done during compression − work done during expansion of air.

$$= \frac{1{\cdot}25 \times 144(75 \times 3{\cdot}363 - 15 \times 12{\cdot}19)}{(1{\cdot}25 - 1)778} - \frac{1{\cdot}25 \times 144(75V_3 - 15V_4)}{(1{\cdot}25 - 1)778}$$

$$= \frac{5 \times 144 \times 15}{778}(5 \times 3{\cdot}363 - 12{\cdot}19 - [5V_3 - V_4])$$

To find V_3, $\quad 75 \times 144 \times V_3 = 53{\cdot}2 \times 525$

$$V_3 = 2{\cdot}586 \text{ cub. ft.}$$

To find V_4, $\quad 15 \times 144 \times V_4 = 53{\cdot}2 \times 380{\cdot}6$

$$V_4 = 9{\cdot}374 \text{ cub. ft.}$$

$$\therefore \text{ net work done} = \frac{5 \times 144 \times 15}{778}(16{\cdot}815 - 12{\cdot}19 - 12{\cdot}93 + 9{\cdot}374)$$

$$= 14{\cdot}9 \text{ B.Th.U.}$$

Heat rejected by air during compression $= \frac{\gamma - n}{\gamma - 1}$ work done

$$= \frac{1{\cdot}408 - 1{\cdot}25}{1{\cdot}408 - 1}\left(\frac{75 \times 3{\cdot}363 - 15 \times 12{\cdot}19}{778(1{\cdot}25 - 1)}\right) \times 144$$

$$= 19{\cdot}9 \text{ B.Th.U.}$$

Heat received during expansion $= \frac{1{\cdot}408 - 1{\cdot}25}{1{\cdot}408 - 1}\left(\frac{75 \times 2{\cdot}586 - 15 \times 9{\cdot}374}{778(1{\cdot}25 - 1)}\right) \times 144$

$$= 15{\cdot}3 \text{ B.Th.U.}$$

HEAT BALANCE-SHEET.

	B.Th.U.		B.Th.U.
Heat rejected during compression	19·9	Heat abstracted from chamber	27·2
Heat rejected during cooling	37·5	Heat received during expansion	15·3
		Work done on air ...	14·9
	57·4		57·4

29. In a type of refrigerating machine using air, the air is drawn from the refrigerating chamber at a temperature 30° F. (atmospheric pressure 15 lbs. per square inch), compressed to 75 lbs. per square inch absolute and discharged to a cooler, where the temperature is reduced to 60° F. From this cooler it is taken and expanded to atmospheric pressure and then discharged into the chamber. The expansion and compression follow the law $pv^{1{\cdot}2}$ = constant. Draw up a heat balance for 1 lb. air, showing—

(1) Heat abstracted from the chamber.
(2) Heat rejected during compression.
(3) Heat rejected during cooling.
(4) Heat received during expansion.
(5) Heat representing work done.

Take $K_p = 0{\cdot}2375$, $\gamma = 1{\cdot}4$. (S.U., Hons., 1913.)

Answer.— HEAT BALANCE.

	B.Th.U.		B.Th.U.
Heat rejected during compression	25·54	Heat abstracted from chamber	21·92
Heat rejected during cooling	28·66	Heat received during expansion	20·73
		Work done on air ...	11·55
	54·20		54·20

[Note that having given K_v and γ, then $R = \left(K_p - \frac{K_p}{1{\cdot}4}\right)778 = 52{\cdot}8$.]

30. A two-stage compressor delivers air into a large receiver with the object of measuring the volume of air delivered. Find from the following data the volumetric efficiency:—

Stroke	18 in.
Effective area of L.P. piston	103·2 sq. in.
Volume of receiver and connections	984 cub. ft.
Temperature in receiver (final)	71° F. (21·7° C.).
Temperature of air entering L.P. cylinder and initial temp. in receiver	58° F. (14·45° C.).
Pressure of air in receiver (initial)	14·7 lbs. sq. in. abs.
Pressure of air in receiver (final)	92 lbs. sq. in. abs.
Number of strokes taken to raise the pressure in the receiver	5900

(London B.Sc. Eng., 1913). *Ans.* Volumetric efficiency = 0·795.

31 On a pressure-volume diagram in which the scales are: Pressure, 100 lbs. per square inch = 1 in. vertical; volume, 1 cub. ft. = 2 in. horizontally plot a point A representing $\frac{1}{2}$ lb. of a gas at a pressure of 200 lbs. per square inch and at 100° C. temperature, having given that the characteristic equation of the gas is, $pV = 0{\cdot}7T\omega$, where T is the absolute temperature C., p is the pressure in pounds per square inch, V is the volume in cubic feet, and ω is the weight of the gas in pounds.

The gas expands to twice the volume shown by the point A according to the relation PV = a constant. Calculate and write down the temperature of the gas at the end of the expansion, and mark point B on the diagram which shows its new state.

Calculate the heat received or rejected by the gas during its expansion from the state A to the state B. The specific heat of the gas at constant volume is 0·17. (B. of Ed., 1914. Higher.)

Ans. Temperature after expansion, 100° C.; heat received = 16·75 B. Th. U.

II. PROPERTIES OF STEAM.

1. Find the pressure of saturated steam at a temperature of 350° F.

Ans. 134·6 lbs. per square inch.

2. Draw a diagram illustrating the changes of H, L, ρ, and E between 102° F. and 400° F.

Find the external latent heat and intrinsic energy in 1 lb. of steam at 14·7 lbs. per square inch; temperature 212° F.; volume of 1 lb. is 26·6 cub. ft.

Ans. E = 72·3; $\rho + h = 1074{\cdot}7$.

3. Find the total heat, latent heat, internal heat, and external heat of 1 lb. of steam at a temperature of 373° F.

Find the volume of 1 lb. of steam at a pressure of 150 lbs. per square inch absolute.

Compare your answers with those given in the Steam Tables, page 453.

4. How much heat has been expended in evaporating 1 lb. of water at 60° F. into steam at 350° F., the wetness of the steam being 5 per cent.?

Ans. 1115 B.T.U.

5. A boiler evaporates 8½ lbs. of water per pound of coal. The pressure of the steam produced is 100 lbs. per square inch (temperature 328° F.), feed temperature 60° F. Find the equivalent evaporation from and at 212° F. *Ans.* 10·13 lbs.

6. A boiler evaporates 7·3 lbs. of water into steam from feed water at 60° F. Find the equivalent evaporation from and at 212° F. Temperature of steam, 357° F. The steam produced is 85 per cent. dry. *Ans.* 7·78 lbs.

7. A boiler evaporates 9·7 lbs. of water per pound of coal from water at 60° F. The temperature of the steam is 376° F. Find the equivalent evaporation from and at 212° F. *Ans.* 11·7 lbs.

8. A boiler produces 8·2 lbs. of wet steam per pound of coal from feed water at

80° F. Find the equivalent evaporation from and at 212° F. if the steam is 90 per cent. dry. *Ans.* 8·9 lbs.

9. A boiler evaporates 7·5 lbs. of superheated steam, the temperature on leaving the superheater being 650° F. The feed water enters the boiler at 85° F. The pressure of the steam is 100 lbs. absolute, and the temperature of saturated steam at this temperature is 328° F. Find the equivalent evaporation from and at 212° F. Total heat per pound = H + 32 − 85 + 0·48(650 − 328). *Ans.* 9·95 lbs.

10. When comparing different boilers, what do we take as the standard of evaporation? Feed water, 25° C.; steam, 15 per cent. wet; that is, there is 0·15 lb. of water to 0·85 lb. of steam leaving a boiler at 180° C. If 9 lbs. of this wet steam leaves a boiler for every pound of coal burnt in the furnace, what is the evaporative power of the coal, reduced to standard units of evaporation? (Bd. of Ed., Stage II., 1903.) *Ans.* 9·447 lbs.

11. Steam coming from a boiler is led into a tank of water. Show how, by using thermometers and noting the amount of water in the tank at various times, we can find the dryness of the steam leaving the boiler. (Bd. of Ed., Stage II., 1904.)

12. Steam is admitted to a tank containing 190 lbs. of water. The initial temperature of the water is 55° F., and the final temperature is 78° F. The steam condensed is 4 lbs. If the pressure of the steam is 150 lbs. absolute (temperature 358° F.), find the dryness of the steam. *Ans.* 0·941.

13. Steam is condensed in a tank containing 300 lbs. of water at 47° F. The increase in the weight of the water is 8 lbs. and the final temperature is 75° F. Find the dryness of the steam if the temperature of the entering steam is 341° F. *Ans.* 0·895.

14. Upon what principle does the throttling calorimeter depend? What is the maximum percentage of moisture that it will measure? State the formula for determining the percentage of moisture.

15. The steam in the main steam-pipe has a temperature of 320° F. It enters a throttling calorimeter, and its temperature after expansion is 267·5° F. and pressure 21 lbs. per square inch. The temperature of saturated steam at 21 lbs. is 230·5° F. Find the dryness of the steam. *Ans.* 0·99.

16. Steam enters a throttling calorimeter at 344° F., and expands to 19 lbs. per square inch. The temperature of saturated steam at 19 lbs. per square inch is 225° F. The actual temperature of the steam is 290° F. Find the dryness of the steam. *Ans.* 0·995.

17. Steam escapes from a vessel which is maintained at a temperature t_1, into a vessel whose temperature is t_2; prove that—

$$x_2 - x_1 = \frac{t_1 - t_2 - x_1(L_2 - L_1)}{L_2}$$

where x_1 and x_2 are the dryness fractions, and L_1, L_2 the latent heats. (Inst. C.E., 1904.)

18. Describe any method with which you are familiar for measuring the wetness of steam. (Inst. C.E., Oct., 1901.)

19. Draw the three characteristic curves for steam, and say under what conditions steam follows each of these curves during expansion.

20. Given the following numbers for steam, use squared paper to find $\frac{dp}{dt}$ at 150° C. The latent heat of steam at 150° C. is 500·8 in pound-Centigrade units: find the volume of a pound of steam at 150° C.

θ	145	150	155
Pressure in pounds per square foot .	8698	9966	11,380

Prove your formula. (Bd. of Ed., Stage III., 1903.)

To find the Volume of 1 lb. of Saturated Steam.—It is not easy to determine this volume directly, so it is calculated from other properties of steam which can be more accurately determined.

In applying Carnot's cycle to the steam-engine, the work obtained per pound was shown to be equal to $\frac{L_1(T_1 - T_2)}{T_1}$ in heat units, or $\frac{JL_1(T_1 - T_2)}{T_1}$ in foot-lbs.

If the temperatures are close together, this expression may be written $\frac{JL\delta T}{T}$.

Referring to the indicator diagram, the length MN is $u - w$, where u = vol. of 1 lb. of steam, and w = vol. of 1 lb. of water. Its height = δP.

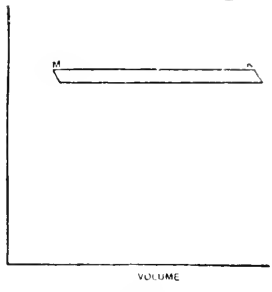

FIG. 477.

The area of the diagram = work done = $\delta P \times (u - w)$

$$\therefore \delta P(u - w) = \frac{JL\delta T}{T}$$

In the limit $u - w = \frac{JL}{T} \times \frac{dT}{dP}$

or $u = w + \frac{JL}{T} \times \frac{dT}{dP}$

The volume of 1 lb. of steam, when calculated by the above formula, depends upon J, which causes the volume to vary in different Tables according to whether 772 or 778 has been used in the calculation.

In the example given we find, from plotting on squared paper—

$$\frac{dP}{dT} = 268$$

$$u = w + \frac{JL}{T} \times \frac{dT}{dP}$$

$$= 0{\cdot}016 + \frac{1393 \times 500{\cdot}8}{150 + 273} \times \frac{1}{268} = 0{\cdot}016 + 6{\cdot}156$$

$$= 6{\cdot}172 \text{ cub. ft.}$$

21. Derive the formula $(v - w) = \frac{JL}{T} \times \frac{dT}{dP}$. Steam at 90 lbs. absolute ($t = 320$), L = 888·4, the change of pressure for one degree is 1·28 lbs. per square inch: find the volume of 1 lb. of dry steam, taking $w = 0{\cdot}016$. (Inst. C.E., Oct., 1903.)

Ans. 4·86 cub. ft.

22. What is the volume of 1 lb. of steam at 165° C., the latent heat being 490 in pound-Centigrade units? To find $\frac{dp}{dt}$ approximately, use squared paper and the following information:—

θ° C.	160	165	170
Pressure in pounds per square foot.	12,940	14,680	16,580

Prove your formula. (Bd. of Ed., Stage III., 1900.) *Ans.* 4·29 cub. ft.

23. How much heat must be given to 1 lb. of feed water at 40° C. to convert it into steam which is 10 per cent. wet at 180° C.? An engine uses 5000 lbs. of this steam per hour, the indicated horse-power being 180. What is the indicated energy per hour in heat units? How much heat goes to the condenser or is radiated? (Bd. of Ed., Stage II., 1905.)

Ans. 573 heat units; indicated energy = 255,900 heat units; heat to condenser = 2,609,100 heat units.

24. An engine uses 4000 lbs. of wet steam per hour at 170° C., there being 90 per cent. steam and 10 per cent. water. If the feed water was at 20°, how much heat is supplied? If the indicated horse-power is 140, how much heat energy is indicated per hour? If we imagine no heat to be radiated, and if the circulating

water of the condenser is raised 10 degrees Centigrade, how many pounds of circulating water are being used per hour? (Bd. of Ed., Stage II., 1901.)

Ans. 4,244,400 B.T.U.; 356,298 B.T.U.; 216,000 lbs.

25. Feed water 25° C.; steam 10 per cent. wet; that is, there is 0·1 lb. of water to 0·9 lb. of steam at 170° C. If 26 lbs. of this wet steam enter the cylinder per indicated horse-power, how much of the heat passes to the exhaust? If the stuff leaves the cylinder as saturated steam and water at 105° C., what is its wetness? Neglect radiation or other loss of heat by the cylinder. (Bd. of Ed., Stage III., 1903.)

Ans. 13,788 heat units per I.H.P. per hour above 25° C.; wetness, 15·5 per cent.

26. Explain fully what occurs when heat is applied to water until it is converted into dry saturated steam, the pressure being maintained constant during the process. Illustrate your remarks by means of the temperature-entropy chart, taking the following numerical data:—

Weight of water	1 lb.
Initial temperature of water	100° F.
Pressure of steam	150 lbs. per square inch absolute
Temperature of saturated steam at this pressure	358° F.
Total heat	1191 B.T.U.

How many heat units are required throughout the whole process, and how many are required for the mere conversion of the water into steam after it has been raised to the steam temperature? (Note.—A hand-sketch of the chart will be sufficient.) (Inst. C.E., Feb., 1900.)

27. If water is supplied at 60° F. and evaporated at 120 lbs. pressure per square inch ($t = 341°$ F.), how many pounds of water will be evaporated by 5000 thermal units? Give full details of your working, and calculate each portion of the heat addition to the water separately. (Inst. C.E., Feb., 1901.)

Ans. Sensible heat = 281 B.T.U.; latent heat = 875·3 B.T.U.; total heat = 1156·3 B.T.U.; water evaporated = 4·325 lbs.

28. Calculate in British thermal units the external and internal heat per pound of saturated steam which is supplied from a boiler working at a pressure of 100 lbs. per square inch (absolute).

Number of cubic feet per pound of steam	4·37
Total heat of evaporation from 32° F.	1182 B.T.U.
Temperature of steam	328° F.

(Inst. C.E., Oct., 1901).

Ans. External heat = 80·9 B.T.U.; internal heat = 1101·1 B.T.U.

29. Distinguish between the "internal work" and the "external work" done in changing the state of a fluid. If the heat expended in generating a pound of steam be 1000 thermal units, and the external work done be 60,000 foot-lbs., find how much internal work is done. (Inst. C.E., Oct., 1898.) *Ans.* 922·9 B.T.U.

30. Calculate the number of British thermal units supplied per pound of steam, starting from water at 70° F., and generated in a boiler at a pressure of 150 lbs. per square inch (temperature 358° F.), and afterwards superheated to a temperature of 500° F. You may assume the common value for the specific heat of superheated steam to be correct. (Inst. C.E., Oct., 1901.) *Ans.* 1219·6 B.T.U.

31. A steam electric generator on three long trials, each with a different point of cut-off on steady load, is found to use the following amounts of steam per hour for the following amounts of power:—

Pounds of steam per hour	4020	6650	10,800
Indicated horse-power	210	480	706
Kilowatts produced	114	290	435

Find the indicated horse-power and the weight of steam used per hour when 330 kilowatts are being produced.

Find in the four cases the amounts of steam used per Board of Trade unit (that is, per kilowatt-hour). (Bd. of Ed., Stage II., 1901.) *Ans.* 545 I.H.P.; 7590 lbs.

32. Taking the hypothetical indicator diagram, if the average pressure during the stroke is

$$p_1 \frac{1 + \log_e r}{r} - p_3$$

where p_1 is the initial pressure, and p_3 is the back pressure; if r, the ratio of cut-off, is 3, if p_3 is 17, if the area of the piston is 150 sq. in., if the crank is 1·2 feet, if there are 300 strokes per minute, then the horse-power is—

$$\mathrm{P} = ap_1 - b$$

Find the constants a and b.

If u is the volume of 1 lb. of initial steam, then the weight in pounds per hour is—

$$\mathrm{W} = \frac{c}{u_1}$$

Find the constant c.

Given the following values of p_1 and u_1, find P and W and tabulate them:—

p_1	60	80	100	120
u_1	7·03	5·37	4·356	3·671

(Bd. of Ed., Stage II., 1905.) *Ans.* $a = 2{\cdot}28$; $b = 55{\cdot}5$; $c = 15{,}000$.

p_1	60	80	100	120
P	81	127	172	217
W	2133	2793	3444	4091

33. If $p = 79{\cdot}03$ when $\theta = 155°$ C., and $p = 89{\cdot}86$ when $\theta = 160°$ C., find θ and $\frac{dp}{d\theta}$ when p is 85, assuming that $p = a(\theta + b)^5$. (Bd. of Ed., Stage II., 1899.)

Answer.—

$$p = a(\theta + b)^5; \quad \frac{p}{a} = (\theta + b)^5$$

$$\therefore (\theta + b) = \left(\frac{p}{a}\right)^{\frac{1}{5}} \quad \ldots\ldots\ldots\ldots\ldots\ldots \quad (1)$$

$$\frac{d\theta}{dp} = \frac{1}{a^{\frac{1}{5}}} \cdot \tfrac{1}{5} \cdot p^{-\frac{4}{5}} \text{ and } \frac{dp}{d\theta} = 5a^{\frac{1}{5}} p^{\frac{4}{5}}$$

Substituting in equation (1) to find a—

$$155 + b = \left(\frac{79{\cdot}03}{a}\right)^{\frac{1}{5}} \quad \ldots\ldots\ldots\ldots \quad (2)$$

$$160 + b = \left(\frac{89{\cdot}86}{a}\right)^{\frac{1}{5}}$$

$$\therefore \text{ by subtraction we have } 5 = \frac{2{\cdot}459}{a^{\frac{1}{5}}} - \frac{2{\cdot}396}{a^{\frac{1}{5}}}$$

$$5a^{\frac{1}{5}} = 0{\cdot}063$$

$$\therefore \frac{dp}{d\theta} = 0{\cdot}063 \times 85^{\frac{4}{5}} = 0{\cdot}063 \times 34{\cdot}95 = 2{\cdot}202$$

the units being pounds per square inch and degrees C.

To find b, substitute the valve of a^x in (2)—

$$155 + b = (79{\cdot}03)^{\frac{1}{5}} \times \frac{5}{0{\cdot}063}$$

$$b = 35{\cdot}2$$

To find θ—

$$\theta + 35{\cdot}2 = \left(\frac{85}{a}\right)^{\frac{1}{5}}$$

$$\theta + 35{\cdot}2 = \frac{2{\cdot}431 \times 5}{0{\cdot}063} = 193$$

$$\therefore \theta = 193 - 35{\cdot}2 = 157{\cdot}8^{\circ}\ \text{C.}$$

34. The volume of 1 lb. of saturated steam at 160° C. has been calculated by the well-known formula from latent heat, etc., and found to be 4·82 cub. ft. What value must have been taken for $\frac{dp}{d\theta}$? Take Joule's equivalent as 1393. Prove the formula to be correct. (Bd. of Ed., Stage III., 1899.) *Ans.* 330.

35. Define the terms "superheated" and "dry saturated" as applied to steam. During the trials of an engine using superheated steam, the steam was supplied at a pressure of 130 lbs. per square inch absolute, and the superheat was 300° F. The engine consumed 12 lbs. of steam per I.H.P. hour, the feed temperature being 120° F. Express the consumption in "pounds of dry saturated steam" at the same pressure, and also in "pounds of water evaporated from and at 212° F."

At a pressure of 130 lbs. per square inch absolute, the boiling-point is 347·2° F., the total heat of 1 lb. of dry saturated steam is 1,187·9 B.T.U., reckoned from 32° F., and the latent heat is 869·4 B.T.U. Take the mean specific heat of the superheated steam as 0·48. (Inst. C.E., 1905.) *Ans.* 13·57 lbs. and 15·44 lbs.

36. Steam of wetness fraction w_1 is expanded adiabatically from a pressure p_1 to a pressure p. The expansion curve is pv^n = constant, where $n = 1{\cdot}135 - 0{\cdot}1w$, and the specific volume of steam is given by $PV^{1\frac{1}{2}}$ = constant. Find the wetness of the steam after expansion from p_1 to p in terms of p_1, p, and w. Hence find the wetness of 5 per cent. wet steam after adiabatic expansion from 150 to 20 lbs. per square inch absolute. (London B.Sc., 1912.)

Ans. Let q_1 = the dryness of steam before expansion
$= 1 - w_1$
q_2 = dryness of steam after expansion
$= 1 - w_2$

$$\therefore P_1(q_1V_1)^n = P_2(q_2V_2)^n \quad \ldots\ldots\ldots \quad (1)$$

where V_1 and V_2 are the volumes of 1 lb. of dry steam before and after expansion respectively.

$$\text{Also } P_1V_1^{1\frac{1}{2}} = P_2V_2^{1\frac{1}{2}}; \text{ and } \frac{V_1}{V_2} = \left(\frac{P_2}{P_1}\right)^{\frac{16}{17}}$$

$$\text{From (1)} \quad \frac{q_2}{q_1} = \frac{1 - w_2}{1 - w_1} = \left(\frac{P_1}{P_2}\right)^{\frac{1}{n}} \frac{V_1}{V_2}$$

$$\therefore 1 - w_2 = (1 - w_1)\left(\frac{P_1}{P_2}\right)^{\frac{1}{n}}\left(\frac{P_2}{P_1}\right)^{\frac{16}{17}}$$

$$= (1 - w_1)\left(\frac{P_1}{P_2}\right)^{\frac{1}{n} - \frac{16}{17}}$$

$$w_2 = 1 - (1 - w_1)\left(\frac{P_1}{P_2}\right)^{\frac{1}{n} - \frac{16}{17}}$$

Substituting the numerical values given in the question—

$$w_2 = 1 - (1 - 0\,05)\left(\frac{150}{20}\right)^{\frac{1}{1\cdot135 - 0\cdot1\times0\cdot05} - \frac{16}{17}}$$

$$= 1 - 0\cdot95\left(\frac{15}{20}\right)^{0\cdot9412 - 0\,8849}$$

$$= 0\cdot818$$

37. Prove that if the volumes of a fluid before and after undergoing a change of state at pressure p and temperature T are v_1 and v_2 respectively—

$$v_2 - v_1 = \frac{J\lambda}{T} \times \frac{dT}{dP}$$

where λ is the heat absorbed in the change and J is Joule's equivalent.

Apply this equation to determine the volume of 1 lb. of steam at 150 lbs. pressure, having given that—

p lbs./□″	t° F.	λ in B.T.U.
140	353	865·5
150	358·5	861·6
160	363	857·9

(Sheff. Univ.)

Ans. Vol. = 3·03 cub. ft. (See II. 20.)

38. In a given vapour the relation between the temperature t and pressure p is given by the expression—

$$t = 140\sqrt[4]{p} + 4$$

and the latent heat by—

$$L = 1200 - 0\cdot5t$$

where t is measured on the Fahrenheit scale and L in B.Th.U.

These relations are also expressed by—

$$\left.\begin{aligned} t &= 77\cdot8\sqrt[4]{p} - 15\cdot5 \\ L &= 658 - 0\cdot5t \end{aligned}\right\}$$

where t is measured on the Centigrade scale, and L in pound calories, p in each case being the pressure in pounds per square inch absolute. Find the specific volume of dry saturated vapour when at a pressure of 81 lbs. per square inch absolute. The volume of the liquid is 0·02 cub. ft. per pound. (London B.Sc. Eng. 1913.)

Answer.—The formula connecting the volume of a vapour with its pressure, temperature, and latent heat is—

$$u = w + \frac{JL}{T}\frac{dT}{dP} \quad \text{(p. 468)}$$

$$T = t + 460 = 140\sqrt[4]{81} + 4 + 460$$

$$T = 884° \text{ absolute, or } 424° \text{ F.}$$

$$L = 1200 - 0\cdot5 \times 424$$

$$= 988 \text{ B.Th.U.}$$

Before finding $\frac{dT}{dP}$ express T in terms of the pressure in pounds per square foot, or $\frac{dT}{dP}$ may be taken as $\frac{1}{144}\frac{dT}{dp}$

Expressing T in terms of the pressure per square foot—

$$T = 140\sqrt[4]{\frac{P}{144}} + 460 + 4$$

where P = pressure in lbs. per square foot

$$\therefore\ T = 40{\cdot}41\sqrt[4]{P} + 464$$

$$\text{then } \frac{dT}{dP} = 40{\cdot}41 \times \frac{1}{4}P^{-\frac{3}{4}}$$

$$\text{Let } P = 81 \times 144 \quad \text{then } \frac{dT}{dP} = \frac{40{\cdot}41}{4 \times 144^{\frac{1}{4}} \times 81^{\frac{3}{4}}} = 0{\cdot}009001$$

$$\therefore\ u = \frac{778 \times 988}{884} \times 0{\cdot}009001 + 0{\cdot}02$$

$$= 7{\cdot}847 \text{ cub. ft.}$$

39. In a combined separating and wire-drawing calorimeter the following observations were taken :—

Total quantity of steam passed through the diaphragm, 52 lbs.; water drained from the separator, 2·7 lbs.; steam pressure before wire-drawing, 118 lbs. per square inch absolute (temperature, 340°F.) (171·1°C.), latent heat, 878·3 B.Th.U. (488 C.H.U.). Temperature of steam on leaving, 232·6° F. (111·4° C.). Steam pressure on leaving, atmospheric. Find the wetness fraction of the steam on entry. You may take the specific heat of superheated steam as 0·48. (London B.Sc. Eng., 1913.) *Ans.* Wetness of steam = 8·3 per cent.

40. Taking the hypothetical diagram, no cushioning or clearance, expansion part *pv* constant, the mean pressure in the forward stroke is—

$$\frac{p_1(1 + \log_e r)}{r}$$

If the back pressure in the cylinder is 17 lbs. per square inch, and if we look upon friction as equivalent to a back pressure of 14 lbs. per square inch, what is the *real* work done in a stroke of l feet, the area of the piston being A sq. in.? What is the volume of steam admitted for one stroke? What is the work done per cubic foot of steam if $p_1 = 100$ lbs. per square inch and $r = 4$? (B. of Ed., 1907.)

Answer.—

$$\text{Mean pressure} = \left\{\frac{P(1 + \log_e r)}{r} - 17 - 14\right\}$$

$$= 38{\cdot}95 \text{ lbs.}$$

where P = initial pressure

r = number of expansions = 3

$$\text{work done per stroke} = 38{\cdot}95 \times \text{area} \times \text{stroke}$$

$$\text{steam used per stroke} = \frac{\text{area}}{144} \times \text{stroke} \times \frac{1}{r}$$

$$\therefore\ \text{work per cubic foot} = \frac{38{\cdot}95 \times \text{area} \times \text{stroke} \times 144 \times r}{\text{area} \times \text{stroke}}$$

$$= 16830 \text{ ft.-lbs.}$$

41. Steam passes through a throttling calorimeter, where it is reduced in pressure from 120 lbs. per square inch (temperature, 341° F.) to 15 lbs. per square inch. The temperature after expansion is 230° F. The temperature of steam at 15 lbs. per square inch is normally 213° F. Find the original dryness of the steam. The latent heat of 1 lb. of dry steam is approximately $1114 - 0{\cdot}7t$ thermal units, where t is the temperature of the steam in degrees Fahrenheit. The specific heat of superheated steam may be taken as 0·5. (Inst. C.E., October, 1913.) *Ans.* Dryness of steam = 96·6 per cent.

III. TEMPERATURE—ENTROPY DIAGRAMS.

1. Find the heat given to 1 lb. of feed water at 40° C. to convert it into wet steam (15 per cent. water) at 170° C. If 25 lbs. of this wet steam reaches the cylinder per horse-power hour, what percentage of the heat leaves with the exhaust or is radiated from the cylinder?

Temperature	170° C.	100° C.	40° C.
Entropy of 1 lb. of water	0·490	0·314	0·137
Entropy of 1 lb. of steam	1·585	1·748	1·982

Draw a $\theta\phi$ diagram. State in heat units and foot-pounds the energy that is represented to scale by one square inch of your figure. Find the work that would be done per pound of this wet steam in a perfect steam-engine (Rankine cycle)

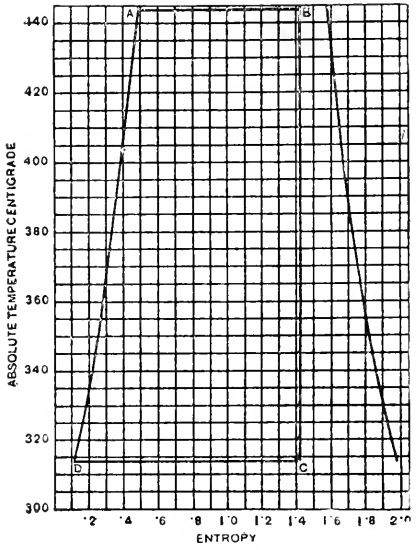

FIG. 478.

working between these temperatures of 170° C. and 40° C. What is the efficiency ratio of the engine as compared with this perfect steam-engine?

Answers must be correct to one per cent. The examiners do not want to be told how calculations are made by the $\phi\theta$ diagram; candidate must really make the calculations correctly. Also, calculation by a formula is not what is here wanted. (Bd. of Ed., Stage III., 1902.)

$$\text{Heat required} = h + x\text{L} = 170 - 40 + 0{\cdot}85\text{L}$$
$$\text{L} = 606{\cdot}5 - 0{\cdot}695 \times 170 = 488{\cdot}4$$

heat required = $170 - 40 + 0{\cdot}85(488{\cdot}4) = 130 + 415 = 545$ units

heat entering cylinder = $545 \times 25 = 13{,}625$ units

heat transformed into work = $\frac{33000 \times 60}{1393} = 1414$ units per hour

percentage to exhaust = $\frac{13625 - 1414}{13625} = \frac{12211}{13625} = 0{\cdot}896$ or 89·6 per cent.

The amount of heat converted into work is shown by the area ABCD on the $t - \phi$ diagram.

This area = 283 squares, and each square is equal to $5 \times 0{\cdot}1 = 0{\cdot}5$ heat units

$\therefore$ total area represents $283 \times 0{\cdot}5 = 141{\cdot}5$ heat units

efficiency = $\frac{56{\cdot}56}{141{\cdot}5} \times 100 = 39{\cdot}9$ per cent.

2. Given the following information, draw a $t - \phi$ diagram :—

A quantity of water-steam whose weight is unknown has the volume 6·16 cub. ft. at 160° C. It expands adiabatically to 150° C., and then its volume is 26·27 cub. ft. ; neglect the volume of the water part.

θ° C.	ψ of 1 lb. of water.	ϕ of 1 lb. of steam.	u, the cubic feet of steam per pound.
160	0·466	1·604	4·827
115	0·354	1·705	16·32

What is the weight of stuff with which we are dealing, and how much of it is steam and how much of it water at the beginning and at the end ? (Bd. of Ed., Hons., 1904.)

On the $t - \phi$ diagram 4·827 cub. ft. are represented by a length measured on the entropy scale = $(1{\cdot}604 - 0{\cdot}466) = 1{\cdot}138$.

Therefore 6·16 cub. ft. will be represented by $\frac{1{\cdot}138 \times 6{\cdot}16}{4{\cdot}827} = 1{\cdot}452$, and the total length from the zero line = $1{\cdot}452 + 0{\cdot}466 = 1{\cdot}918$.

Similarly, 26·27 cub. ft. are represented by $(1{\cdot}705 - 0{\cdot}354)\frac{26{\cdot}27}{16{\cdot}32} = 2{\cdot}174$, and the total length from the zero line = $2{\cdot}174 + 354 = 2{\cdot}528$.

If the diagram had been drawn for x lbs. of steam and water instead of 1 lb., and the mixture had expanded adiabatically, ϕ would have been constant.

Therefore the additional water required in order to increase the entropy from 1·918 to 2·528 = $\frac{2{\cdot}528 - 1{\cdot}918}{0{\cdot}466 - 0{\cdot}354}$, because every pound of water increases the entropy by $0{\cdot}466 - 0{\cdot}354$.

$\therefore$ total water and steam present at the beginning = $\frac{0{\cdot}610}{0{\cdot}112} + 1 = 6{\cdot}446$ lbs.

of which $\frac{6{\cdot}16}{4{\cdot}827}$ lbs. are steam = 1·276 lbs.

$\therefore$ dryness at beginning = $\frac{1{\cdot}276}{6{\cdot}446} = 0{\cdot}192$

The steam present after expansion = $\frac{26{\cdot}27}{16{\cdot}32} = 1{\cdot}61$ lbs.

$\therefore$ dryness after expansion = $\frac{1{\cdot}61}{6{\cdot}446} = 0{\cdot}25$

3. What percentage of steam initially containing 10 per cent. of moisture will

be liquefied during adiabactic expansion from 307° F. to 120° F.? (Inst. C.E., Feb., 1903.) *Ans.* Wetness after expansion = 25 per cent.

4. The entropy of 1 lb. of water for the absolute Centigrade temperature t is—

$$\phi = \log_e \frac{t}{273}$$

Calculate this for two values of the temperature, say 70° C. and 170° C. It is, of course, 0 at 0° C. Plot the temperature-entropy diagram for water. State exactly how much heat is represented by the area of 1 sq. in. of your diagram. (Bd. of Ed., Stage II., 1903.)

5. Find the entropy added to 1 lb. of water at 181° C. in forming 1 lb. of wet steam at 181° C. if nine-tenths of it is steam and one-tenth water.

Sketch the appearance of a water-steam temperature-entropy diagram, and show how it informs us about liquefaction during adiabatic expansion. (Bd. of Ed., Stage II., 1901.) *Ans.* 0·9495.

6. Given the following information, draw a $t\phi$ diagram. On it mark the point which shows a pound of water-steam which is 90 per cent. steam and 10 per cent. water at 160° C. Now draw the adiabatic to 115° C. At 115° C. how much of the stuff is steam?

θ° C.	ϕ of 1 lb. of water.	ϕ of 1 lb. of dry steam.
160	0·466	1·604
115	0·354	1·705

(Bd. of Ed., Stage II., 1904.) *Ans.* 84·1 per cent.

7. Explain what is meant by "entropy," and show how the change of state of a fluid consequent on the application of heat is represented graphically by a temperature-entropy diagram. A fluid receives heat (1) at a constant temperature of 300° F.; (2) as the temperature rises at a uniform rate from 300° F. to 500° F.; (3) at a constant temperature of 500° F.; the quantity of heat received in each stage being 1000 thermal units. Calculate the change of entropy, and sketch the diagram. (Inst. C.E., Feb., 1899.) *Ans.* (1) 1·314; (2) 1·166; (3) 1·041.

8. Show how the heat supplied during the expansion of a mixture of steam and water is graphically represented on a temperature-entropy diagram. Show that if no heat is supplied to steam which is originally dry, it necessarily condenses during expansion, and exhibit graphically the heat necessary to prevent condensation. (Inst. C.E., Oct., 1898.)

9. A pound of water at 0° C. is heated as water to 145° C., and then converted into wet steam at the same temperature with 15 per cent. of wetness (p is 60·4 lbs. per square inch, u is 7·009 cub. ft. per pound). Find its intrinsic energy and its entropy in excess of what they were at 0° C. (Bd. of Ed., Stage II., 1900.)
Ans. 748,655 foot-lbs.; 1·452.

10. Show how to construct the entropy diagram for steam, and state the use of the diagram.

Steam expands adiabatically from being initially wet. Find the change in the dryness fraction for a given range of temperature. (Inst. C.E., 1904.)

11. If an indicator diagram of a steam-engine cutting off at $\frac{3}{8}$-stroke and working between a pressure of 100 lbs. and 30 lbs. absolute were supplied to you, show fully how you would draw an entropy chart so as to find out the dryness fraction at the end of expansion. State what additional data would be required. (Inst. C.E., Oct., 1902.)

12. Given the following information, draw a $t\phi$ diagram. A pound of water-steam at 160° C. expands adiabatically to 115° C. If 90 per cent. of it is steam at the beginning, how much of it is steam at the end? If only 30 per cent. of it is steam at the beginning, how much of it is steam at the end?

θ° C.	ϕ of 1 lb. of water.	ϕ of 1 lb. of steam.	v, the cubic feet of steam per pound	p, the pressure in pounds per square inch.
160	0·466	1·604	4·817	89·86
115	0·354	1·705	16·32	25·54

What is the actual volume v at the beginning and end in both cases, neglecting the volume of the water part? Assume that in each case there is an adiabatic law like pv^n constant, and find n. (Bd. of Ed., Stage III., 1904.)

Ans. 83·5 per cent.; 33·5 per cent.; 4·3353 cub. ft.; 13·62 cub. ft.; 1·445 cub. ft.; 5·466 cub. ft.; $n = 1·10$ and 0·94.

13. Given the following numbers, draw the temperature-entropy diagram:—

Temperature	100° C.	130° C.	160° C.
Entropy of 1 lb. of water .	0·314	0·393	0·466
Entropy of 1 lb. of steam .	1·748	1·667	1·604

Steam 90 per cent. dry at 160° C.: find its dryness as it expands adiabatically, at 130° C. and at 100° C. (Bd. of Ed., Stage III., 1901.)

Ans. 86·1 per cent. and 82 per cent.

14. Taking the following figures, draw a $\theta\phi$ diagram. State in heat-units and foot-pounds the energy that is represented to scale by 1 sq. in. of your figure. Find the work that would be done by 1 lb. of steam 90 per cent. dry at 160° C. on the Rankine cycle, the lower temperature being 100° C.

Your answers must be correct to 3 per cent.

The examiners do not want to be told *how* calculations are to be made by the diagram; candidates must really make the calculations correctly. Also calculation by a formula is not what is here wanted.

Temperature	160° C.	130° C.	100° C.
Entropy of 1 lb. of water	0·465	0·391	0·313
Entropy of 1 lb. of steam	1·603	1·668	1·749

Suppose release to take place before 100° C. is reached in the expansion, what assumption is made to enable us to represent release on the $\theta\phi$ diagram? (Bd. of Ed., Hons., 1903.) *Ans.* Work done = 65·1 B.T.U.

15. Sketch the entropy diagram for steam at 190° C. ($p = 182·4$ lbs. per square inch), superheated 50° C. above its temperature of production, expanded adiabatically to 40° C. and condensed. Find the work done per pound of steam. What is the state of the steam as to dryness at the end of the expansion? (Bd. of Ed., Hons., 1900.)

16. Define the term "thermal efficiency." Work out the formula for the thermal efficiency of the Carnot cycle for a heat-engine, and for the Rankine (Clausius) cycle for a steam-engine, or show the meaning graphically by means of the temperature-entropy chart. Why is the thermal efficiency of the Carnot cycle greater than that of the Rankine cycle? (Inst. C.E., Oct., 1899.)

Steam-engine using Carnot's Cycle.

Let a small amount of water be placed in a non-conducting cylinder. Let there be two indefinite sources of heat, T_1 and T_2, and a non-conductor of heat, N.

Let the water be at the temperature T_1 of the hot body. Then, if the hot body

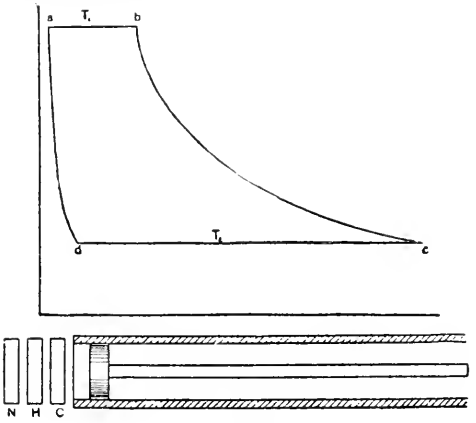

FIG. 479.

be applied, the water will be converted into steam at constant pressure and temperature. This is represented by the line *ab* of the indicator diagram.

Then remove the source of heat T_1, and let adiabatic expansion take place until the temperature T_2 is reached.

Next apply C. Compress the steam isothermally at T_2, allowing C to take the heat generated. Stop the compression at *d*.

Now remove C and apply N, allowing adiabatic compression to take place to the original temperature T_1.

The indicator diagram for the cycle is *abcd*.

The process is evidently reversible. The heat is taken in at T_1 and rejected at T_2;

$$\therefore \text{ the efficiency of the cycle} = \frac{T_1 - T_2}{T_1}$$

The heat received for every pound of water evaporated $= L_1$

$$\therefore \text{ the heat converted into work per pound} = L_1 \times \frac{(T_1 - T_2)}{T_1}$$

In practice the last step is not taken, namely, compressing the substance adiabatically to the temperature T_1. Thus the substance in practice does not receive all its heat at the highest temperature, but at temperatures lower than T_1.

Steam-engine not taking in all its Heat at the Highest Temperature (Rankine Cycle).

Let 1 lb. of water be heated from T_2 to T_1, then converted into steam and expanded adiabatically to T_2. Let it be condensed at T_2 and returned to the boiler. To find the heat turned into work.

In this case most of the heat is taken in at T_1, but a certain proportion of it is taken in between T_1 and T_2.

If a very small proportion of the heat be taken in at, say, T, then the efficiency of this amount $= \frac{T - T_2}{T}$, and the heat converted into work $= \frac{\delta Q \times (T - T_2)}{T}$.

The total heat converted into work $= \Sigma \frac{\delta Q(T - T_2)}{T}$, where δQ represents the heat taken in at T.

Taking the specific heat of water as unity, $\delta Q = T$, the heat required per pound to raise water from T_1 to $T_2 = T_1 - T_2$, and the heat required to convert 1 lb. of water at T_1 to steam at $T_1 = L_1$.

Therefore taking the limit and integrating, we have—

Work done per pound

$$= W = \int_{T_2}^{T_1} dT \frac{(T - T_2)}{T} + \frac{L_1(T_1 - T_2)}{T_1}$$

$$= \int_{T_2}^{T_1} dT - T_2 \int_{T_2}^{T_1} \frac{dT}{T} + \frac{L_1(T_1 - T_2)}{T_1}$$

Work per pound

$$= T_1 - T_2 - T_2 \log_e \frac{T_1}{T_2} + \frac{L_1(T_1 - T_2)}{T_1}$$

It is obvious that if the whole of the water is not converted into steam, but has a dryness $= x_1$,

$$\text{then } W = T_1 - T_2 - T_2 \log_e \frac{T_1}{T_2} + \frac{x_1 L_1(T_1 - T_2)}{T_1}$$

Work done per pound of Steam by an Engine using superheated steam and working on the Rankine Cycle.

The work done is represented by the shaded portion *abcdea* of the temperature entropy diagram.

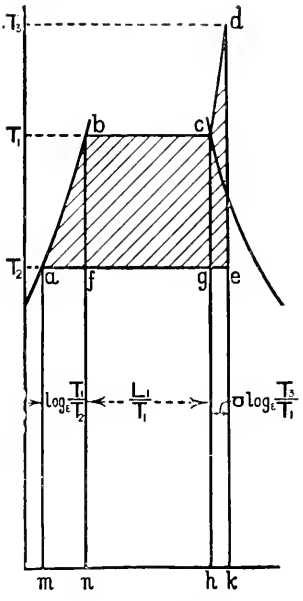

FIG. 479A.

Area *abcdea* = area *mabn* − area *mafn* + area *fbcg* + *hcdk* − area *hgek*

$$= (T_1 - T_2) - T_2 \log_e \frac{T_1}{T_2} + \frac{L_1(T_1 - T_2)}{T_1} + \sigma(T_3 - T_1) - \sigma T_2 \log_e \frac{T_3}{T_1}$$

where σ is the specific heat.

17. Obtain the adiabatic equation for steam. One pound of steam is expanded in a turbine from 160 lbs. absolute pressure to 150 lbs. What is the dryness and volume of the steam after expansion? The volume of 1 lb. of steam at 150 lbs. pressure is 3·01 cub. ft.; $L_1 = 857{\cdot}4$; $L_2 = 861{\cdot}2$; $T_1 = 824{\cdot}4$; $T_2 = 819{\cdot}3$. Find also the velocity acquired by the steam.

Adiabatic Equation.

The heat required to produce 1 lb. of wet steam from water at $T_2 = T_1 - T_2 + x_1 L$.

When this wet steam is expanded adiabatically to T_2 and then condensed, the work done per pound $= T_1 - T_2 - T_2 \log_e \frac{T_1}{T_2} + x_1 L_1 \frac{(T_1 - T_2)}{T_1}$. The heat rejected to the condenser must therefore be the difference between these two quantities, namely—

$$T_1 - T_2 + x_1 L_1 - \left[T_1 - T_2 - T_2 \log_e \frac{T_1}{T_2} + \frac{x_1 L_1 (T_1 - T_2)}{T_1} \right] = \frac{x_1 L_1 T_2}{T_1} + T_2 \log_e \frac{T_1}{T_2}$$

The heat rejected at T_2 is the latent heat at $T_2 = x_2 L_2$, if x_2 is the dryness;

$$\therefore x_2 L_2 = \frac{x_1 L_1 T_2}{T_1} + T_2 \log_e \frac{T_1}{T_2}$$

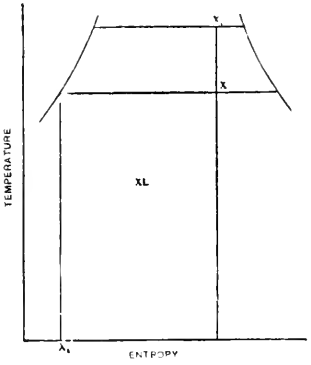

FIG. 480.

$$\frac{x_2 L_2}{T_2} = \frac{x_1 L_1}{T_1} + \log_e \frac{T_1}{T_2}$$

This equation may be used to find the dryness of steam after adiabatic expansion has taken place from T_1 to T_2, and also to find the volume of the steam after expansion.

Substituting the numbers given in the question, we have—

$$\begin{aligned} x_2 &= \frac{819{\cdot}3}{861{\cdot}2}\left(\frac{857{\cdot}4}{824{\cdot}4} + \log_e \frac{824{\cdot}4}{819{\cdot}3}\right) \\ &= \frac{819{\cdot}3}{861{\cdot}2}\left(\frac{857{\cdot}4}{824{\cdot}4} + 0{\cdot}005987\right) \\ &= \frac{819{\cdot}3}{861{\cdot}2}(1{\cdot}040 + 0{\cdot}005987) \\ &= \frac{819{\cdot}3}{861{\cdot}2}(1{\cdot}0459) = 0{\cdot}9954 \end{aligned}$$

Steam present after expansion = $0{\cdot}9954 \times 3{\cdot}01 = 2{\cdot}995$ cub. ft.

In a steam-turbine, if the steam expand adiabatically without doing external work, all the energy is converted into velocity. Taking the above case—

$$\begin{aligned} \text{Loss of energy} &= (x_1 L_1 - x_2 L_2 + t_1 - t_2) \\ \text{This} &= \frac{v^2}{2g} \\ \therefore \frac{v^2}{64{\cdot}4} &= 778(857{\cdot}4 - 0{\cdot}9954 \times 861{\cdot}2 + 5{\cdot}4) \\ v &= \sqrt{64{\cdot}4 \times 5{\cdot}6 \times 778} \\ &= 529{\cdot}7 \text{ ft. per second} \end{aligned}$$

18. Find an expression for the Rankine or Clausius thermal efficiency for a steam-engine receiving saturated steam at the stop-valve temperature T_a and exhausting at T_r. Sketch an entropy-temperature diagram, and show by means of areas how this efficiency may be graphically represented upon it. (Inst. C.E., Oct., 1901.)

19. Describe the Clausius-Rankine cycle commonly employed as a standard of efficiency in steam-engines, and obtain an equation for the useful work done per pound of steam in an engine working with this cycle. (Inst. C.E., Oct., 1898.)

20. A steam electric generator on three long trials, each with a different point of cut-off on steady load, is found to use the following amounts of power :—

Pounds of steam per hour	4020	6650	10,800
Indicated horse-power . .	210	480	706
Kilowatts produced . . .	114	290	435

Find the indicated horse-power and the weight of steam used per hour when 330 kilowatts are being produced.

Find in the four cases the amounts of steam used per Board of Trade unit (that is, per kilowatt-hour).

In what way does regulation by varying cut-off differ as to economy of steam under varying load factors, from regulation by varying the pressure, letting the cut-off remain constant? (Bd. of Ed., Stage III., 1901.)

Ans. 545 I.H.P.; 7590 lbs. of steam; 35·26 lbs.; 22·93 lbs.; 24·93 lbs.; 22·97 lbs.

21. Answer only *one* of the following (*a*) or (*b*) :—

(*a*) Find the algebraic formula in common use for the effective pressure in

a cylinder, taking the usual hypothetical indicator diagram; expansion law, "pv^n constant." Take two cases: when $n = 1$ and when n has any other value. Take initial pressure as p_1, back pressure as p_2.

(*b*) If it be taken that 1 lb. of water receives 1 unit of heat for every degree of rise of temperature, find the entropy of 1 lb. of water at any temperature. Now write out in terms of the temperature, the entropy of 1 lb. of stuff which is 10 per cent. water, 90 per cent. steam. (Bd. of Ed., Stage III., 1903.)

22. Rankine cycle, perfect steam-engine, with dry steam at t_1 expanded adiabatically to t_2: find a formula for the work done per pound of steam. How do we find the answer graphically? (Bd. of Ed., Hons., 1899.)

23. A perfect steam-engine, Rankine cycle; given the higher and lower temperatures and initial wetness or amount of superheating. Using a $t\phi$ diagram, show how you would find the work done per pound of stuff. If the stuff is released before the end of the expansion, show the amount of lessening of work done. (Bd. of Ed., Stage III., 1899.)

24. A pound of water at 0° C. is heated as water to 150° C., and then converted into wet steam at the same temperature, with ($p = 69{\cdot}21$ lbs. per square inch, 6·168 cub. ft. per pound) 20 per cent. of water in it. Find its intrinsic energy and its entropy. (Bd. of Ed., Stage II., 1899.)

Ans. intrinsic energy = 928·6 B.T.U. or 516° C.; entropy = 1·3837.

25. Using the following information, draw a $\theta\phi$ diagram for water and steam:—

t° C.	p.	Entropy of 1 lb. of water.	Entropy of 1 lb. of steam.	Volume in cubic feet of 1 lb. of steam.
100°	14·7	0·313	1·749	26·43
150°	69·2	0·441	1·623	6·168
200°	226	0·556	1·536	2·031

State the amount of heat that is represented by 1 sq. in. of area of your diagram. In the expansion of 1 lb. of stuff the following pressures and volumes are given:—

p	226	69·2	14·7
v	1·70	5·56	26·1

Mark these three points on the $\theta\phi$ diagram. How much heat is given to the stuff during this expansion? (Bd. of Ed., Stage III., 1905.)

Ans. 13·2 pound-Centigrade units.

26. What do you understand by the terms "wet steam"; "dry saturated steam"; "superheated steam"? Calculate the quantity of heat to form 1 lb. of steam at 100 lbs. per square inch (temperature, 164° C.) from water at 30° C.:—

(*a*) when its dryness factor is 0·9;
(*b*) when it is dry and saturated;
(*c*) when it is superheated at constant pressure to 300° C., assuming the mean specific heat to be 0·525.

Mark on the temperature-entropy diagram the point corresponding to 1 lb. of steam with a dryness factor of 0·9, and cross-hatch the area representing the heat added after the water passes the temperature 70° C.

(Bd. of Ed., 1914, Lower.)

Answer.—The formulæ for the total heat and latent heat of 1 lb. of steam in pound-Centigrade units are—

Total heat $= 606{\cdot}5 + 0{\cdot}305t^\circ$ (saturated steam)
Latent heat $= 606{\cdot}5 - 0{\cdot}695t^\circ$
Total heat $= 606{\cdot}5 + 0{\cdot}305t^\circ + \sigma(t_s - t)$ (superheated steam)

where t = temperature of the steam corresponding to the pressure, and t_s is the

actual temperature of the steam. The numerical answers are; wet steam, 577·2 C.H.U.; dry steam, 626·5 C.H.U.; superheated steam, 697·9 C.H.U.

27. Dry steam at a pressure of 160 lbs. per square inch absolute, expands adiabatically to a pressure of 15 lbs. per square inch absolute. Find from the temperature-entropy chart the dryness of the steam after expansion and the work done per pound of steam, assuming the Rankine cycle is followed between these limits of pressure. If the expansion can be represented by the equation PV^n = constant, find the value of n for adiabatic expansion. (London B.Sc., 1911.)

Answer.—The dryness after expansion from the $t - \phi$ chart = 0·868

Work per pound of steam = 135000 ft.-lbs.

To find the index n select two points on the expansion line, and note the pressure and volume at each point.

$$P_1 = 160 \text{ lbs.}; \quad V_1 = 2\,83 \text{ cub. ft.}$$
$$V_2 = 20; \quad P_2 = 17{\cdot}4 \text{ lbs.}$$
$$\therefore 160 \times 2{\cdot}83^n = 17{\cdot}4 \times 20^n$$

$$\text{Taking logs,} \quad n = \frac{\log 160 - \log 17{\cdot}4}{\log 20 - \log 2{\cdot}83} = \frac{2\,204 - 1{\cdot}2015}{1{\cdot}3010 - 0{\cdot}4518}$$

$$\text{and} \quad n = 1{\cdot}134$$

28. Define entropy, and prove that the change in the entropy ϕ when water is raised in temperature from T_2 to T_1 and then completely evaporated is expressed by—

$$\phi = \log_e \frac{T_1}{T_2} + \frac{L_1}{T_1}$$

where L_1 is the latent heat at T_1.

Calculate the change in the value of ϕ when water at 72° F. (40° C.) is raised to 392° F. (200° C.) and evaporated; L = 841·5 B.Th.U. (467·5 C.H.U.). (Sheff. Univ.) *Ans.* Increase of entropy = 1·459.

29. Steam 10 per cent. wet, at a pressure of 105 lbs. per square inch absolute, is expanded adiabatically to 20 lbs. per square inch absolute. Find the wetness at the end of expansion, and find the weight of steam condensed per pound of steam used. Find also the heat per pound contained in the steam after expansion. Use the following data:—

Press. lbs. per sq. in. abs.	Temp. °F.	Entropy of 1 lb. of water.	Total entropy of 1 lb. of steam.
105	331	0·480	1·605
20	227·8	0·337	1·735

(Sheff. Univ., 1914.)

Ans. Wetness after expansion = 17·38 per cent.; weight of steam condensed per pound = 0·074 lb.; heat in steam after expansion = 990·3 B.Th.U.

30. In a jacketed steam-engine 20 per cent of the steam admitted to the cylinder is initially condensed; and during the expansion process one half of the heat transmitted to the cylinder walls is returned to the steam in the cylinder at a uniform rate as the temperature falls. Find the dryness fraction at release.

Initial pressure (absolute)	150 lbs. sq. inch.
Initial temperature	358·5° F. (181·4° C.).
Release pressure (absolute)	40 lbs. sq. inch.
Release temperature	267·3° F. (130·4° C.).

Illustrate your answer by showing what takes place on an entropy-temperature diagram. (London B.Sc. Eng., 1913.) *Ans.* 84·2 per cent.

31. One pound of wet steam expands from an initial pressure of 100 lbs. per square inch absolute to a pressure of 30 lbs. per square inch absolute, at which pressure it is found to be dry and saturated. Find the quantity of heat received

or rejected during expansion, assuming that the equation to the expansion curve is $PV = a$ constant; and find the initial dryness fraction of the steam. (Bd. of Ed., Higher, 1913.)

Ans. Dryness before expansion = 92·9 per cent.; heat added = 133 B.Th.U. per pound.

32. Use the temperature-entropy diagram to find to what temperature steam must be superheated so that after adiabatic expansion from 50 lbs. per square inch absolute to 10 lbs. per square inch absolute the steam shall be dry and saturated. Find the increase in the efficiency of a Rankine engine using steam in this way (namely, by superheating to just the extent required to cause the steam to be dry at the end of expansion) compared with a second Rankine engine working between the same limits of pressure but with no superheating, so that the steam is dry and saturated when expansion begins. (Bd. of Ed., Higher, 1913.)

Ans. Temperature before expansion, 467° F.; efficiency of Rankine cycle (i) with saturated steam, 11·53 per cent., (ii) with superheated steam, 12·35 per cent.

IV. THE SLIDE VALVE.

1. Prove the correctness of the Zeuner valve diagram.

A valve has an outside lap of 1 in., inside lap of 0·3 in. It is worked by a gear, giving in two positions the following values of the half-travel and advance:—

Half-travel	3·12″	2·12″
Advance	30°	51°

Find the two probable indicator diagrams, neglecting shortness of connecting-rod. Take any initial and back pressures you please. (Bd. of Ed., Stage II., 1900.)

Proof.—Let OC (Fig. 481) be any position of the crank making an angle α with the centre line of the engine. Let OE be the position of the eccentric at the same instant, and be made equal to half the valve-travel. If EF be drawn at right angles to the centre line, OF is the travel of the valve from its mid-position, neglecting the angularity of the eccentric rod. Draw OD perpendicular to OC; then EOD is the angle of advance. In the Zeuner diagram, draw AB equal to half the travel of the valve and making an angle θ equal to angle of advance with AM. Let AH be the position of the crank, making an angle α with the centre line, and cutting the small circle in G. It is required to prove AG = OF.

$\alpha + \theta +$ angle EOF $= 90°$
$\alpha + \theta +$ angle GAB $= 90°$
$\therefore$ angle EOF = angle GAB
Also angle EFO = angle AGB, both being right angles
and OE = AB
$\therefore$ the triangles EFO and AGB are equal
$\therefore$ AG = OF = travel of the valve from its mid-position when the crank makes an angle α with the centre line

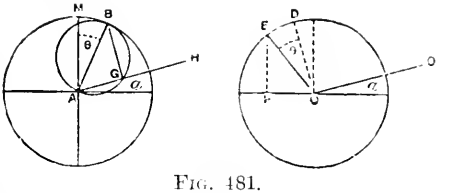

FIG. 481.

2. Having given the laps and the travel of a slide-valve and the angular advance of the eccentric, show how to find the position of the piston for each event in the steam distribution in both strokes, the ratio of length between the connecting-rod and crank being known. (Inst. C.E., Feb., 1898.)

3. The length of a crank is 14 in., the slide-valve has half-travel of $2\frac{1}{4}$ in., its lap is $1\frac{1}{2}$ in., and its lead $\frac{1}{8}$ in. At what distance from the end of the stroke will the piston be when the steam is cut off if the obliquity of the connecting-rod is neglected? Prove that the Zeuner diagram gives correct answers when the motions are simple harmonic. (Inst. C.E., Feb., 1899.) *Ans.* 11·2 in.

4. Describe with sketches a piston slide-valve, showing its seat and the cylinder ports. (Bd. of Ed., Stage II., 1900.)

5. Show the position of a slide-valve at the beginning of the stroke of an engine. A slide-valve has half-travel 2·10 in., advance 40°, lap 1 in., inside lap 0·3 in.: draw a possible indicator diagram. Prove your valve diagram to be correct. (Bd. of Ed., Stage II., 1901.) *Ans.* Cut-off, 0·68; lead, $\frac{11}{32}$ in.

6. Sketch a simple slide-valve, showing cylinder ports and no more of the cylinder; show the valve in its mid-position. Show in dotted lines the position of the valve when the piston has just begun its stroke. What do we mean by outside lap of a valve, inside lap, advance, and half-travel? The half-travel is 3·36 in., advance 42°. What simple diagram enables us to find the distance of the valve from its mid-stroke for any position of the main crank? Prove it correct.

Having such a diagram, we obtain the openings of the port to steam or exhaust by subtracting the outside or inside lap: explain how this occurs. (Bd. of Ed., Stage III., 1903.)

7. Given the travel and advance of a valve, show how we find graphically, for any position of the main crank, the distance of the valve from the middle of its stroke. Prove your method to be correct. (Bd. of Ed., Stage II., 1904.)

8. A slide-valve has a half-travel of 3 in., and its advance is 55°. Make a diagram showing the position of the valve for any position of the main crank of the engine. Prove yourself correct. (Bd. of Ed., Stage II., 1905.)

9. Prove the truth of the Zeuner method of showing the displacement of a slide-valve for any position of the crank. Half-travel 2 in., advance 30°, lap $\frac{3}{4}$ in., inside lap 0·2 in.: draw the probable indicator diagram, using any initial and back pressures you please. Measure and write down the positions of the point of cut-off and of the commencement of the exhaust and compression. (Bd. of Ed., 1899.)

Ans. Cut-off, 0·805; exhaust, 0·95; compression, 0·91.

10. Make a sketch of a Stephenson link motion, and say what are its advantages and disadvantages.

Show by the Zeuner diagram how the points of admission, cut-off, exhaust, and compression are affected by notching up the link.

11. In a Meyer valve gear the travel of the main valve is 4 in., and the angle of advance 22½°. The travel of the expansion valve is 4 in., and the angle of advance is 90°. Find the distances from the edge of the expansion valve to the edge of the main valve to cut off the steam at 0·2 and 0·5 of the stroke.

Ans. At 0·2, distance = $\frac{3}{4}$ in.; at 0·5, $1\frac{7}{8}$ in.

12. Find the distance from the edge of the expansion valve to the edge of the main valve to cut off steam at 0·4 of the stroke. Travel of expansion valve 4 in., and advance 90°; travel of main valve 3½ in., advance 30°. Find lap of main valve to cut off at 0·8 of the stroke. *Ans.* Distance, 1¼ in.; lap, $\frac{11}{16}$ in.

13. Sketch the steam-chest and cylinder ports of an engine fitted with Meyer's variable expansion valves and gear, placing the valves in their central position. Explain clearly how the valves are worked, and how the cut-off is varied.

In an engine fitted with Meyer's adjustable expansion valves, the eccentric for the main valve is set with an angle of advance of 25°, and the eccentric for the variable expansion valve or plates is set with an angle of 82°. Both eccentrics have a throw of $2\frac{1}{8}$ in. and the main valve has $\frac{3}{16}$ in. outside lead. What is the position of the piston as measured from the commencement of its forward stroke when the main valve opens for steam, the full stroke of the engine being 36 in.? Determine also, by means of the Zeuner diagram, the distance the piston has travelled from the commencement of its stroke when the expansion valve, as set to its highest grade of expansion, cuts off steam; and how much would the expansion plates require to be moved in order to cut off steam at 0·6 of the stroke of the piston? (Bd. of Ed., Hons., 1897.)

Ans. (1) $\frac{1}{16}$ in.; (2) 3½ in.; (3) $1\frac{7}{8}$ in.

14. What are the advantages of a multiple-ported slide-valve? Sketch a double-ported valve, and explain the use of the relief or equilibrium ring.

15. Sketch and describe the piston valve, and state under what circumstances it is used.

16. The outside lap of a valve is $1\frac{3}{4}$ in., the lead is $\frac{1}{8}$ in., and the greatest opening for steam is 1½ in. What is the travel of the valve. *Ans.* 6½ in.

17. Draw a Zeuner valve diagram for a valve having $\frac{5}{8}$-in. lap, $\frac{1}{8}$-in. lead, $\frac{1}{16}$-in. negative lap, and mark the points of admission, cut-off, release, and compression for a 3-in. travel and a 2-in. travel of the valve respectively.

18. The outside lap of a slide-valve is $\frac{3}{4}$ in., the lead $\frac{1}{4}$ in., and the maximum opening of the steam port for the admission of steam is $1\frac{1}{4}$ in. Find the eccentricity and the angle of advance of the eccentric. Give such sketches as will show the crank and crank-shaft with the eccentric fixed in correct relative position for forward running; indicate on the sketch the eccentricity and angle of advance as found above.

19. A valve has a half-travel of 3 in., advance 35°, lap $1\frac{1}{4}$ in., inside lap $\frac{1}{4}$ in. Draw a possible indicator diagram. Prove your valve diagram to be correct. (Bd. of Ed., 1902.)

20. What is meant by the "angle of advance" of an eccentric? How would you find the angle of advance, having given the lap and lead of a valve?

21. Prove the truth of the Zeuner method of showing the displacement of a slide-valve for any position of the crank.

Half-travel 2 in., advance 36°, lap 0·75 in., inside lap 0·2 in.; draw the probable indicator diagram, using any initial and back pressures you please. Measure and write down the positions of the point of cut-off, and of the commencement of exhaust and of compression. (Bd. of Ed., Stage II., 1899.)

Ans. Cut-off, 0·8 in.; exhaust, 0·95 in.; compression, 0·91 in.

22. A horizontal engine is fitted with the ordinary slide-valve and a single eccentric giving a fixed cut-off at, say, three-quarters of the stroke. State clearly and show by sketches the alterations in the parts that would be necessary in order that the cut-off should be altered so as to take place at two-fifths of the stroke. (Bd. of Ed., Stage II., 1899.)

23. Sketch a piston valve in its mid-position, showing both the valve and the steam ports in section. Steam is to be admitted on the inside of the valve. The valve is assumed to be driven by a simple eccentric gear. Find the angular advance, the eccentric radius, and the steam lap, so that cut-off may take place at 60 per cent. of the stroke, that the maximum opening for steam is 2", and that the lead is $\frac{1}{8}$". Neglect the obliquity of the connecting rod. (Bd. of Ed., 1912.)

Answer.—The angle of advance is 220°, or the eccentric is 220 + 90° ahead of the crank; eccentric radius, 5·28 in.; steam lap, 3·28 in.

Walschaert Valve Gear.

This is a radial valve gear and is similar in principle to the Joy, Hackworth, and other radial gears. Radial valve gears like link motions allow of ready reversal and change of cut-off point. This gear is largely used in locomotives.

Fig. 482 illustrates the principle of the gear. A lever VB has one end B connected to the crosshead by a link AB, the other end V being connected to the valve. A point F between B and F is connected to a link ED which oscillates about a centre G. The oscillation of the link is produced by a small crank OC and rod CD. The position of the block R in the link can be readily changed by the rod H and the levers shown. When R is raised above the centre G of the link, the engine is reversed.

Radial valve gears may be considered to consist of two cranks attached to a lever by connecting rods, one point in the lever being connected to the valve rod. One of the cranks always makes 90° with the engine crank, and the other crank is always either 0° or 180° ahead of the engine crank. In the Walschaert gear the 180° degree crank is obtained by placing the point V beyond the point F, so that the point V always moves in the opposite direction to the crosshead, if F is considered as a fixed point. The 90° crank is obtained by placing an eccentric or some equivalent device at an angle of 90° with the engine crank. The lever VFP thus has the lower end B controlled by a 180° crank and another point F controlled by a 90° crank. The point V, which moves the valve, is placed beyond F.

The gear may be first examined by considering the block R to be in the centre of the link; then the oscillation of the link by the 90° crank will not move either

the block R or the point F. Thus the motion of V will depend only on the movement of the crosshead and the ratio of VF to FB. The point F is selected so that the half-travel given to F is equal to the sum of the lap and the lead. When the crank is on a dead centre, the point B will be in its extreme position, and assuming the block R is in the centre of the link, then the point V will have moved the valve a distance equal to the lap and the lead from its mid-position, and the port will be open an amount equal to the lead.

When the crank is on a dead centre, the 90° crank will be vertical and the link will also be vertical and be in its mid-position. As the radius of the link ED

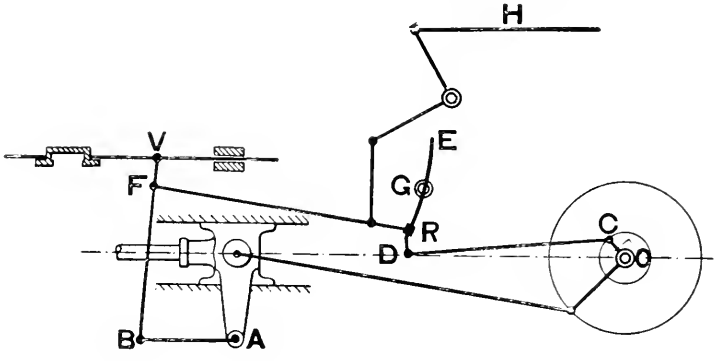

FIG. 482.

is equal to FR, the block R may be moved from one end of the link to the other without changing the position of the point F or the point V. Hence for all positions of the block in the link the valve is in the same position when the crank is on a dead centre, or *the lead is constant.*

The movement given to the block R by the 90° crank depends upon the radius OC and the ratio of GR to GD. Considering B to be stationary, the movement of the point V is greater than the movement of R by the ratio $\frac{VB}{FB}$.

An equivalent eccentric and its angle of advance may be obtained which will give to the valve a similar motion to that given by the gear for any position of the block in the link. Either a graphical construction or a formula may be used to find the equivalent eccentric and its angle of advance.

A first approximation may be obtained by neglecting the obliquity of the connecting rod and eccentric rod, and considering the motion to be simple harmonic motion.

Let the engine crank move through an angle θ, measured from the dead centre position; then the displacement of the crosshead and of the point B from their central positions is $r_1 \cos\theta$ where r_1 is the length of the engine crank. The displacement of V from its central position due to the 180° crank will therefore be $\frac{VF}{BF} r_1 \cos\theta = A \cos\theta$, where $A = \frac{VF}{BF} r_1$

Again, the displacement of D from its central position due to the movement of the 90° crank is $r_2 \sin\theta$ where r_2 is the radius of the 90° crank. The displacement of R from its central position will be $\frac{GR}{GD} r_2 \sin\theta$. The displacement of V from its central position will be $\frac{VB}{FB} \cdot \frac{GR}{GD} r_2 \sin\theta = B \sin\theta$, where $B = \frac{VB}{FB} \cdot \frac{GR}{GD} r_2$

Hence the total displacement of the valve from its central position

$$= y = A \cos\theta + B \sin\theta.$$

The value of y is a maximum when $\frac{dy}{d\theta} = 0$.

$\therefore$ differentiating and equating to zero—

$$-A \sin\theta + B \cos\theta = 0$$

$$\text{and } \tan\theta = \frac{B}{A}$$

$\therefore$ angle of advance $= 90 - \theta°$ (see Fig. 483).

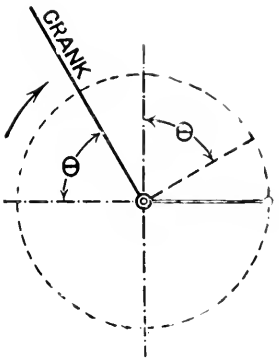

Fig. 483.

The 180° crank is $= A$, and the 90° crank $= B$

$\therefore$ the equivalent eccentric $= OE = \sqrt{A^2 + B^2}$

from which it will also be seen (Fig. 484) that cotan

$$\phi = \frac{B}{A}$$

The value A of the 180° crank is fixed in this gear, but the value of B may be altered by moving the block R in the link. As B is reduced in value, it can be seen (Fig. 484) that the angle of advance ϕ of the equivalent eccentric becomes greater. When $B = 0$, that is, the block, is in the centre of the link, $\phi = 90°$. When the block R is moved above the central position, B becomes negative and the engine is reversed.

The advantages claimed for this gear are—

1. Good and uniform distribution of steam at various cut-offs and on both sides of the piston.
2. Simple and easily repaired mechanism.
3. Very convenient when the valves are on the top or underneath the cylinder.

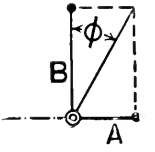

Fig. 484.

24. Make an outline sketch of either a link motion or a radial valve gear. State briefly the special advantages of the type selected. (Inst. M.E., April, 1914.)

25. Sketch in outline the Walschaert valve gear as used in locomotives. In the Walschaert gear a lever ABC is used. The lower end A of the lever receives its motion from the crosshead and moves a horizontal distance of 12 in. The upper end C works the slide valve. The point B between A and C receives its motion from the curved link. The curved link oscillates 16 degrees on each side of its mean position, and the block which slides in the link is 3 in. from its central position. Find the eccentricity of a single eccentric and its angle of advance which would give the same motion to the valve as is obtained by the gear.

Ratio AB : BC :: 8 : 1.

(Sheff. Univ.)

Ans. Eccentricity 1·25, in.; angle of advance, 38°.

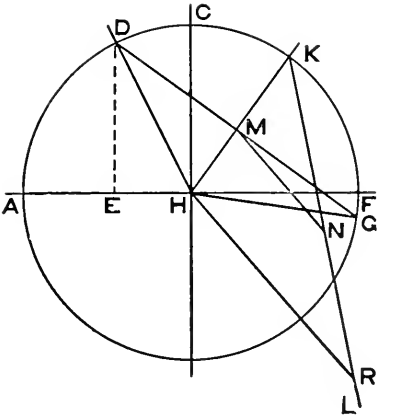

Fig. 485.

Valve Diagram Problems.

Problem 1.—Given the point of cut-off, the *angle* of lead, and the greatest opening to steam, find the steam lap, angle of advance, and the travel of the valve.

Draw any circle, ACF (Fig. 485), and find the position of the crank HD at

cut-off by selecting the point E so that $\frac{EF}{AF}$ is the fraction of the stroke at which cut-off takes place. Draw ED perpendicular to AF to meet the circle ACB at D. Draw HG making the angle GHF = angle of lead. Bisect the angle DHG by HK and join DG, which will be perpendicular to HK.

Then HM is to MK in the proportion of the required lap to the port opening, and the determination of the lap is a matter of simple proportion. Draw KL making any angle with HK and make KN = the given greatest port opening. Join MN and draw HR parallel to MN. Then CHK is the required angle of advance; KR is the half-travel of the valve, and RN the steam lap.

26. Cut-off takes place at $\frac{3}{4}$ of the stroke; greatest opening to steam is $1\frac{1}{4}$ in.; angle of lead, 4°. Find the angle of advance, steam lap, and travel of the valve.

Ans. Travel, 6·2 in.; lap, 1·85 in.; angle of advance, 41°.

Problem 2.—Given the point of cut-off, the lead of the valve and the greatest opening to steam, find the angle of advance, the travel of the valve, and the steam lap.

Draw any circle ACB and find the crank position HD at cut-off as in *Problem* 1. Draw GK parallel to AF, and at a distance from it equal to the given lead. With centre H draw an arc of a circle MN with a radius = given greatest opening to steam. Find a circle having a centre L to touch the arc MN and the lines HD and GK. The centre L is found by trial.

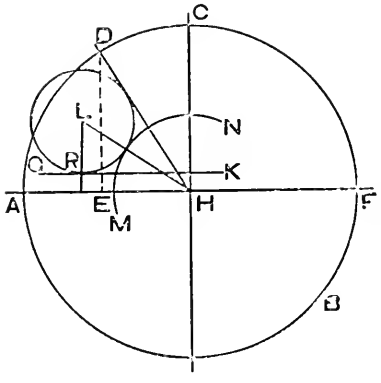

FIG. 486.

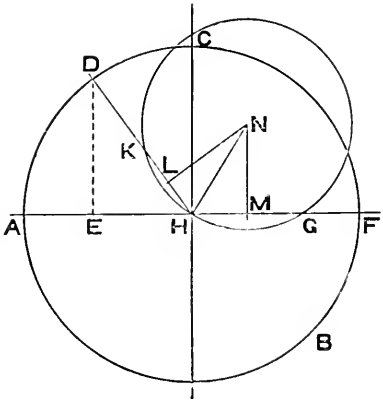

FIG. 487.

Then HL = the half-travel of the valve, LR = lap, and the angle LHA = the angle of advance.

27. A slide valve cuts off at 0·80 of the stroke. The lead is $\frac{1}{8}$ in. and the greatest opening to steam $1\frac{1}{2}$ in. Find the angle of advance, the half-travel, and the steam lap.

Ans. Angle of advance, $27\frac{1}{2}$°; half-travel, 5·2 in.; steam lap, 1·1 in.

Problem 3.—Given the point of cut-off, steam lap, and lead, find the travel of the valve and the angle of advance.

Draw any circle ACB (Fig. 487), and find the crank position HD at cut-off as in *Problem* 1. Make HG = lap + lead, and HK = lap. Bisect HK at L, and HG at M. Erect perpendiculars from L and M to meet at N. Then the angle CHN is the angle of advance. HN is the quarter-travel of the valve. The steam circle of the Zeuner valve diagram may be drawn with centre N and radius HN.

28. The lap of a valve is 1 in.; cut-off takes place at $\frac{3}{4}$ of the stroke; lead, $\frac{1}{8}$ inch. Find the travel of the valve and the angle of advance.

Ans. Travel of valve, 3·45 in.; angle of advance, 40°.

Problem 4.—To show the effect of the length of the connecting rod on the cut-off, assuming equal lead at both ends of the stroke.

Assuming the valve diagram to be drawn in the usual manner then, neglecting the length of the connecting rod, HD (Fig. 488) represents the crank position when cut-off takes place, and $\frac{EF}{AF}$ the fraction of the stroke at which cut-off takes place on both sides of the piston.

To find the actual positions of the piston at cut-off, produce DH to K; then with a connecting rod say four cranks long, draw arcs of circles DG and KM with radii equal to four times HD. Then the fraction of stroke at which cut-off takes place on the instroke is $\frac{FG}{AF}$, and on the outstroke $\frac{AM}{AF}$.

Similarly, the positions of the piston when release, compression, and admission commence, may be shown for both the inward and outward stroke of the piston.

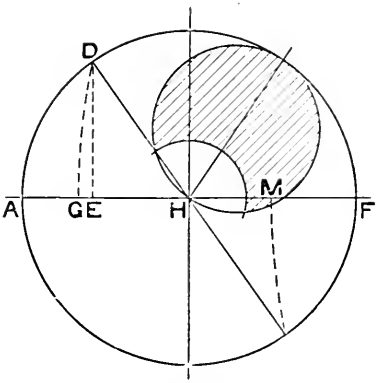

FIG. 488.

29. The travel of a slide valve is 4 in.; steam lap, $\frac{7}{8}$ in., angle of advance, 30°. Find the point of cut-off on both sides of the piston if the connecting rod is four cranks long. *Ans.* Instroke, 0·76; outstroke, 0·82.

30. A piston valve distributes steam to a cylinder by inside admission. Cut-off is to take place at 70 per cent. of the stroke. The maximum opening of the steam port during admission is to be 2 in., and the lead is to be $\frac{1}{4}$ in. Release is to take place at 97 per cent. of the stroke. Find the steam lap, the exhaust lap, the radius of the eccentric sheave and the angular advance, neglecting the effect of the obliquity of the connecting rod.

Sketch, to a suitable scale, the valve in its central position over the ports, using the following dimensions:—Steam ports, 3 in. wide; distance between the inner edges of the ports, 15 in.; width of central port, 8 in. Sketch also an end view of the crank-shaft, showing the centre line of the main crank, the centre line of the eccentric sheave radius, and mark on the sketch the angle between them. (Bd. of Ed., 1914, Higher.)

Ans. Steam lap, $2\frac{1}{2}$ in.; exhaust lap, $1\frac{3}{4}$ in. The eccentric for a valve having inside admission is set diametrically opposite to its position with outside admission. If θ is the angle of advance for outside admission, then the centre line of the eccentric is *behind* the crank an angle of $90°-\theta$. Fig. 489 shows the relative positions of the crank and the eccentric.

31. The main valve of a Meyer valve gear travels 4 in., the angle of advance being 30°; the expansion valve travels $4\frac{1}{4}$ in., the angle of advance being 90°. Find the distance from the edge of the expansion valve to the outside edge of the steam port in the main valve, so as to cut off at 0·45 of the stroke. Prove your construction. (Sheffield Univ.) *Ans.* 1·61 in.

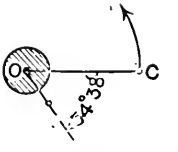

FIG. 489.

The Meyer valve and the construction of the Meyer valve diagram is explained on p. 84.

Proof of Meyer Valve Diagram.—Let OE (Fig. 490) be the half-travel of the main valve, and the angle XOE the angle of advance of the main valve eccentric. Let OE′ be the half-travel of the expansion valve, and the angle XOE′ the angle of advance of the expansion valve eccentric. Describe circles on OE and OE′ as diameters. Let OP be any position of the crank, then OB is the travel of the main valve from its central position, and OA is the travel of the expansion valve

from its central position (see proof of Zeuner valve diagram, p. 483). Therefore AB is the relative travel of the valves.

Join EE′ and draw OC equal and parallel to EE′. Describe a circle on EE′ as diameter, then the chord OD is the relative travel of the valves for the crank position OP, and is equal to AB.

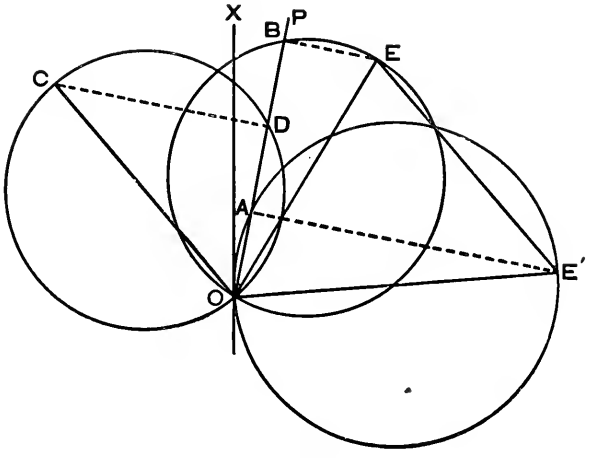

FIG. 490.

Join CD, BE, BE′. The angles at CDO, E′AO and EBO are right angles, being angles in a semicircle. Hence OD = AB, as they are the projections of equal and parallel lines OC and EE′ on OP.

V. THE INDICATOR.

1. Steam enters a cylinder at the absolute pressure 120 lbs. per square inch, and expands according to the law "pv constant." Neglect clearance and cushioning, and use the ordinary hypothetical diagram. Constant back pressure, 27 lbs. per square inch.

Take the following values of the cut-off: half stroke, quarter stroke, eighth of stroke. Find in each case the effective pressure. The area of the piston is 1 sq. ft.; stroke, 2 ft. What is the work done per stroke? How many cubic feet of indicated steam are used per stroke? What is the work done per cubic foot of steam entering the cylinder? Tabulate your answers. (Bd. of Ed., Stage II., 1903.)

Ans. M.e.p. 74·586, 44·589, 19·191; work per stroke in foot-lbs. 21,480, 12,841, 5527; work per cubic foot, in foot-lbs. 21,480, 25,683, 22,108.

2. If the effective pressure in a steam-engine cylinder is taken to be (assuming no clearance or cushioning)—

$$p_1 \frac{1 + \log_e r}{r} - p_3$$

where p_1 is the initial pressure, p_3 the back pressure, and r the ratio of cut-off, write out the work done in one stroke and the cubic feet of steam admitted for one stroke, and so find w, the work done per cubic foot of steam. If $p_1 = 120$, $p_3 = 17$, calculate w for some values of r, and plot on squared paper or in any other way you please; find r to give a maximum w. (Bd. of Ed., Stage II., 1904.)

Ans. $r = 7{\cdot}06$.

3. Steam enters a cylinder at 150 lbs. (absolute) per square inch. It is cut off at one-fourth of the stroke, and expands according to the law "pv constant."

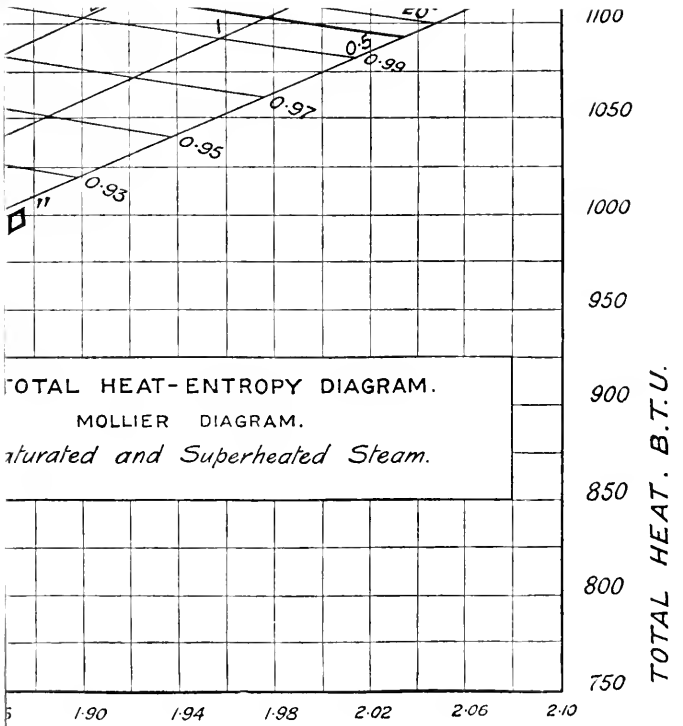

TOTAL HEAT-ENTROPY DIAGRAM.

MOLLIER DIAGRAM.

aturated and Superheated Steam.

[*To face page* 490.

PLATE V.—MOLLIER DIAGRAM.

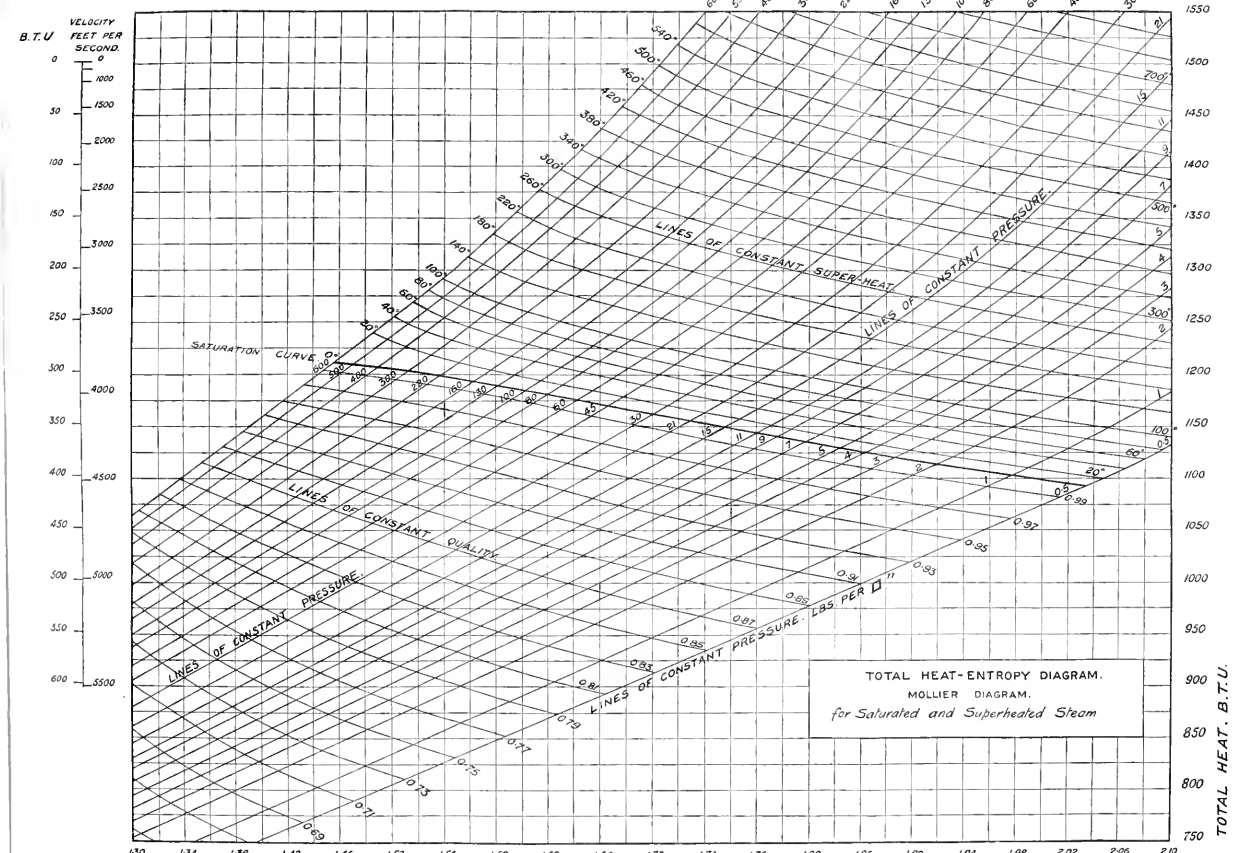

[To face page 490.

Find the average pressure (absolute) in the forward stroke. If the back pressure is 17 lbs. (absolute) per square inch, what is the average effective pressure? If the area of the cross-section of the cylinder is 126 sq. in., and the crank is 11 in. long, what work is done in one stroke? Neglecting clearance and condensation, what volume of steam enters the cylinder per stroke?

If the admitted steam has a volume of 3 cub. ft. to the pound, what is the weight of steam admitted per stroke? What work is done per pound of steam? (Bd. of Ed., Stage II., 1901.)

Ans. 89·48; 72·48; 16,740 foot-lbs.; 0·401 cub. ft.; 0·134 lb.; 124,925 foot-lbs.

4. Take a hypothetical indicator diagram—no clearance, constant back pressure 17 lbs. per square inch. Let friction of engine be represented by 10 lbs. per square inch on the piston. Expansion law pv constant; cut-off at one-third of the stroke; area of the piston, 100 sq. in.; crank 1 ft.; 200 working strokes per minute. Steam of the following initial pressures being admitted, find in each case the crank-shaft horse-power, and the weight of indicated steam per hour. Tabulate the results, and plot upon squared paper. The following information is given:—

Absolute pressure of admitted steam, pounds per square inch . . .	50	100	150
Cubic feet of 1 lb. of admitted steam	8·34	4·356	2·978

(Bd. of Ed., Stage III., 1901.)
Ans.—

Pressure of steam admitted . . .	50	100	150
Horse-power	9·66	52·04	94·41
Weight of steam indicated in pounds	666·1	1276	1865

5. Steam is admitted to the cylinder of a double-acting engine at 80 lbs. per square inch. The back pressure is 17 lbs. per square inch. The friction of the engine may be taken to be represented by a back pressure of 8 lbs. per square inch on the piston. Find the cut-off to give maximum actual work per cubic foot of steam, taking "pv constant" as the law of expansion. Neglect clearance, cushioning, and condensation. If you use a formula for the average pressure, prove it correct. (Bd. of Ed., Stage III., 1900.) *Ans.* $\frac{5}{16}$.

6. Initial pressure of steam, 180 lbs. per square inch; back pressure, 17 lbs. per square inch; cut-off at one-third of the stroke; area of piston, 112 sq. in.; and length of crank, 1 ft.: what work is done in one stroke? What is the weight of steam used in one stroke if the volume of 1 lb. of the steam is 2·51 cub. ft.? If there are 200 strokes per minute, what is the indicated horse-power, and what weight of steam is used per hour, neglecting clearance, condensation, and leakage? (Bd. of Ed., Stage II., 1900.)

Ans. 24,397 foot-lbs.; 0·206 lb.; 2472 lbs. per hour.

7. Assuming no clearance; cut-off at one-third of the stroke; expansion according to the law "pv constant"; what is the mean forward pressure as a fraction of the initial pressure? If the cross-section of the cylinder is 144 sq. in., length of stroke 2 ft., what volume of steam is used per stroke? If the back pressure is 17 lbs. per square inch, and there are 200 strokes per minute, find in the following two cases the indicated horse-power and the weight of steam used per hour. Neglect clearance, condensation, and leakage.

Initial pressure in pounds per square inch	180	100
Volume in cubic feet of initial-pressure steam per pound	2·51	4·356

Use squared paper to show the weight of steam per hour used by the engine at any power. (Bd. of Ed., Stage III., 1900.)

8. In question (7), with initial pressure 180, find the mean forward pressure during a stroke. Neglecting the shortness of the connecting-rod, find the pressure when the crank makes angles of 0°, 15°, 30°, etc., with its dead point, and find the average of these. A simple new indicator measures this last, which is a time average, instead of the true or space average: what is its percentage error? (Bd. of Ed., Stage III., 1900.)

9. Calculate the number of foot-pounds of work done per cubic foot of steam at a pressure of 120 lbs. per square inch (absolute) when expanded four times and exhausted against a back pressure of 3 lbs. per square inch (absolute) in a non-conducting cylinder having a clearance of 5 per cent. of the working volume. (The cubic foot includes the clearance volume.) You may assume hyperbolic expansion, and that there is no compression, and, further, that release takes place at the end of the stroke. (Inst. C.E., Oct., 1901.) *Ans.* 36,053 foot-lbs.

10. Use the common hypothetic indicator diagram; expansion curve "*pv* constant;" no clearance or cushioning.

A piston is 1 sq. ft. in area, stroke 2 ft., 200 strokes per minute: find the indicated horse-power if the initial pressure of the steam is 120 lbs. per square inch. Take two cases, one in which the cut-off is at half-stroke, the other in which the cut-off is at one-fifth of the stroke. This steam is initially 3·67 cub. ft. per pound: find in each case the weight of steam used per hour.

It has been found by observation that in the factory driven by the engine the number of yards of stuff made per hour is $7{\cdot}81 - 320$, where I is the indicated horse-power. Find the number of yards for each of your two cases. Tabulate your answers. State also the number of yards per pound of steam in each of the cases. (Bd. of Ed., Stage III., 1903.)

Ans.—

Cut-off.	Mean pressure	I.H.P.	Steam per hour.	Yards per hour.	Yards per pound of steam.
$\frac{1}{2}$	101·58	177·3	3270	1063	0·3251
$\frac{1}{5}$	62·316	109·2	1308	532·3	0·4070

11. Describe the construction of an indicator and how it is used. Give a sketch of a specimen indicator diagram from a steam, gas, or oil engine, and describe what each part means.

What sort of information is given to us by an indicator diagram? (Bd. of Ed., Stage II., 1903.)

12. Sketch indicator cards to show the following defects in a steam-engine: (*a*) excessive compression; (*b*) too early cut-off; (*c*) too early release; (*d*) early cut-off, valve reopens at $\frac{3}{4}$ stroke; (*e*) indicator drum working against the stop. (C. & G., Hons., 1892.)

13. Explain how to find the mean pressure of an indicator diagram containing loops.

14. Describe Richards's indicator, and point out precisely the mechanism by which the pencil is actuated, giving the reason for the special construction.

The barrel of such an indicator is 2 in. in diameter, and it vibrates through three-fourths of a revolution. The area of the diagram is $3\frac{3}{4}$ sq. in., and the motion of the pencil is three times that of the indicator piston. Taking the mean pressure of steam to be $17\frac{1}{2}$ lbs. per square inch, find what force corresponds to a motion of 1 in. of the springs. (Bd. of Ed., Stage II., 1892.) *Ans.* 67·5 lbs.

15. Sketch and describe the action of an indicator for measuring the power of an engine. If the scale of an indicator is 60 lbs. to the inch, the area of the diagram 3·98 sq. in., and its greatest length parallel to the atmospheric line $2\frac{1}{4}$ in., the crank of the engine being 13 in., the diameter of the cylinder 15 in., and the number of revolutions per minute 80, find the I.H.P. (Bd. of Ed., Stage II., 1894.)

Ans. 197·1.

16. What data are required for calculating the I.H.P. of a steam engine? If the diameter of the cylinder and the stroke of the piston be given, and you had charge of an engine, how would you proceed to find the other data required to determine the I.H.P.? Describe with the aid of a sketch the construction and action of the indicator which you adopt. (Bd. of Ed., Stage II., 1895.)

17. Describe with sketches the construction of a steam-engine indicator. (Bd. of Ed., Stage II., 1905.)

18. A single-cylinder double-acting condensing engine has its cylinder efficiently lagged, and receives steam at an absolute pressure of 90 lbs. per square inch; the cut-off takes place at one-sixth stroke, and the back pressure is 3 lbs. absolute. What must be the diameter of the cylinder and stroke of the engine in order that it may indicate 2500 horse-power when running at 50 revolutions per minute? The stroke of the engine is twice the diameter of the cylinder. Hyp. log 6 = 1·791

Ans. Diameter, 54·5 in.; stroke, 109 in.

19. Describe completely the process of estimation of the horse-power of an engine by the use of an indicator, and by means of other necessary observations.

What must be the mean intensity of pressure per square inch if, for each cubic foot swept through by the piston per second, 15 H.P. are developed? (Inst. C.E., 1905.) *Ans.* 57·3 lbs. per square inch.

20. Steam enters a cylinder at 50 lbs. per square inch (absolute), is cut off in one case at one-fifth, in another case at half the stroke. Find in each case by construction (you may use a formula if you prove it correct) the average pressure during the stroke, the back pressure being 17 lbs. per square inch; find the indicated work per cubic foot of steam in the two cases. What objections are there to very early cut-off? (Bd. of Ed., Stage II., 1899.)

Ans. 6480 foot-lbs. and 7200 foot-lbs.

21. The mean pressure of the usual hypothetical diagram is—

$$\frac{p_1(1+\log_e r)}{r} - p_2$$

where p_1 is the initial pressure, p_2 the back pressure, and r is the ratio of expansion. Obtain this expression, and prove that the maximum work per cubic foot of steam is obtained when $r = \frac{p_1}{p_2}$, neglecting all losses. (Sheffield Univ.)

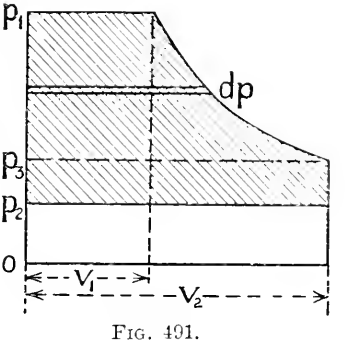

FIG. 491.

Answer.—Let the cross-hatched area in Fig. 491 represent the hypothetical diagram, the expansion curve following the law PV = constant.

Take a narrow strip dp.

The area of this strip $= v \,.\, dp$.

Total area between the limits p_1 and $p_3 = \int_{p_3}^{p_1} v\,dp = p_1 v_1 \int_{p_3}^{p_1} \frac{dp}{p}$ since $v = \frac{p_1 v_1}{p}$

$$p_1 v_1 \int_{p_3}^{p_1} \frac{dp}{p} = p_1 v_1 \log_e \frac{p_1}{p_3} = p_1 v_1 \log_e r;$$

where $r = \frac{p_1}{p_3}$

$$\text{Total area of diagram} = p_1 v_1 \log_e r + v_2(p_3 - p_2)$$

$$\text{mean pressure or average height} = \frac{p_1 v_1 \log_e r + v_2(p_3 - p_2)}{v_2}$$

$$= \frac{p_1 \log_e r}{\frac{v_2}{v_1}} + (p_3 - p_2)$$

$$\text{Also } p_3 = \frac{p_1}{r} \quad \text{and} \quad \frac{v_2}{v_1} = r$$

$$\therefore \text{ mean pressure} = \frac{p_1(1+\log_e r)}{r} - p_2$$

Let P_m = mean pressure per square foot.
V = volume of the cylinder in cubic feet.
A = area of piston in square feet.
L = length of stroke in feet.

$$\text{Work per stroke} = P_m \times A \times L.$$

$$\text{steam used per stroke with } r \text{ expansion} = \frac{A \times L}{r}$$

$$\therefore \text{ work per cubic foot of steam} = \frac{P_m \times A \times L}{\frac{A \times L}{r}} = P_m \times r$$

Substituting the value of the mean pressure—

$$\text{Work per cubic foot} = r\left(\frac{p_1(1 + \log_e r)}{r}\right) - p_2$$
$$= p_1(1 + \log_e r) - rp_2$$

To find when this expression is a maximum, differentiate and equate to zero.

$$\text{Then } \frac{p_1}{r} - p_2 = 0$$

$$\text{and } r = \frac{p_1}{p_2}$$

22. The steam cylinder of a pump is fitted with an ordinary D slide valve. The eccentric radius is $2\frac{1}{4}$ in., the angular advance is 40°, and the outside and inside laps are respectively $1\frac{3}{8}$ in. and $\frac{1}{2}$ in.

The cylinder is supplied with steam at 45 lbs. per square inch gauge pressure, and the back pressure is 3 lbs. gauge pressure. Assuming that the law both for expansion and compression is PV = a constant, draw the indicator diagram for the cylinder, making the length of the diagram 3 in., and using a pressure scale 30 lbs. per square inch per inch. Cylinder clearance, 15 per cent. of effective volume; atmospheric pressure, 15 lbs. per square inch.

[Neglect the obliquity of the connecting rods.] (Bd. of Ed., 1914, Lower.)

23. Find the mean pressure for the following ideal indicator card:—

Admission at constant pressure, 90 lbs per square inch gauge; cut-off at 0·35 of the stroke; release at end of stroke; exhaust at 3 lbs. per square inch gauge; compression so that at end of stroke the initial pressure is reached. Atmospheric pressure 15 lbs. per square inch. Expansion and compression curves, pv = constant; clearance, 5 per cent. (Sheffield Univ., 1914.)

Ans. 54 lbs. per square inch.

VI. QUALITY OF STEAM IN THE CYLINDER.

1. We endeavour to prevent condensation in the cylinder of a steam-engine (*a*) by a separator, (*b*) by superheating, (*c*) by drainage from the cylinder, (*d*) by steam-jacketing, (*e*) by high speed. Explain how each of these methods tends to effect our object. (Bd. of Ed., Stage II., 1901.)

2. Why is even a small quantity of water harmful in a steam-cylinder? How do we try to prevent condensation in a cylinder? If any of the methods serves some other good purpose, state it. Prove that drainage must be good. (Bd. of Ed., Stage II., 1905.)

3. Without giving the mathematical investigation, state what is the result of our study of the cause of the initial condensation in a cylinder. Has it been confirmed by experiment? What is known about steam missing through leakage past valves? (Bd. of Ed., Stage III., 1900.)

4. Explain why condensation generally occurs as steam enters an engine-cylinder, and show that it is a cause of loss. Discuss the various methods which may be employed to reduce cylinder condensation. (Inst. C.E., Oct., 1892.)

5. State in a general manner how initial condensation in a steam-engine cylinder is affected by (*a*) variable rates of expansion; (*b*) roughness and extent

of the surface of the piston-head and the inside surface of the cylinder cover; (*c*) steam-jacketing; (*d*) superheating; (*e*) speed of running (*i.e.* number of strokes per minute); (*f*) compounding. (Inst. C.E., Oct., 1901.)

6. Sketch and describe an apparatus for drying steam before it enters the cylinder.

7. How would you determine the percentage dryness of steam at cut-off? What data would you require?

8. Show by an example how, given the clearance volume and volume swept by the piston, and also the indicator card for a steam-engine, you can calculate at any point of the stroke after cut-off, the actual volume and weight of the steam in the cylinder. What information about the working of the engine does this give you? (C. & G., Hons., 1896.)

9. Explain how the weight of steam present in an engine cylinder at any part of the expansion process can be measured from the indicator card. (C. & G., Hons., 1894.)

10. Describe the method of applying the saturation curve to the indicator diagram.

11. Sketch an indicator diagram such as might be expected from a non-condensing engine with a slide-valve. If the weight of water present during cushioning is known, and the feed-water per hour is also known, show how we find how much condensation or evaporation occurs during the expansion. (Bd. of Ed., Stage II., 1900.)

12. Having given an indicator diagram from a steam-engine, and full particulars as to the scale of the diagram and the dimensions of the engine, show how you would calculate the weight of steam present in the cylinder at any convenient point in the expansion process. (Inst. C.E., Oct., 1901.)

13. Given indicator cards for a single-cylinder steam-engine and all necessary data, explain carefully how you would estimate the dryness of the steam at any point in the expansion, stating clearly any assumptions involved in the process. (Inst. C.E., 1905.)

14. The cylinder volume of an engine at cut-off is exactly a cubic foot. Calculate what weight of steam is theoretically shut in the cylinder at cut-off—

(i) If the engine is supplied with dry saturated steam at 100 lbs. per square inch absolute pressure (corresponding temperature, 164° C.).

(ii) If the steam is superheated at constant pressure to 200° C., assuming that the volume of superheated steam is proportional to its absolute temperature.

Why would the cylinder feed per stroke in the actual engine largely exceed these weights; and would the excess be greater in the first or the second case? (Bd. of Ed., 1914, Lower.)

Ans. In the absence of steam tables, the volume of a pound of steam may be calculated from the formula—

$$pu^{1\cdot0646} = 479$$

where p is the pressure in pounds per square inch, and u is the cubic feet per pound. Using this formula, the answers are (i) dry steam, 0·2296 lb.; (ii) superheated steam, 0·2121 lb.

15. From the following particulars determine the dryness of the steam at $\frac{3}{8}$ of the stroke, assuming the cut-off to be at half-stroke:—

Volume of cylinder, cub. ft.	4·6
Clearance, per cent.	5
Pressure of steam at $\frac{3}{8}$ stroke, lbs. per square inch absolute	60
Volume of 1 lb. of steam at 60 lbs. per square inch absolute, cub. ft.	7·03
Pressure at a point 0·8 of the return stroke on the compression curve, lbs. per square inch absolute	19
Volume of 1 lb. of steam at 19 lbs. per square inch absolute, cub. ft.	20·8
Revolutions per minute	100
Condensed steam per hour, lbs.	5920

What assumptions do you make in working out the dryness of the steam? (London B.Sc., 1911.)

Ans. Volume of steam in cylinder at cut-off $= \frac{5}{8} \times 4{\cdot}6 + 0{\cdot}23$
$= 3{\cdot}105$ cub. ft.

$$\text{weight of steam present at cut-off} = \frac{3{\cdot}105}{7{\cdot}17} = 0{\cdot}4331 \text{ lb.}$$

volume of steam during compression at 19 lbs. pressure $= \frac{3}{19} \times 4{\cdot}6 + 0{\cdot}23$
$= 1{\cdot}15$ cub. ft.

$$\text{weight of steam in cylinder during compression} = \frac{1{\cdot}15}{21{\cdot}07} = 0{\cdot}0546 \text{ lb.}$$

$$\text{steam used per stroke} = \frac{5920}{200 \times 60} = 0{\cdot}4933 \text{ lb.}$$

$$\therefore \text{ dryness fraction} = \frac{0{\cdot}4331}{0{\cdot}4933 + 0{\cdot}0546} = 0{\cdot}79$$

It is assumed that the steam is dry steam when the exhaust closes, and that there is no leakage of steam past the valve.

16. Find the dryness of the steam after cut-off at three-quarters of the stroke from the following particulars of an engine trial, assuming no leakage:—

Condensed steam per hour in pounds	4608
Revolutions per minute	120
Volume of cylinder, cubic feet	3·6
Clearance, per cent.	5
Pressure of steam in pounds per square inch at $\frac{3}{4}$ stroke	41·8
Volume in cubic feet of 1 lb. of steam at 41·8 lbs. pressure	10·05
Pressure of steam in pounds per square inch at 0·84 of the return stroke and commencement of compression . .	17·2
Volume in cubic feet of 1 lb. of steam at 17·2 lbs. per square inch	23·14

(Inst. C.E., October, 1913.) *Ans.* Dryness of steam, 81 per cent.

VII. COMPOUND ENGINES.

1. Explain fully how the combined indicator diagram of a triple-expansion engine is made from the three cards taken from the several cylinders. What advantages and information are derivable from the plotting of the three separate indicator cards to one scale and on one card? (Bd. of Ed., Stage II., 1899.)

2. You are given a set of cards taken from the three cylinders of a triple-compound engine. Explain what further data you would require, and how you would combine them into one diagram. How would you use the diagram you obtain to compare the amount of work actually done by the engine per stroke with the amount of work the actual steam admitted could do if expanded adiabatically down to the release pressure, and exhausted at a pressure corresponding to the actual back pressure in the engine? (C. & G., Hons., 1897.)

3. Explain the method of drawing a combined diagram for a compound engine. Take a compound engine with the following dimensions: H.P. cylinder 30 in. in diameter, L.P. cylinder 57 in. in diameter, and 36 in. stroke in both cylinders. Steam enters the H.P. cylinder at 70 lbs. absolute, cut-off in both cylinders being at half-stroke, and the back pressure in the L.P. cylinder being 4 lbs. There is a large intermediate receiver in the engine.

Construct the probable respective diagrams and combine them, using hyperbolas for the expansion curves. (Bd. of Ed., Hons., 1892.)

4. Show how to combine the indicator diagrams for a three-cylinder gas-engine with cranks at 120° apart, so as to obtain the turning moment. (Inst. C.E., Oct., 1903.)

5. Show by diagrams the effect of varying the cut-off in the H.P. cylinder, the cut-off in the L.P. cylinder being constant; also the effect of varying the cut-off in the L.P. cylinder, the cut-off in the H.P. cylinder being constant.

6. What is the receiver of a compound engine? Explain what is the influence of its volume on the diagram.

7. Find the diameters of the cylinders of a compound engine of 500 I.H.P., the

stroke being 42 in. and the revolutions 80 per minute; steam-pressure, 120 lbs. per square inch absolute: terminal pressure, 10 lbs.; back pressure, 3 lbs.

Ans. H.P. 18 in.; L.P. 34·3 in.

8. Find the diameters of the cylinders of a triple-expansion engine of 1000 I.H.P. the stroke of the piston being 54 in., and the revolutions 100 per minute. The mean pressure to be 35 lbs. per square inch referred to the L.P. cylinder.

Ans. 36·5 in., 24 in., 14 in.

9. Explain the effect of clearance volume (*a*) on the ratio of expansion; (*b*) on the steam consumption when there is no compression; (*c*) when there is compression.

10. What are the advantages of the compound engine over the single-cylinder engine of the same I.H.P. when both engines work with steam of the same initial pressure and with the same rates of expansion? Compare the maximum pressures on the crank-pins of two engines of equal stroke and each working upon a single crank, when the initial pressure of steam per square inch is in both cases 80 lbs. absolute, the total expansion 5 times, and the terminal back pressure 4 lbs. per square inch absolute. In the single-cylinder engine the piston is 20 in. in diameter, and in the compound engine the L.P. cylinder is 20 in. in diameter and the H.P. cylinder is $11\frac{1}{2}$ inches in diameter. For the comparison consider that there is no drop in pressure between the two cylinders, but that the terminal pressure in the H.P. cylinder is the same as the initial pressure in the L.P. cylinder. (Bd. of Ed., Hons., 1896.) *Ans.* 1 : 1·39.

11. Explain carefully, with sketches, how you would combine diagrams taken from the high- and low-pressure cylinders of a compound engine. (Inst. C.E., 1905.)

12. Find the diameters and suitable stroke of the two cylinders of a compound engine, so that the power developed may be 120 indicated horse-power at a piston speed of 600 ft. per minute. Ratio of cylinders (by volume) $1 : 2\frac{1}{4}$; admission pressure, 115 lbs. per square inch absolute; condenser pressure, 3 lbs. per square inch absolute; diagram factor, 0·70; cut-off in high pressure cylinder, 0·5.

Answer.—

$$\text{Mean pressure of ideal diagram} = \frac{115(1 + \log_e r)}{r} - 3$$

$$\text{number of expansions } r = \frac{1}{0{\cdot}5} \times 2\tfrac{1}{4} = 6{\cdot}5$$

$$\therefore \text{ mean pressure} = \frac{115(1 + \log_e 6{\cdot}5)}{6{\cdot}5} - 3$$

$$= 47{\cdot}77 \text{ lbs. per square inch.}$$

Actual mean pressure referred to low-pressure cylinder $= 47{\cdot}77 \times 0{\cdot}70 = 33{\cdot}44$ lbs. per square inch.

Let d_2 = diameter of low-pressure cylinder.

$$\text{Then } 120 = \frac{33{\cdot}44 \times 600 \times d_2^2 \times 3{\cdot}1416}{33000 \times 4}$$

$$\text{and } d_2^2 = 251{\cdot}3$$

$$d_2 = 15{\cdot}85 \text{ in.}$$

Let d_1 = diameter of high-pressure cylinder.

$$d_1^2 : d_2^2 :: 1 : 2\tfrac{1}{4}$$

$$\therefore d_1 = \frac{15{\cdot}85}{\sqrt{2\tfrac{1}{4}}} = 8{\cdot}792 \text{ in.}$$

Assuming a stroke of 18 in.—

$$\text{Revolutions per min.} = \frac{600}{2 \times 1\frac{1}{2}} = 200 \text{ per minute.}$$

13. In a triple expansion marine engine to develop 200 I.H.P. at a piston speed of 700 ft. per minute the volumes of the L.P., I.P., and H.P. cylinders are to be in the ratio 1 : 2·5 : 7·5. The steam chest pressure is 170 lbs. per square inch gauge, and the exhaust pressure 4 lbs. per square inch absolute. Taking a diagram factor 0·65 and the cut-off in the H.P. cylinder at 0·6 of the stroke, calculate the diameters of the cylinders and state a suitable stroke. (Sheffield Univ.)

Ans. Diameters, $22\frac{3}{4}$ in.; $39\frac{1}{2}$ in.; $62\frac{1}{4}$ in.; stroke, 42 in.

14. Determine the cylinder dimensions of a horizontal compound engine with trip gear, to develop 600 I.H.P. under the following conditions :—Pressure in steam chest, 140 lbs. per sq. in. gauge ; vacuum, 26 in. ; number of expansions, 12 ; diagram factor, 0·82 ; piston speed, 650 ft. per minute ; point of cut-off in high-pressure cylinder at one-third of stroke. Determine also the point of cut-off in the low-pressure cylinder, so that the initial loads may be approximately equal. (B.Sc. Lond., 1907.)

Ans. Diameter of H.P. cylinder = 16·6 in. ; diameter of L.P. cylinder = 33·2 in. ; cut-off in L.P. cylinder = 0·4.

VIII. SUPERHEATED STEAM.

1. Write a brief account of the use of superheated steam. An engine of 500 I.H.P., under a working pressure of 150 lbs. per square inch absolute and a feed-temperature of 80° F., uses 18 lbs. of steam per I.H.P. hour ; when the steam is superheated to 700° F., it uses 11 lbs. per I.H.P. hour ; express the saving as a percentage of the original consumption. (Inst. C.E., Oct., 1903.)

Ans. Saving is 30·1 per cent.

2. Sketch an entropy-temperature diagram for water and steam, and show how you would indicate upon it : (*a*) adiabatic expansion of steam having an initial wetness of 10 per cent., and show how you would obtain the wetness fraction after it had expanded down to a given temperature ; (*b*) superheating of the steam, and indicate the temperature at which it would become saturated if it were adiabatically expanded (Inst. C.E., Oct., 1901.)

3. Explain briefly, with a sketch, some form of steam superheater, and state any precautions which should be taken in the production of highly superheated steam. Why is less superheated steam required per hour per horse-power than when saturated steam is used ? (Inst. M.E., April, 1914.)

4. Why is it economical to use superheated steam ? Show from a sketch on the temperature-entropy diagram that the thermo-dynamic advantage of superheating is not of much importance. (Bd. of Ed., Stage III., 1911.)

IX. CONDENSERS.

1. An engine uses 20 lbs. of steam per hour per I.H.P. How much heat enters the condenser per hour per horse-power if there is no radiation or leakage ? The temperature of the steam at the stop-valve is 328° F.

Ans. 21,063 units of heat.

2. The temperature of the exhaust steam entering a jet condenser is 130° F. The temperature of the mixture after condensation of the steam is 85° F. ; the initial temperature of the cold-water jet is 45° F. Find the pounds of condensing water required per pound of steam condensed. *Ans.* 26·7 lbs.

3. The temperature of the exhaust steam entering a surface condenser is 120° F. The temperature after condensation is 100° F. The initial temperature of the circulating water is 50° F., and the final temperature 85° F. Find the pounds of circulating water required per pound of steam condensed. *Ans.* 30 lbs.

4. Explain the terms "heat expended," "heat rejected," and state the relation which exists between these quantities and the work done by a heat-engine. In a stationary condensing engine the condensation is effected by the injection of cold water into the condenser. The net quantity injected is 10 cub. ft. per I.H.P. per hour, and the rise of temperature on entering the condenser is 30° F. Find what fraction of the whole heat expended (neglecting radiation and leakage) is usefully employed. (Inst. C.E., Feb., 1899.) *Ans.* 11·96 per cent.

5. Make a sectional sketch of any form of air-pump.

A steam turbine using 12 lbs. of steam per horse-power hour develops 5000 horse-power. The pressure of the steam as it enters the condenser is 1 lb. per square inch absolute, and its dryness fraction is 0·7, and the temperature of the

condensed steam leaving the condenser is 33° C. The rise of temperature of the condensing water is 16° C. How much water does the circulating pump deliver to the condonser per hour? Temperature of steam at 1 lb. pressure is 38·7° C., and this may be taken equal to the water heat. Latent heat of steam at 1 lb. pressure is 574 lb.-calories. (Bd. of Ed., 1914, Lower.) [Note 1 lb.-calorie = $\frac{9}{5}$ B.Th.U.] *Ans.* 1,529,000 lbs.

6. Explain, with a sketch, the principle of the jet condenser. Find the weight of water required to condense 1 lb. of dry steam at 125° F. if the initial temperature of the condensing water is 75° F., and the final temperature is 105° F. (Total heat of 1 lb. of dry steam at 125° F. from water at 32° F. = 1114 B.Th.U.) (Inst. M.E., April, 1914.) *Ans.* 31·7 lbs. per pound of steam.

X. FEED-WATER HEATERS.

1. Sketch and describe a feed-water heater.

What is the percentage gain when the boiler feed-water is heated from 50° F. to 230° F., the temperature of the steam in the boiler being 350° F.?

Ans. 19·7 per cent.

XI. GOVERNORS.

1. A loaded Watt governor. For simplicity take the framework to be a parallelogram ABCD, the axis being AC, the centres of the balls at B and D. If AB = BC = 1·2 ft., if the balls are 7 lbs. each, and the load is 150 lbs. ± 2 lbs. because of friction, find the range of speed from $r = 0{\cdot}5$ to $r = 0{\cdot}6$ ft. if r is distance of a ball from the axis. Wherein consists the usefulness of the load? (Bd. of Ed., Stage III., 1903.) *Ans.* Range of speed is 9·1 revs.

2. What is the centrifugal force of a ball of w lbs. at r ft. from an axis making n revolutions per minute?

The whole revolving mass of a governor is equivalent in its effect to that of two balls each weighing 8 lbs. The construction and loading of the governor and valve-gear are such that when each ball is at the distance r ft. from the axis of revolution, a force F lbs. acting radially outwards from each ball is necessary to maintain equilibrium. Two sets of experiments are made: in one F overcomes friction; in the other F is assisted by friction.

r	0·4	0·5	0·6
F overcoming friction	19·20	25·00	31·20
F helped by friction .	18·44	24·02	30 04

Find the highest and lowest speeds of the governor between these limiting values of r. That is, for each value of r find the speed at which the centrifugal force of a ball has the value F. Tabulate your answers. (Bd. of Ed., Stage II., 1901.)

Ans. C.F. = $0{\cdot}00034\ wrn^2$; highest speed, 138·2 revs.; lowest speed, 130·2 revs.

F overcoming friction	19·20	25·00	31·20
n	132·8	135·5	138·2
F helped by friction .	18·44	24·02	30·04
n	130·2	132·9	135·6

3. Choose a loaded pendulum governor or a Hartnell governor, and explain with sketches how it governs. Show how we find the speed corresponding to any position of the balls. (Bd. of Ed., Stage II., 1905).

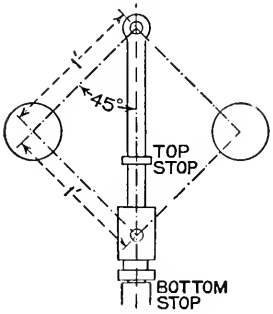

FIG. 492.

4. What is the object of loading a governor?

An equal armed governor is shown in Fig. 492, with the sleeve resting against bottom stop. Each ball weighs 4 lbs., and the sleeve itself weighs 14 lbs. At what speed will the sleeve just begin to leave the bottom stop? (Bd. of Ed., 1914, Lower.) *Ans.* 136·8 revs. per minute.

XII. TURNING EFFORT IN THE CRANK SHAFT.

1. What is a crank-effort diagram? What data are required to allow it to be drawn, and how is it applied in finding the fluctuations of speed in an engine when the dimensions and speed of the flywheel are known? (Inst. C.E., Feb., 1898.)

2. If a piston with its rod weighs 250 lbs., and if at a certain instant when the resultant total force due to steam pressures is 3 tons, the piston has an acceleration of 320 ft. per second per second in the same direction, what is the actual force acting on the crosshead? (Bd. of Ed., Stage II., 1905.) *Ans.* 4220 lbs.

3. If on a piston of 120 sq. in. area and weighing with piston-rod 290 lbs., there is at a certain instant a pressure of 130 lbs. per square inch on one side more than what there is on the other, and if the piston's acceleration at that instant is 420 ft. per second per second in the direction in which the steam is urging the piston, what is the total force acting at the crosshead? (Bd. of Ed., Stage II., 1900.)

Ans. 11,794 lbs.

4. Show how to find graphically the acceleration of the piston of a direct-acting engine in any position, the crank-pin being assumed to move uniformly. Sketch the form of the curve of acceleration (1) on a piston, and (2) on a crank angle base. Describe generally the influence of the inertia of the piston, rods, and crosshead on the stresses set up in the crank-pin. The weight of the reciprocating parts is equivalent to 3 lbs. per square inch of the area of the piston. If the length of the crank be 9 in., find how much the initial effective pressure is reduced by the inertia of the reciprocating parts when the crank makes 70 revolutions per minute, the obliquity of the connecting-rod being neglected. (Inst. C.E., Oct., 1900.)

Ans. 3·75 lbs. per square inch.

5. A piston and its rod and crosshead weigh 460 lbs. The engine makes 250 revolutions per minute, the crank is 1 ft. long. Make a diagram of the horizontal force at the crosshead at every point in the stroke: (1) assuming the connecting-rod infinitely long; (2) taking the connecting-rod to be 5 ft. long. State the force at some one place, so that your scale may be checked. Assume no friction. (Inst. C.E., Oct., 1898.)

6. Show how to find the acceleration of an engine-piston at each end of its stroke when the length of the connecting-rod, the length of the stroke, and the number of revolutions per minute are given. Find the force required for acceleration per pound mass of the piston, at each end of the stroke, in an engine with an 8-in. crank and 30-in. connecting-rod, making 300 revolutions per minute. (Inst. C.E., Oct., 1897.) *Ans.* 25·84 lbs. and 14·96 lbs.

7. If on a piston of 120 sq. in. in area, and weighing with piston-rod 290 lbs., there is at a certain instant a pressure of 130 lbs. per square inch on one side more than what there is on the other, and if the piston acceleration at that instant is 420 ft. per second per second in the direction in which the steam is urging the piston, what is the total force acting at the crosshead? If this acceleration occurs when the piston is one-quarter of its stroke from one end, assuming an infinitely long connecting-rod, how many revolutions per minute is the engine making? The crank is 1 ft. long. (Bd. of Ed., Stage III., 1900.)

Ans. 11,794 lbs.; 276·8 revs.

8. Crank 1 ft., connecting-rod 5 ft., 150 revolutions per minute: find the accelerations of the piston at the ends and at some other point of the stroke, and draw an acceleration diagram. The weight of piston and rod is 350 lbs., area of piston 150 sq. in. Draw possible indicator diagrams for the two sides of the piston, and show how we use them and the acceleration diagram to find the real force at the crosshead at every point of the stroke. (Bd. of Ed., Stage III., 1905.)

9. Piston 115 sq. in. in area. At the beginning of either stroke there is a difference of pressure of 90 lbs. per square inch on its two sides, producing total force in the direction in which the piston is about to move. The piston and its rod weigh 410 lbs. The engine makes 130 revolutions per minute; crank 1 ft. Neglecting angularity of connecting-rod, that is, assuming that the piston has a simple harmonic motion, what is the actual force at the crosshead at the beginning of either stroke?

What correction must be made when the angularity of the connecting-rod is not neglected? (Bd. of Ed., Stage III., 1903.) *Ans.* 7994 lbs.

10. Piston 115 sq. in. in area, crank 1 ft., connecting-rod 5 ft., 130 revolutions per minute. At the beginning of either stroke there is a difference of pressure of 90 lbs. per square inch on the sides of the piston, producing total force in the direction in which the piston is about to move. The piston and its rod weigh 410 lbs. What is the actual force at the crosshead at the beginning of either stroke? (Bd. of Ed., Hons., 1903.) *Ans.* 8465 lbs. and 7523 lbs.

11. If on a piston of 120 sq. in. area, weighing with piston-rod 290 lbs., there is at a certain instant a pressure of 130 lbs. per square inch on one side more than what there is on the other, and if the piston acceleration is 420 ft. per second per second in the direction in which the steam is urging the piston, what is the total force acting at the crosshead?

If the crank is 1 ft. long and the connecting-rod is 5 ft. long, and if the above acceleration occurs at the inner dead-point position, find the speed of the engine. (Bd. of Ed., Hons., 1900.) *Ans.* 11,794 lbs.; 215·2 revs. per minute.

12. Explain what is meant by the pressure due to the inertia of the reciprocating parts in a steam-engine, and show how it modifies the effective crank effort at different points of the stroke. If the revolutions are 400 and the mean piston speed 1200 ft. per minute show that with a 4 to 1 rod, the maximum inertia pressure is very approximately 50 times the weight of the reciprocating parts. (C. & G., Hons., Sec. B, 1903.)

Ans. The maximum force required to accelerate the reciprocating parts is required when the piston is at the head end of the cylinder.

The force required to accelerate the reciprocating parts at this point is given by the formula $\frac{Wv^2}{gr}\left(1+\frac{1}{n}\right)$, which may also be written

$$0{\cdot}00034WrN^2\left(1+\frac{1}{n}\right)$$

Substituting the values given in the question, the maximum force

$$= 0{\cdot}00034 \times W \times \tfrac{3}{4} \times 400 \times 400 \times \tfrac{5}{4}$$
$$= 51W$$

13. In a steam-engine the weight of the reciprocating parts is 500 lbs.; stroke, 2 ft.; revolutions, 180 per minute; connecting-rod, 4 feet long.

Find the force to accelerate the piston, (1) at the beginning of the stroke, (2) at the end of the stroke, and (3) when the crank is 90° from the dead centre. (Inst. M.E., April, 1914.)

Ans. Head end, 6895 lbs.; crank end, 4136 lbs.; at 90° from dead centre – 1379 lbs.

XIII. FLYWHEELS.

1. The crank-shaft of a gas-engine is giving out steadily 20 horse-power at an average speed of 150 revolutions per minute. When there are 75 explosions per minute (each cycle being two revolutions), about how much energy is being stored

and restored by the flywheel? If the kinetic energy of the flywheel at 150 revolutions is 250,000 foot-lbs., what are the highest and lowest speeds? (Bd. of Ed., Stage II., 1904.) *Ans.* 150·99 and 149·01.

2. The flywheel of a rolling-mill engine is observed to change its speed from 100 revolutions per minute to 70 revolutions per minute in 5 seconds when a billet is passed into the rolls. The moment of inertia of the flywheel is equivalent to 30 tons at a radius of 10 ft. Find the average torque exerted on the crank-shaft due to the energy drawn from the flywheel in addition to the torque exerted by the connecting-rods.

Sketch the form of the crank-effort diagram for a single-cylinder double-acting engine, and explain how you would proceed to draw this diagram from a given indicator card. (Bd. of Ed., 1914, Higher.) *Ans.* 131,040 lbs.-ft.

3. Briefly explain how the fluctuation of the speed of a crank-shaft is kept within narrow limits by means of a flywheel.

What must be the size of a flywheel in order that the maximum speed may not exceed the mean speed of 60 revolutions per minute by more than 0·2 revolution per minute when the area of the crank-effort curve cut off by the mean crank-effort line represents 50 ft.-tons. Give the mean radius of the flywheel and the weight in tons of the rim, and work out the dimensions on the assumption that the mass of the wheel is all concentrated at the mean radius of the wheel, and that the speed at the mean radius is limited to 100 ft. per second. (Bd. of Ed., 1912, Higher.)

Ans. Radius of flywheel = 15·85 ft.
Weight of flywheel = 48·55 tons, assuming cast iron weighs 450 lbs. per cubic foot.
Cross-section of rim, 349 cub. in.; say 12 in. by 29·08 in.

XIV. BALANCING THE ENGINE.

1. Describe the usual balancing of an inside cylinder locomotive, and what it really effects. (Inst. C.E., Oct., 1898.)

2. Two engines with the same centre line on opposite sides of a crank-shaft; same moving masses; cranks exactly opposite, so that there is exact balance of horizontal inertia forces: what may be done to the connecting-rods to make perfect inertia balance? Prove your statement. Is the engine perfectly balanced now? (Bd. of Ed., Stage III., 1901.)

3. An outline sketch of the crank-shaft of a four-cylinder engine is shown in figure below. The middle pair of cranks are set at 105° with one another, and the reciprocating parts weigh 1·125 tons for cylinder 2, and 1 ton for cylinder 3. Find the weight of the reciprocating parts for cylinders No. 1 and No. 4, and the angles between the cranks No. 1 and No. 4 and between the cranks No. 1 and No. 3, so that the reciprocating parts of the engine may be in balance amongst themselves. (Bd. of Ed., 1914, Higher.)

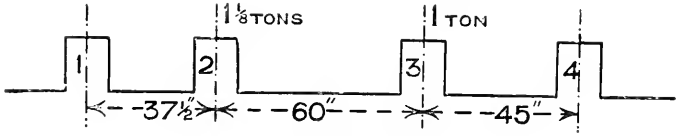

FIG. 433.

Answer.—

No. of crank.	Distance of centre of crank from reference plane.	Weight in tons.	Moment about reference plane.
1	0	0·3	0
2	37·5 ins.	1·125	42·2
3	97·5 ,,	1·0	97·5
4	142·5 ,,	0·671	95·6

(*See over.*)

The plane of No. 1 crank is taken as the reference plane.

Fig. 494 shows the angles between the cranks.

4. The reciprocating masses for the first, second, and third cylinders of a four-cylinder engine are 4, 6, 8 tons, and the centre lines of these cylinders are 13 feet, 9 feet, and 4 feet respectively from that of the fourth cylinder. Find the fourth reciprocating mass, and the angles between the various cranks in order that they may be balanced. (Bd. of Ed., 1912.)

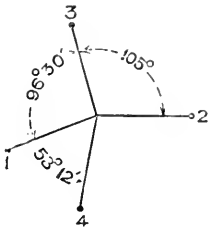

FIG. 494.

Ans. Fourth reciprocating mass = 5·2 tons. The angle between the first and second crank, is 141°; between the first and third crank, 255°, and between the first and fourth crank, 55°.

5. Give any one method for finding the acceleration of the piston masses in a reciprocating engine, and roughly plot the acceleration curve from the following data:—

Reciprocating masses weigh 650 lbs.

Stroke, 2 ft.

Connecting-rod, 4 ft. long.

Speed, 200 revolutions per minute

Write down the acceleration at the beginning and at the end of the stroke. (Bd. of Ed., 1912.) *Ans.* 548 and 329 ft. per second per sec.

6. In a three-cylinder engine the distance between the centre and left-hand cylinder is 18 inches, and between the centre and right-hand cylinder is 24 inches, and the stroke is 30 inches. The reciprocating parts of each cylinder weigh 300 lbs., and the cranks make 120° with each other. Find the maximum value of the unbalanced force and the unbalanced couple when the engine is making 200 revolutions per minute. (Bd. of Ed., 1913.)

Ans. No unbalanced force. Unbalanced couple, 15,000 ft.-lbs.

7. The sketch (Fig. 495) shows certain dimensions of the crank-axle of an inside cylinder locomotive. All the revolving masses and two-thirds of the reciprocating masses are to be balanced by masses placed in the wheels at a radius of 30 in. Find the balance weights. Calculate the maximum value of the vertical force acting on the rails due to one balance weight when the engine is running at 60 miles per hour.

Diameter of driving wheel, 7 ft.

Stroke, 24 in.

Reciprocating mass per cylinder, 600 lbs.

Unbalanced revolving mass per crank at crank radius, 650 lbs. (Bd. of Ed., 1913, Higher.)

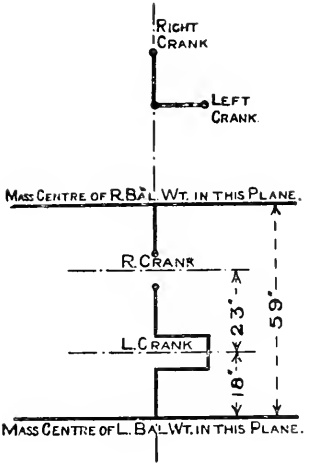

FIG. 495.

Answer.—

No. of crank or reference plane.	Reciprocating weight in lbs.	Revolving weight in lbs.	Radius in inches.	Distance of crank from reference plane.	Weight × radius.	Moment about reference plane.
1	—	318·6	30	0	9,560	0
2	400	650	12	18	12,600	226,800
3	400	650	12	41	12,600	516,600
4	—	318·6	30	59	9,560	564,000

The right balance weight weighs 318·6 lbs., and is placed at an angle of 156° 19′ measured anti-clockwise from the right crank. The left balance weight weighs 318·6 lbs., and is placed at an angle of 203° 41′ measured anti-clockwise from the left crank. Vertical force due to one balance weight (not the resultant force) is 15,600 lbs.

XV. STEAM-ENGINE PERFORMANCE.

1. If a steam-engine work between the limits of 350° F. and 212° F., what would be its maximum possible efficiency (*a*) on the Carnot cycle, (*b*) on the Clausius cycle? State any reasons for choosing one or the other as the standard of efficiency under given conditions. (Inst. C.E., Oct., 1897.)

Ans. (1) 0·170; (2) 0·159.

2. The total steam used by an engine was 660 lbs. per hour when the I.H.P. was 20, and 2100 lbs. per hour when the I.H.P. was 100. Assuming Willan's straight-line law to hold, find the consumption of steam per I.H.P. and per B.H.P. hour, when the engine indicates 25 H.P. and 80 H.P. respectively. You may assume that the power required to overcome the friction of the engine is 17 I.H.P. at all loads. This may be solved graphically by setting off the lines to scale in your answer-book, or it may be calculated. (Inst. C.E., Feb., 1902.)

3. A particular non-condensing steam-engine working with 170 lbs. per square inch absolute pressure requires 19 lbs. of feed-water per I.H.P. per hour. A particular condensing steam-engine working with the same pressure and 24 in. vacuum requires 17 lbs. of feed-water per I.H.P. per hour. Show that the ratio of 17 to 19 does not truly represent the relative thermal economy of these two engines, and obtain the true comparison on the basis of heat-units supplied per I.H.P.

Data.

	B T.U.
Total heat of steam at 170 lbs. per square inch absolute pressure .	1194
Water heat at 212° F.	181
Water heat at 24 in. vacuum	110

(Inst. C.E., Oct., 1899.)

If a steam-engine were supplied with steam at 180 lbs. pressure absolute ($t = 373°$ F.), and had a condenser temperature of 126° F., how many thermal units would you have to supply to it per I.H.P. per hour if it could turn into work 50 per cent. as much as an ideal Carnot engine working between the same limits? (Inst. C.E., Feb., 1898.)

Ans. 17,200 units of heat from feed-water at 126° F.

4. What is meant by the "Willan's law" for a steam-engine? Show briefly how this law enables you to predict the economy of a given steam-engine under varying conditions. (Inst. C.E., Feb., 1903.)

5. What is the Willan's rule as to the horse-power and water used? Show that it is reasonable to expect such a rule to hold. (Bd. of Ed., Hons., 1903.)

6. A non-condensing engine uses 4000 lbs. of dry saturated steam per hour at 160° C.; feed-water at 20° C.; the indicated horse-power is 210. What is the efficiency? How much work is done per pound of steam? If a perfect steam-engine works on the Rankine cycle between 100° C. and 160° C., what work is hypothetically possible per pound of steam? Use the table of numbers given in III. No. 13. (Bd. of Ed., Stage III., 1901.)

Ans. Efficiency, 11·7 per cent.; 103,950 foot-lbs.; 101,600 foot-lbs.

7. A steam-engine works on the Rankine cycle. Prove that the work done per pound of steam is—

$$L_1\left(\frac{T_1 - T_0}{T_1}\right) + T_1 - T_0 - T_0 \log_\epsilon \frac{T_1}{T_0}$$

where T_1 and T_0 are the upper and lower temperatures respectively. (Inst. C.E., 1904.)

8. A non-condensing engine uses 4600 lbs. of dry saturated steam per hour at

160° C.; the indicated horse-power is 200: how much work is done per pound of steam? If a perfect steam-engine works on the Rankine cycle between 100° and 160° C., what work is hypothetically possible per pound of steam? (Bd. of Ed., Stage III., 1905.) *Ans.* 86,100 foot-lbs.; 99,560 foot-lbs.

9. In a certain engine trial it was found that temperature of boiler = 370° F.; feed-water used = 14 lbs. per I.H.P. per hour; temperature of feed = 115° F. Assuming the boiler to supply dry steam, find the expenditure of heat in thermal units per I.H.P. per minute, and compare it with the work done. (Inst. C.E., Oct., 1898.)

10. Describe the Rankine-Clausius cycle, and show it on a $\theta\phi$ chart. It is found from tables that an engine working on a Rankine-Clausius cycle with maximum efficiency between temperatures 350° F. and 120° F. takes 9900 B.T.U. per I.H.P. hour. Compare its efficiency with that of an engine working on a Carnot cycle with maximum efficiency between the same temperatures. What is the reason for the difference in the efficiencies? (Inst. C.E., 1905.)

Ans. 8974 B.T.U. required by Carnot cycle.
Carnot efficiency, 28·3 per cent.
Rankine efficiency, 25·8 per cent.

11. Find an expression for the work done per pound of steam in a steam-engine when the steam expands to a pressure higher than the back pressure. Neglect clearance, compression, and initial condensation. Assume the steam is dry during expansion (see p. 55).

Ans. Let ABCDE represent the indicator diagram, Fig. 496.

Let T_1 = absolute temperature of the steam at B.
T_2 = absolute temperature of the steam at D.
p_2 = absolute pressure of the steam at D.
p_3 = absolute pressure of the steam at E.
V_2 = volume of the cylinder in cubic feet.

The total work done is represented by the sum of the areas M and N.

Then area $M = \int v \cdot dp$ in foot-lbs.

where v = the volume of the steam per lb.

but $v = \frac{JL}{T} \cdot \frac{dT}{dP}$ (see p. 429).

$\therefore$ area $M = \int \frac{JL}{T} dT$

also $L = 1437 - 0{\cdot}7T$ (see equation (3), p. 54).

$\therefore$ area $M = J \int_{T_2}^{T_1} \frac{1437 - 0{\cdot}7T}{T} dT$ in foot-lbs.

$= 1437 \log_e \frac{T_1}{T_2} - 0{\cdot}7(T_1 - T_2)$ in heat-units.

Area $N = \frac{(p_2 - p_3)V_2 \times 144}{778}$ in heat-units.

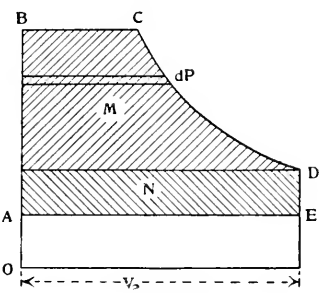

FIG. 496.

$\therefore$ Total work done = areas M + N

$= 1437 \log_e \frac{T_1}{T_2} - 0{\cdot}7(T_1 - T_2) + \frac{(p_2 - p_3)V_2 \times 144}{778}$.

12. Calculate from the steam tables the maximum work obtainable from 1 lb. of dry saturated steam when working between pressures of 100 and 2 lbs. per square inch absolute: (*a*) on the Rankine cycle; (*b*) on the Carnot cycle. Account for the difference obtained. (London B.Sc., 1912.)

Ans. Maximum work, Rankine cycle = 257·5 B.Th.U. per pound.
Maximum work, Carnot cycle = 225·5 B.Th.U. ,, ,,

13. What is the theoretical efficiency of a heat-engine working on the Carnot cycle? Explain why a theoretically perfect steam-engine, using highly superheated steam, has an efficiency considerably less than that of the Carnot cycle between the same temperatures. (I.C.E., Oct., 1910.)

14. In a steam-engine regulated by a throttling governor the steam-consumption at 100 H.P. was 2500 lbs. of steam per hour, and at 400 H.P. 6000 lbs. of steam per hour. Find the steam-consumption at 300 H.P. What law do

you assume in working out this example? Write down the equation connecting the horse-power and the steam used. (I.C.E., Oct., 1910.)

Ans. Assuming Willans law, $W = 1333 + 11{\cdot}67I$, where I is the horse-power of the engine. At 300 H.P., W = 4834 lbs.

15. Sketch *pv* and $t - \phi$ diagrams for the Rankine cycle. Explain where the following cycle differs from the Rankine cycle. Steam enters a cylinder at a pressure of 150 lbs. per square inch absolute and expands adiabatically to 10 lbs. per square inch absolute. Find the work done per pound of steam if the back pressure is 4 lbs. per square inch absolute. Neglect clearance, compression, and condensation. How many pounds of steam are required per hour per horse-power? (Sheffield Univ.)

Ans. Work per pound = 180,500 ft.-lbs.
Steam per hour per horse-power = 10·9 lbs.

16. In a trial of a triple-expansion engine the following observations were made:—

Steam pressure (absolute)	200 lbs. per square inch
Total heat per pound reckoned from water at 0° C. (32° F.)	{ 669·8 C.H.U. (1205·6 B.Th.U.)
Weight of steam entering cylinders per hour	1200 lbs.
Indicated horse power	73·8 ,,

The steam entered a surface condenser and was condensed at a temperature of 56° C. (133° F.), and it was found that 24,000 lbs. of condensing water per hour were raised through a temperature of 24° C. (43·2° F.). Determine the gross supply of heat per minute to the engine, the heat equivalent to the I.H.P., and the heat leaving the engine in the exhaust steam reckoned from 0° C. (32° F.).

Determine the amount not accounted for by radiation loss and errors of experiment, and show your results in the form of a balance-sheet. (London, B.Sc. Eng., 1913.)

Answer.—

Gross supply of heat to the engine per minute (above 32° F.)

$$= \frac{1200}{60} \times 1205{\cdot}6 = 24112 \text{ B.Th.U.}$$

heat equivalent to the I.H.P. per minute $= 73{\cdot}8 \times \frac{33000}{778}$

$$= 3130 \text{ B.Th.U.}$$

heat to condensing water per minute $= \frac{24000}{60} \times 43{\cdot}2$

$$= 17280 \text{ B.Th.U.}$$

heat in condensed steam discharged per minute $= \frac{12000}{60}(133 - 32)$

$$= 2020 \text{ B.Th.U.}$$

BALANCE-SHEET.

	B.Th.U. per minute.		B Th.U. per minute.
Gross supply of heat to engine .	24,112	Heat equivalent to I.H.P. . .	3,130
		Heat to condensing water . .	17,280
		Heat in condensed steam . .	2,020
		Radiation loss and errors of experiment	1,682
	24,112		24,112

17. Sketch a *pv* and $t\phi$ diagram for a steam-engine working on the Rankine cycle. The admission pressure of steam to a reciprocating engine is 140 lbs. per

square inch absolute, and the pressure at the end of expansion is 30 lbs.; exhaust pressure, 17 lbs. Find the minimum weight of steam required per hour per horse-power. Where does the above cycle differ from the Rankine cycle? (Sheffield Univ., 1914.)

Ans. 17·3 lbs.

XVI. THE STEAM-TURBINE.

1. There are steam-turbines on the so-called *reaction* principle like Parsons', and others on the so-called *impulse* principle like Laval's. Describe how they differ (in the behaviour of the fluid passing through the moving vanes), and show in each case how the rule arises as to speed of wheel compared with speed of fluid before entering the wheel. Why is a very perfect vacuum more important in a turbine than in a reciprocating steam-engine? (Bd. of Ed., Hons., 1905.)

2. Describe with sketches *either* (*a*) a Parsons steam-turbine, or (*b*) a de Laval steam-turbine. To what extent and for what reasons is the efficiency of the turbine you describe affected by the use of superheated steam and by a high vacuum in the condenser? (Inst. C.E., 1905.)

3. Sketch and describe any one form of steam turbine with which you are familiar.

Steam issues from a fixed nozzle of an impulse turbine at a speed of 3000 feet per second on to a ring of turbine blades. The nozzle is inclined 30 degrees to the plane of rotation of the vanes. The circumferential velocity of the vanes is 1000 ft. per second. Find the angle of the vane at the receiving lip so that the steam flows on to the vane from the nozzle without shock. Find the angle of the discharging lip of the vane so that the pressure exerted on the vane is in the direction of the vane's motion. And find the work done per pound of steam flowing from the nozzle. Find also the maximum amount of work which could be done by the jet per pound of flow. (Bd. of Ed., 1914, Higher.)

Ans. From the velocity diagram the absolute velocity of the steam leaving the wheel = 1615 ft. per second.

$$\text{Work per pound of steam} = \frac{(3000)^2}{2 \times 32{\cdot}2} - \frac{(1615)^2}{2 \times 32{\cdot}2}$$
$$= 99{,}260 \text{ ft.-lbs.}$$

$$\text{maximum work per pound of steam} = \frac{3000 \times 3000}{2 \times 32{\cdot}2}$$
$$= 139{,}700 \text{ ft.-lbs.}$$

Inlet and outlet angles of the vanes to prevent end thrust (neglecting friction) = 43° 14′.

4. Explain, with sketches, the construction of the rotor of a Parsons turbine and the method of fixing the blades in the rotor.

If steam leaves the guide and rotor blades of this turbine at 300 ft. per second relatively to the blades in each case, draw the velocity diagram, find the inlet angle and the heat given up per pound of steam in each row of blades. The mean speed of the rotor blades is 150 ft. per second, and the exit angle of the blades is 30°. Neglect all losses. (I.C.E., Feb., 1911.)

Ans. Inlet angle, 54°; heat given up = 1·09 B.Th.U.

5. Show, by sketches of the "total heat-entropy," or "Mollier," diagram, how the following required data may be determined:—

(*a*) The dryness or superheat of steam which expands through a throttling valve without loss of total heat.

(*b*) The work done by 1 lb. of steam expanding adiabatically from a given pressure and with a given amount of superheat or wetness to a lower pressure.

(*c*) The dryness of steam after expansion in a nozzle when the efficiency of the nozzle is known.

(*d*) The original condition of steam which has passed through a throttling calorimeter, when the pressure and superheat of the steam are known at the end of the expansion. (London B.Sc., 1912.)

6. Find an expression for the velocity acquired by steam when expanding in a nozzle, neglecting losses.

In a Parsons steam turbine the heat drop per pound of steam in the moving

and stationary blades is the same and equal to 6 B.Th.U. per minute in each; the mean velocity of the blades is 275 ft. per second. Determine the velocity of the steam entering the blades; the work done in each set of blades; the degree of reaction, the efficiency and the horse-power developed per stage, assuming no losses. Take the exit angles of the blades, 20°. (Sheffield Univ.)

Ans. $V = 224\sqrt{B\text{Th.U.}}$; V = 549 ft. per second.

Work done in moving blades = 4668 ft.-lbs.
Work done in stationary blades = 4668 ft.-lbs.
Reaction = 0·5.
Efficiency = 0·75.
Horse-power per stage = 12·8.

7. Dry steam at an initial pressure of 120 lbs. per square inch absolute, is expanded adiabatically down to 30 lbs. pressure absolute in a nozzle which allows 0·4 lb. to pass through it per second. Determine the dryness of the steam and the sectional area of the nozzle at the lower pressure, using the data given in the accompanying table :—

Pressure. lbs./□′.	Temp. Fahr.	Heat of formation.	Vol. of 1 lb. cub. feet.	ϕ_w	ϕ_s
30	250·5	1158·3	13·72	0·368	1·687
120	341·0	1186·0	3·74	0·491	1·582

(Sheff. Univ.) *Ans.* Dryness = 0·92; area = 0·6194 sq. in.

8. Steam enters the nozzles of an impulse turbine from rest, and there is a loss of 10 per cent. of the available heat energy of 19 B.Th.U. The peripheral speed of the wheel is 380 ft. per second. The nozzles are inclined to the wheel at an angle of 20°. Find the combined efficiency of the blades and nozzles, assuming the blades are symmetrical and that the exit velocity of the steam is 85 per cent. of the inlet velocity. (Sheff. Univ.) *Ans.* Efficiency = 0·725.

9. Find an expression for the work done per pound of steam in a De Laval turbine having equal outlet and inlet blade angles. Neglect all losses. Find an expression for the maximum efficiency.

Draw the velocity diagram for a De Laval turbine having the nozzles inclined to the blades of the wheel at an angle of 20°, and determine the efficiency if the steam velocity is 2400 ft. per second; the peripheral velocity of the rim being 1000 ft. per second. What is the inlet angle of the blades for the steam to enter without shock? (Sheffield Univ.) *Ans.* $\theta = 32°$; efficiency, 0·87.

10. Dry steam expands adiabatically from 160 lbs. per square inch absolute to 15 lbs. absolute. Find the dryness of the steam after expansion and the heat converted into work per pound of steam.

Wet steam at a pressure of 200 lbs. per square inch absolute passes through a throttling calorimeter where the pressure is 21 lbs. absolute and the superheat 25°. Find the dryness of the steam before expansion. (You may use your Mollier chart for these examples.) (Sheffield Univ.)

Ans. Dryness after expansion = 0·87.
Heat converted into work per pound = 172 B.Th.U.
Dryness of steam before expansion = 0·96.

11. Dry steam at a pressure of 100 lbs. per square inch absolute is expanded adiabatically in a properly designed nozzle to 2 lbs. per square inch absolute. The heat drop is 225 B.Th.U., and 90 per cent. of this is converted into kinetic energy. Find the velocity of the steam at exit, neglecting any initial velocity, and find also the quality of the steam at exit. (Sheffield Univ.)

Ans. 3187 ft. per second; dryness, 0·85.

12. If the adiabatic expansion of dry steam is given by $pv^{1\cdot135}$ = constant, and if the density of dry steam is given by $\lambda P^{0\cdot94}$, where λ is constant, show that the dryness of dry saturated steam after adiabatic expansion from P_1 to P_2 is given by $\left(\frac{P_2}{P_1}\right)^{\cdot059}$.

Hence show that if the expansion is adiabatic the dryness of the steam at the

throat of a convergent divergent nozzle of the De Laval type is about 0·97, the steam being dry saturated at the entry to the nozzle. (Sheffield Univ.)

Answer.— $P_1V_1^{1\cdot135} = P_2V_2^{1\cdot135}$ (1)

where V_2 = volume of wet steam after expansion.

$$\text{Density} = \frac{1}{V_1}$$

$$\therefore \frac{1}{V_1} = \lambda P_1^{0\cdot94} \qquad (2)$$

$$\text{and } \frac{1}{V} = \lambda P_2^{0\cdot94} \qquad (3)$$

where V = volume of dry steam at P_2

$$\div \text{ (2) by (3) } \frac{V}{V_1} = \left(\frac{P_1}{P_2}\right)^{0\cdot94}$$

$$\text{also } V_1 = \left(\frac{P_2}{P_1}\right)^{\frac{1}{1\cdot135}} V_2$$

Substituting for V_1 and inverting—

$$\frac{V_2}{V} = \frac{\left(\frac{P_2}{P_1}\right)^{0\cdot94}}{\left(\frac{P_2}{P_1}\right)^{\frac{1}{1\cdot135}}} = \left(\frac{P_2}{P_1}\right)^{0\cdot059}$$

The relation between P_1 and P_2 at the throat of a De Laval nozzle is given by—

$$\left(\frac{P_2}{P_1}\right) = 0\cdot575 \text{ (p. 398).}$$

$$\therefore \text{ dryness at the throat} = (0\cdot575)^{0\cdot059}$$
$$= 0\cdot97$$

13. Dry steam enters the fixed blades of a Parsons turbine at 160 lbs. per square inch and expands adiabatically to 150 lbs.; the steam further falls to 140 lbs. in the moving blades. Draw the velocity diagram, assuming the exit angles to be 25° and the peripheral speed to be 200 feet per second. You may use the Mollier chart. (Sheff. Univ.)

14. In a section of a turbine of the Parsons type an expansion consists of n rings of moving blades. It is arranged to have equal heat drops in fixed and moving blades. Express the work done per pound of steam on the moving blades in terms of the peripheral velocity u, the steam velocity v, and the exit angle of the blades θ. If $n = 7$, $u = 150$ ft. per second, $v = 375$ ft. per second, $\theta = 20°$, and if the weight of steam passing through the blading is 40 lbs. per second, find the horse-power developed in the section. (Sheff. Univ., 1913.)

Ans. Horse-power = 1316.

15. Show how to determine, by aid of a Tϕ diagram, the dryness fraction of steam when expanded adiabatically. Dry steam, at an initial pressure of 100 lbs. per square inch absolute, is expanded adiabatically down to 20 lbs. absolute in a nozzle which allows 1 lb. to pass through it per second. Determine the dryness of the steam and the sectional area of the nozzle at the lower pressure, using the data given in the accompanying table:—

Pressure in pounds per square inch.	Temperature.	Total heat.	Volume, cubic feet.	Entropy.	
				Water.	Steam.
20	108·9° C. (228° F.)	643·2 C.H.U. (1157·8 B.Th.U.)	20·0	0·337	1·735
100	164·2° C. (327·6° F.)	662·0 C.H.U. (1191·6 B.Th.U.)	4·44	0·475	1·609

(London B.Sc. Eng., 1913.)

Ans. Dryness after expansion = 0·91.
Volume after expansion = 18·198 cub. ft.
Area of nozzle at lower pressure = 1·069 sq. in.

16. Steam enters the nozzle of a De Laval turbine and expands to the condenser pressure. The theoretical heat drop is 230 B.Th.U. per pound, but 10 per cent. of the energy is lost in friction. Draw the velocity-diagram of the steam passing through the turbine if the relative velocity at exit is 85 per cent. of the inlet velocity. Find the efficiency of the nozzle and vanes, assuming the steam enters the vanes without shock, and that the inlet and outlet angles of the vanes are equal. The peripheral velocity of the wheel is 1200 ft. per second. The nozzles are inclined at an angle of 20° to the plane of the wheel. (Inst. C.E., October, 1913.) *Ans.* Efficiency of nozzle and vanes, 0·70.

17. What is the principle involved in the calculation of the velocity with which steam issues from a nozzle, assuming that the flow is adiabatic and frictionless?

Dry saturated steam, at 150 lbs. pressure per square inch absolute, is supplied to a nozzle and flows through it into a condenser where the pressure is 3 lbs. per square inch absolute. Assuming that the flow is frictionless and adiabatic, find the velocity with which the steam issues from the nozzle; the wetness of the steam; and the discharge in pounds per minute per square inch of the minimum cross-section of the nozzle. (Bd. of Ed., 1913, Higher.)

Ans. Velocity = 3620 ft. per second.
Dryness = 0·81.

$$\text{Discharge per minute} = W = \frac{ap_1 \times 60}{70} = 128{\cdot}6 \text{ lbs. per minute.}$$

INDEX

A.

Absolute temperature, definition of, 8
Acceleration of reciprocating parts, 238
—— diagrams, 242
—— ——, Klein, 283
Action of jet upon vane 385
Adiabatic expansion, 13
Advance, angle of, 65
Air-pump, Edwards, 190
Area of turbine steam passages, 391, 414
Automatic expansion *v.* throttling, 312

B.

Balance weights, 287
Balancing of engines, 277
—— ——, Dalby on, 295
Bearings, main, 271
——, Dewrance on, 271
Belliss engine, 353
Boulvin's temperature-entropy diagram, 302
Boyle's law, 7
Brake horse-power, definition of, 2
British thermal unit, 5

C.

Calorimeters, 34
Carnot's cycle, 19
Charles, law of, 8
Clausius cycle, 58
Clearance, 101
—— surface, polished, 165
Combining indicator diagrams, 144
Compound engine, 125
—— ——, distribution of work in, 128
—— ——, indicator diagrams, 144
—— ——, ratio of cylinders, 139
—— ——, size of, 137
Compounding, methods of, 126
Compression, 161, 163
——, work done during, 18
Condensation, 168
—— in turbines, 442
Condensers, 179
Condensing-water coolers, 188
Connecting-rod, obliquity of, 67, 228
Connecting-rods, 263
—— ——, Sisson's, 271
Corliss engine, 331
—— ——, performance of, 345
—— ——, trip gear, 334, 341
—— —— valves, to set, 335
Cornish cycle, 318
Crank-pin, tangential pressures, 229
Crank-shaft, turning effort in, 227
Cranks, combination of, effect on twisting moment, 233
Cross-heads, 259
Curtis turbine, 408
Curves, adiabatic, 39
——, constant-volume, 45
——, hyperbolic, 39
—— of steam-consumption, 314
——, saturation, 39
Cylinder liners, 253
—— patterns, 253
Cylinders, 252
——, internal surface of, 164

D.

Davey on steam-engine performance, 317
De Laval turbine, 405
Dewrance on bearings, 271
Diagram factors, 136
Drummond on high pressures in locomotives, 307
Dry-steam fraction, 115

E.

Eccentric, 65
Economical load, the most, 313
Efficiency, 2, 275
——, mechanical, 275
—— of steam in turbines, 439
——, thermal, report of Committee Inst. C.E., 300

Ejector condenser, the, 186
Electrical units, 2
Engine frames, 274
Entropy, 41
—— chart, Plate I.
——, table of, 458
Equivalent eccentric, 81
Evaporation, equivalent, 33
Evaporative condenser, the, 187
Expansion, adiabatic, 13
——, isothermal, 12
—— regulator, 79
——, useful limit of, 105
—— valve gear, 76
—— ——, Meyer, 84

F.

Feed heating from receiver, 192
—— water filters, 196
—— —— heaters, 191
Five-crank engine, 365
Flywheels, 245
——, weight of, 246
Frames of engines, 274
Friction, 275
——, distribution of, 276
—— in turbines, 443

G.

Gases, specific heat of, 10
Goss on locomotive performance, 383
Governors, 200

H.

Hartnell governor, 216
Heat accumulator, 421
——, efficiency of, 23
—— energy areas, 15
—— exchange areas, 123
Hirn's analysis, 120
Horse-power, definition of, 2

I.

Impulse turbines, 405
Inchmona's engines, 365
Increase of initial steam-pressures, 306
Independent condenser, 184
Indicated horse-power, 2, 106
Indicator, the, 90
—— diagrams, 98, 134
—— ——, correction for inertia, 237, 243
——, reducing motions, 95
Inertia, definition of, 237
——, effects on crank effort, 239
——, balancing effects, 277
Initial condensation, 111, 168
Injector, the, 172
——, efficiency of, 176
——, automatic, 177
Internal energy, 9
Isothermal expansion, 12

J.

Jacket. *See* Steam-jacket
Joule's law, 9
Joy's valve-gear, 374, 377

K.

Kershaw's acceleration curve, 285
Kinetic head, 389
Klein's diagram of acceleration, 283

L.

Labyrinth glands, 419
Lap of valve, 60
Latent heat, 28
Lead of valve, 60
Liners of cylinders, 253
Link motion, 77, 376
Load factor, 316
——, rated, 315
Locomotive, the, 368
——, compound, 382
Logarithms, hyperbolic, 422
Lubrication, Dewrance on, 271
—— in turbines, 449
Lubricator, sight-feed, 198

M.

Marine engines, 363
Mean pressure, 107, 136
—— —— indicator, 451
—— —— ratios, 457
Mechanical efficiency, 275
Metallic gland-packing, 255
Meyer expansion valve, 84
Mill engines, 363
Mollier diagram, 422

N.

Napier's formula, 174, 397
—— ——, proof of, 397
Nozzles for turbines, 396
Nozzle design, 399

P.

Parsons' steam turbine, 410
Patterns for cylinders, 235
Peache engine, 351
Performance of steam-engines, 300, 345, 366, 380

Pickering governor, 218
Piston-valves, 256
—— velocities, 227
Pistons, 256
Power, definition of, 2
Pressure head, 389
Pressures, increase of, on the, 306
Proell governor, 217
—— valve gear, 329

Q.

Quality of steam, 110
Questions, 459
Quick-revolution engines, 318

R.

Rankine cycle, 58
Rated load, 315
Reciprocating parts, acceleration of, 238
Reducing valves, reduction of pressure by, 308
Re-evaporation, 112
Regulator valve, 378
Reuleaux diagrams, 71, 88
Reversibility, 22
Rigg, tests of Westinghouse engine, 316
Ripper's mean-pressure indicator, 417
Rotation, effect of speed of, 317

S.

Safety-valve for locomotive, 378
Saturated steam pressure and temperature, 26
Saturation curve applied to indicator diagram, 116
Scott-King design for high-speed engines, 357
Separator, the, 111
Shaft governor, 218
Short-stroke cylinder surface, 164
Sight-feed lubricator, 198
Single-acting engines, 348, 351
—— and double-acting engines, stresses on pins, 361
Sisson's connecting-rod, 271
—— engine, 360
Slide-valve, 60
——, balanced, 63
——, double-ported, 62
——, piston, 63
Specific heat, definition of, 5
—— —— of gases, 10
Springs, 221
Steam, condensation due to expansion of, 114
——, consumption curves of, 314
Steam, density and volume of, 32
——, dryness tests for, 34
—— engine performance, 300
——, flow of, 56
——, formulæ for work done per pound, 54
—— jacket, 166
—— pressure, increase of, 306
——, properties of, 25
——, specific heat of, 27
——, "state point" of, 53
——, superheated, 146
—— tables, 420
—— ——, total heat of, 28
——, weight of, accounted for by indicator, 115
——, ——, used by the engine, 305
Superheated steam, 116
—— ——, efficiency of, 148
—— ——, gain by, 151
—— ——, lubrication with, 151
—— ——, performance of, 317
—— ——, regulation of, 162
—— ——, specific heat of, 147
—— ——, total heat of, 147
—— ——, in turbines, 443
Superheaters, 158

T.

Tangential pressure on crank, 229
Temperature, absolute, 8
——, definition of, 6
——, mean, of cylinder walls, 113
——, range of, 113
Temperature-entropy diagrams, 41, 118, 148, 474
——, ——, applications of, 46
Thermal efficiency of engines, 56
—— —— injector, 176
—— ——, report of Committee of Inst. C.E., 300
Thermal unit, British, 5
Thermodynamics, first law of, 6
—— of gases, 5
——, second law of, 7
Thom on marine engines, 365
Tractive force of locomotive, 379
Train resistance, 379
Turbine, Blading design, 423, 437
——, the De Laval, 405
——, Disc-Drum, 417
——, the Curtis, 408
——, Exhaust steam, 419
——, examples, 507
——, the Steam, 385
——, Parson's steam, 410
——, the Westinghouse, 418
Turning effort on crankshaft, 227
Twisting moment, 230

U.

Unit of heat, definition of, 5
—— work, 1

V.

Vacuum augmenter, 441
—— in turbines, 441
—— gauge, 183
Valve diagram, ellipse, 73
—— ——, Reech, 71
—— ——, Reuleaux, 71
—— ——, Zeuner, 67
Valve displacement, 66
—— gear, 329
—— gears, expansion, 76
Valves, double-beat, 324
Vanes, action of jet upon, 385
Velocities, piston, 227
——, diagrams of, 393, 397, 401, 404, 427, 432, 436
——, steam, 389
Vibration in turbines, 449
Volume, pressure, and temperature, relation between, 14

W.

Walschaert valve gear, 485
Water, volume per pound, 25
——, specific heat of, 27
Westinghouse engine, results of trials, 316
Westinghouse turbine, 448
Willans engine, 349
—— straight line law, 309
Winding engine, 347
Work, definition of, 1
——, unit of, 1
—— during expansion, 11

Z.

Zeuner, valve diagram, 67, 483

THE END

PRINTED IN ENGLAND BY WILLIAM CLOWES AND SONS, LIMITED, BECCLES.

TJ
465
R48
1914

Ripper - Steam-engine theory & practice.

UNIVERSITY OF CALIFORNIA LIBRARY
Los Angeles

This book is DUE on the last date stamped below.

DEC 21 1955

APR 1 8 1956

JUL 29 1957

NOV 26 1958

APR 30 1965

MAR 10 19

Form L9–100m-9,'52(A3105)444

Engineering
Library

SOUTHERN REGIONAL LIBRARY

A 000 299 964 7

AUXILIARY
STA

72